[redacted]

DCN: 11302

BRAC 2005
Intelligence Joint Cross-Service Group

Meeting Minutes of September 10, 2003

The Deputy Assistant Secretary of Defense (Security and Information Operations) chaired this meeting. The agenda and list of attendees is attached.

The Chair opened the third meeting of the Intelligence JCSG asking the attendees to introduce themselves and state their level of security clearance. The Chair then stated it was the responsibility of the Services and the Defense Agencies to send individuals to the meeting who work in the function that is to be evaluated and that they should possess the required clearances. She stated the appropriate level of clearance to conduct the work of this JCSG should be at a minimum [redacted] Lastly, it was the desire of the Chair that the Services should provide administrative support to the group.

The Chair asked [redacted] to make administrative remarks. [redacted] asked the representative from the Office of General Counsel to clarify for the Group the intent of the ISG's direction as to the make up of the membership. OGC stated that the senior members consisted of one representative from each of the Services and the Joint Staff and their alternates. If it is the desire of the Chair to increase the membership to include representatives from Defense intelligence agencies, then a request to the Chairman of the Infrastructure Steering Group is required. The Chair then asked [redacted] to draft a request to add the four Defense intelligence agencies as participating members of the group.

The Chair asked for comments on the draft report for the ISG (attached). A lengthy discussion followed with consensus to add a fourth subgroup, Warfighting Capabilities and Customer Satisfaction, with the understanding that national policy consumers and operational forces would be included in this function. The subgroups will intertwine to produce one product integrated with an end-to-end architecture that has facility and real estate implications. The Chair then asked for volunteers to populate the four subgroups by 1200, Friday, September 12, 2003 with the expectation that each Service and Defense intelligence agency would be represented on each subgroup. The IJCSG Chair will choose the Chair for each subgroup.

[redacted] reviewed with the group the methodology to conduct capacity analysis using the handout (attached) as a guide. He further described the Air Force data collection tool to the group stating in his opinion it was not adequate for the IJCSG. The group discussed at length existing analytical and collection tools with the BRAC Office representatives providing clarification on the tools use in the BRAC process.

[redacted]

[redacted]

DCN: 11302

The group concluded that due to the nature of some of the intelligence data more information was required before a decision would be made as to which data collection tool would be used by the IJCSG.

The Chair announced the next meeting will be September 24, 2003.

Approved: _____
Carol A. Haave
Deputy Assistant Secretary of Defense
(Counterintelligence and Security)
Chair, Intelligence Joint Cross-Service Group

Attachments:

1. List of Attendees
2. Agenda
3. Memorandum for the Under Secretary of Defense (Acquisition, Technology, & Logistics) Establishment of the Intelligence Joint Cross-Service Group (Draft)
4. Capacity Analysis Process
5. Data Collection Process Flow

[redacted]

[redacted]

DCN: 11302

Intelligence JCSG Meeting
September 10, 2003

Attendees

Members:

- Ms. Carol Haave, Deputy Assistant Secretary of Defense (Security and Information Operations), Chair
- Mr. Fred Frederickson, Division Chief, Strategy, Policy and Intelligence Community, Directorate for Naval Intelligence
- Mr. Kenneth Dumm, Associate Director for Intelligence, Directorate of Intelligence, Surveillance and Reconnaissance, Deputy Chief of Staff for Air and Space Operations, Headquarters USAF

Alternates:

- Ms. Jean Bennett, Army
- Mr. Dean Yount, Air Force
- Ms. Karin Dolan, USMC
- Ms. Janet Keys, NSA
- Mr. David Svetz, NRO
- Ms. Regina Genton, NIMA

Others:

- [redacted]
- Ms. Karyn Vice, NSA
- [redacted]
- [redacted]
- [redacted]
- [redacted]
- [redacted]
- [redacted]

[redacted]

[redacted]

DCN: 11302

Base Realignment and Closure 2005

Intelligence Joint Cross-Service Group

10 September 2003

1400 – 1415	Administrative Remarks	[redacted]
1415 – 1430	New Framework Paper/ Transformation Options	Carol Haave
1430 – 1500	Step 1 – Capacity Analysis/ Data Collection Tools	[redacted]
1500 – 1530	Plan of Approach	Carol Haave

[redacted]

DRAFT

DCN: 11302

MEMORANDUM FOR UNDER SECRETARY OF DEFENSE
(ACUISITION, TECHNOLOGY & LOGISTICS)

SUBJECT: Establishment of the Intelligence Joint Cross-Service Group

Submitted in accordance with your July 30, 2003 memorandum is the initial report of the Intelligence Joint Cross-Service Group (IJCSG). Pending Infrastructure Steering Group review and approval, this report describes the JCSG's guiding principles, functions within the scope of the JCSG, functions to be analyzed, functions to be excluded from analysis, JCSG organization structure, and the JCSG's analytical approach and notional metrics.

The principal IJCSG members, copied below, have met twice to date. The ideas offered during the group's discussions and guidance from both your representatives and those from the general counsel's office have helped our group initiate the BRAC 2005 process for meaningful reconfiguration of the current Defense intelligence community infrastructure.

Carol Haave
Chairwoman, JCSG
Intelligence

Attachment

cc: IJCSG members

[redacted]

Initial Report of the Intelligence Joint Cross-Service Group

Purpose: To provide the proposed analytical framework whereby the Intelligence Joint Cross-Service Group will complete its review of the Defense intelligence community for BRAC 2005 and improve significantly Defense intelligence capabilities.

Background: The Intelligence Joint Cross-Service Group (IJCSG) has been established to address common intelligence business functions and processes throughout the Department of Defense for the purpose of identifying potential cost savings associated with facility realignments and closures. Defense intelligence, not a subject included in any of the Department's previous BRAC efforts, is itself undergoing significant transformation. The Defense intelligence community, employing present guiding DoD principles of jointness, interoperability, synergy, full exploitation of advanced technologies, adoption of demonstrated best practices, and elimination of unnecessary duplication and redundancy, will:

- Develop new methods and sources to ensure the DoD possesses full knowledge of every adversary's intentions and capabilities.
- Use a network centric system to levy and fulfill intelligence requirements in seconds rather than days or weeks in support of U.S. military forces anywhere in the world.
- Develop 24/7 universal situational awareness for every present or potential threat.
- Develop more joint departmental, rather than Military Department specific, intelligence capabilities that support fully U.S. warfighting plans for the 21st century.
- Improve significantly tactical (minutes to days) and strategic (hours to a week) indications and warning capabilities.
- Reconfigure the community's structure and revamp its business processes to institutionalize horizontal integration and support fully effects-based military operations.
- Apply and utilize fully technological advances to ensure state-of-the-art tools are employed as quickly as possible to provide and protect intelligence.
- Develop the capability to provide pre-emptive attack, immediate response, and rapid response forces useful, fast breaking, accurate intelligence for win decisive campaigns and post-hostilities operations.

- Develop the capability to provide a seamless exchange of sensitive information and classified intelligence to coalition partners and to other Federal, State, and local governments for purposes of homeland defense.
- Develop more capabilities to transition immediately from battlespace surveillance to tactical engagement using new standalone sensor to shooter platforms and other advanced weapon systems like the Joint Strike Fighter.
- Develop new no-notice surge capabilities that require little preparation time to initiate and do not require the degradation of other ongoing intelligence operations.
- Fully employ information management advances that will provide the intelligence consumer, whether they are the President or a tactical commander on the other side of the world what they need before they ask for it (Smart Push) or what they need when they need it (Smart Pull).
- Through vastly improved human-derived intelligence provide more accurate assessments on the history, cultural strengths and weaknesses, societal motivations and behavior patterns, religious beliefs, political views, and other factors that influence and help define present and projected adversaries' intentions and capabilities and post-hostility battle space environments.

Assumptions: The following assumptions are pertinent to the joint review and analysis of intelligence and related functions:

- Reengineering of business processes and the use of new technologies will provide as much or more efficiency and effectiveness for the Defense intelligence community as the reduction of its real estate footprint. Any new business processes that become known as a result of the BRAC review, but have no real estate implications, will be forwarded under separate cover.
- Security is just as important a factor as cost reduction through realignment and consolidation. For example, the IJCSG believes location of functions within the National Capital Region should be rationalized from a security as well as cost reduction perspective.
- Operational parameters may be an overriding factor in the geographical location of some intelligence assets.

- Leased spaces present a greater security risk than military installations.
- Continuity of government requires some redundancy and duplication of effort.
- The other JCSGs will share their data, if requested, with the IJCSG.

Recommended Functions/Subordinate Functions for Analysis: The IJCSG recommends a thorough assessment of Defense intelligence across the full spectrum of functions and business processes. The objective is to map present capabilities using current organizational compositions and business processes to desired future capabilities using the Department's transformational concepts and preferred organizational construct. The desired end state of significantly improved intelligence capabilities will impact present facility usage. The IJCSG will document these real estate implications for BRAC 2005 through a review of the following functions:

- Sources and Methods
  Present sources, to include geospatial, signals, and human-derived intelligence
  New technologies and means

Today, the Department's intelligence collection function is largely platform focused and Service oriented. Exploitation and processing is specific "INT" focused. In the future, DoD will need to become more joint information focused with more bit level fusion of cross "INT" data. As DoD begins to employ new systems and divests itself of its least useful collection platforms, the real estate footprint will undoubtedly change. The IJCSG will try to assess how those changes will affect physical facility usage.

- Correlation/Collaboration/Analysis/Access
  National/Theater/Tactical intelligence

Very little of the information the Defense intelligence community collects is ever processed or analyzed. One of the community's objectives is to use information technology to data mine and better correlate the information it collects using concepts like horizontal fusion. Eliminating redundant and unnecessary taskings, databases, and crisis support centers is another objective. The pending Global Information Grid Bandwidth Expansion will revolutionize the community's entire analytical and dissemination process.

Again, the ramifications of these and other developments on the real estate footprint will be evaluated.

- Management Activities
  Investment/Process Reform

One of DoD's biggest challenges is to make the Defense intelligence community more flexible and adaptable to change. Refinement and reform must be incorporated using shorter lead times, corrective measures must be implemented faster, technology advancements must be adopted with greater rapidity. Defense intelligence must learn to adapt as quickly as the nation's adversaries do to our ISR capabilities.

Excluded Functions: At this time, the IJCSG does not believe any function should be excluded from its extensive review of the Defense intelligence community.

Notional Metrics: The following notional metrics are identified for use in analyzing the functions and business processes of military intelligence. The list may be modified. These metrics are in addition to those that measure socio-economic and environmental impacts.

- ✓ General metric: square footage available versus actually used.
- ✓ Age and state of asset/facility.
- ✓ Asset/facility utilization rate.
- ✓ Cost of asset/facility to operate and be maintained.
- ✓ Adaptability of asset/facility to modifications.
- ✓ Criticality of asset's/facility's function/output to present and future intelligence operations.
- ✓ Necessity of asset/facility for COOP/COG redundancy/dispersal.
- ✓ Asset/facility square footage vacated if asset/function is disestablished or relocated.
- ✓ Asset/function's security increases or decreases if relocated from a leased space to a military installation.
- ✓ Necessity for asset/facility to remain in the NCR.
- ✓ Necessity of asset/facility to remain in a specific geographic area
- ✓ Non-military utility of facility/property.
- ✓ Reduction to military construction requirements.

Organization: Based on the intelligence functions outlined above and the need to address present and future business processes in the DoD transformational context, the IJCSG proposes to use the organizational structure illustrated below. Each of the three sub-groups will be lead by a principal member of the JCSG. Each subgroup will establish one or more teams to fulfill their assignments. The IJCSG will have a small central staff to plan, organize, compile and certify data, and ensure information and document control. Due to the nature of the subject, all necessary precautions will be taken to ensure not only the BRAC data is safeguarded, but also all classified information remains secure.

Each sub-group will develop a work plan and begin concept development within and across functions. Each sub-group will develop evaluation criteria and metrics most useful to their assigned responsibilities. Some of these will be common and shared across the JCSG; others will be unique to the sub-group. Data calls will capture present business processes and their associated real estate footprints. From this basis, the sub-groups will overlay transformational objectives and develop viable options for functional and base realignments and closures. Military value will remain a preeminent consideration. Tools developed under the auspices of the IEC/ISG will be used if at all possible to minimize costs.

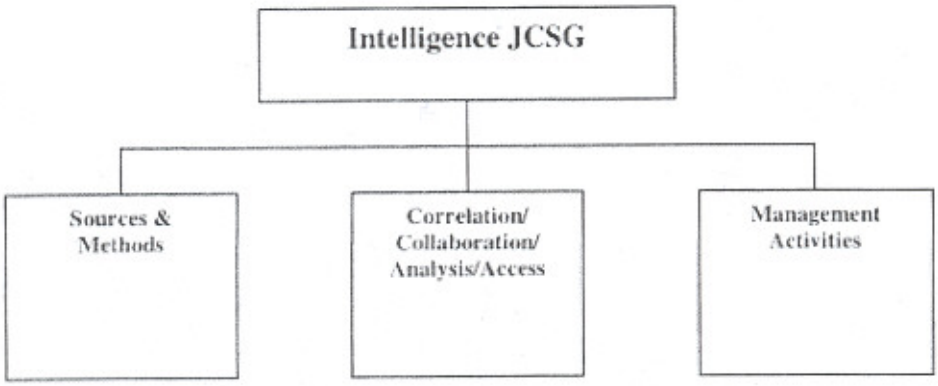

[redacted]

DCN: 11302

Intelligence Joint Cross-Service Group
Standard Operating Procedures
As of 25 August 2003

- Only Group Primary or Alternate members may attend deliberative discussions. Representatives for either the Primary or Alternate will not be permitted to attend Group meetings.
- Primary and Alternate members must possess a [redacted] security clearance. The need for additional clearances will be handled on a case by case basis.
- Every Group member, Primary and Alternate, as well as anyone else who may have access to or knowledge of the Group's activities, MUST sign and date a Non-Disclosure Agreement. Copies of all agreements will be retained by the Chair, the OSD BRAC 2005 office, and the DoD IG.
- Although the Chair solicits the advice and counsel of the Group members, the Chair does not require any member's concurrence before forwarding recommendations to the ISG and Secretary of Defense.
- The Group will establish and maintain a calendar of scheduled meetings and action suspenses for purposes of advance planning and effective execution.
- All Group meetings will be held in an IC certified SCIF.
- Minutes of Group meetings will be prepared by [redacted] edited by [redacted] reviewed by Mr. Potocheney and [redacted] and approved by the Chair, Ms. Haave. Approved minutes will be disseminated to Group members electronically. The Chair will retain a copy of all minutes. Unless the classification of the minutes prohibits it, the OSD BRAC 2005 office and the DoD IG also will retain a copy.
- All electronic and hardcopy documentation will contain the following header and footer: [redacted]
- All hardcopy documentation will be protected by the standard OSD BRAC 2005 cover sheet.
- Subordinate Working Groups may be formed at the direction of the Chair. Working Group members must adhere to the Group's standard operating procedures. All Working Group meetings will be held in an IC certified SCIF.

[redacted]

- All information used by the Group for deliberative purposes must be BRAC certified. Certification requires that the originator of the information verifies that the information was produced in response to the Group's specific request and is, to the best of their knowledge, accurate.
- All information produced in response to a Group or Working Group request will be labeled "JCSG for Intelligence Working Paper."
- All substantive and deliberative information produced by the Group or any of its subordinate Working Groups must be controlled. The Chair, JCSG and the subordinate Working Group Chairs will be responsible for establishing and maintaining an effective document control program. Copies of substantive and deliberative documents will be numbered and provided to Group or Working Group Members only. Additional copies of such documents is prohibited without the prior permission of the Group or Working Group Chair. Electronic forwarding of such documents also is prohibited without the appropriate Chair's prior permission. If electronic or hardcopy copies are produced, the appropriate Chair must be told who the additional recipients are and how many copies were provided.
  A master controlled documents roster will be maintained that indicates the total number of approved copies and the number of copies per approved custodian.
- All substantive and deliberative classified information produced by the JCSG will be handled and stored in accordance with DoD regulations for classified material. For purposes of BRAC 2005, all substantive and deliberative [redacted] information will be handled and stored like [redacted] information and labeled UNCLASSIFIED CLOSE HOLD. All JCSG hardcopy information, to include Working Group information, will be secured in locked safe drawers and kept separate from non-BRAC information. All JCSG substantive and deliberative electronic information, to include Working Group information, will be secured in separate electronic folders marked "JCSG for Intelligence" and classified, at a minimum, UNCLASSIFIED CLOSE HOLD.
- All substantive and deliberative information will be centrally stored at either the Group or Working Group level. Access to such information will require appropriate security clearances, a clearly demonstrated "need to know," and the Group or Working Group Chair's prior permission. All individuals with access to such information MUST

sign a Non-Disclosure Agreement. The Group or Working Group Chair will maintain an access list for their respective centrally stored documents. The access list will indicate the name of the individual who was provided access to the stored material, the individual's organization, the specific documents that were reviewed, and the date the information was reviewed.

- The DoD IG has the permission to attend any Group or Working Group meeting and review any documentation produced by or in support of the entire BRAC 2005 process.
- Additions/deletions/revisions to this list of procedures requires the Chair's permission.

Nondisclosure Agreement

My duties include work assignments and responsibilities in which I may acquire personal knowledge of or access to information concerning the development of recommendations relating to potential closure or realignment of military installations in the Base Realignment and Closure (BRAC) 2005 process. I understand and agree that it is my duty and obligation to comply with the provisions of this agreement respecting such information, and that my violation of this agreement may result in disciplinary action.

1. I understand that the development of any BRAC 2005 information, written or oral, pursuant to the Defense Base Closure and Realignment Act of 1990, as amended, is an official, sensitive, and deliberative process. "Written" information includes all electronic and hard copy forms of communication. I further understand that the development of such information is not limited to final documents or products, but also includes all draft and feeder documents, briefings and notes, as well as any other related oral or written communication.

2. The public and all levels of federal, state, and local government have a right to expect and trust that the BRAC 2005 process will be conducted objectively and impartially. Any unauthorized disclosure of BRAC information undermines that expectation and trust and is therefore prohibited. Unauthorized disclosures may also constitute a violation of law and DoD or Military Department directives, regulations, instructions, policies, or guidance. I promise not to disclose any BRAC information, except as specifically authorized.

3. I further understand that any document or any other written communication, whether draft or final, is the official property and record of the Department of Defense and shall be retained, disseminated, released, and destroyed in accordance with requirements of law and applicable DoD or Military Department directives, regulations, instructions, policies or guidance.

4. I understand that the provision of this agreement bind me personally until the Secretary of Defense transmits BRAC recommendations to the Commission and Congress even if I am reassigned to other duties or stations, retire, or otherwise cease employment or any contract, agency, or other relationship or association with the Department of Defense.

_____ _____

Signature Date

_____ _____

Name Printed Organization

DCN: 11302

Capacity Analysis Process

Installations & Environment

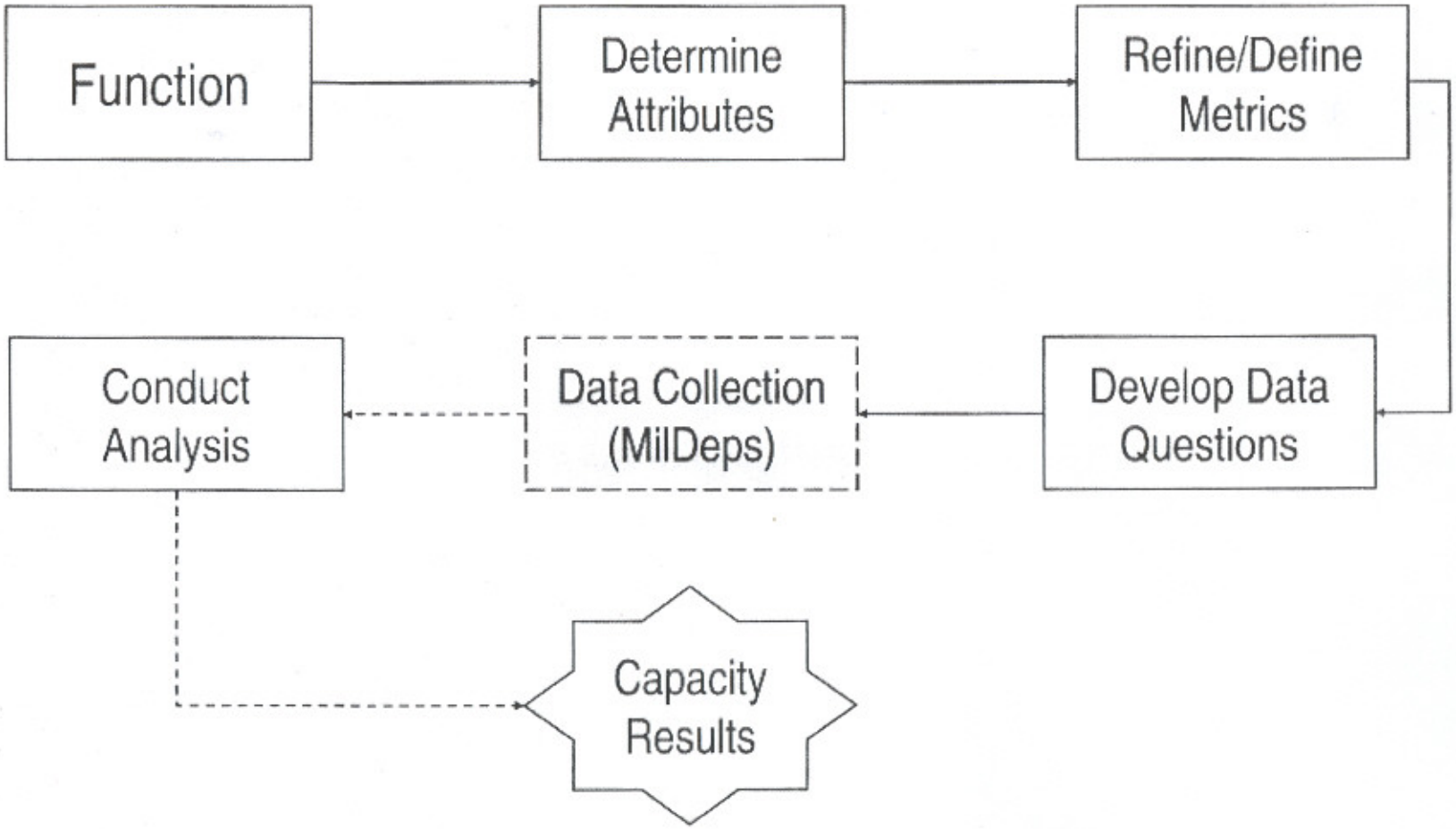

[redacted]

Data Collection Process Flow

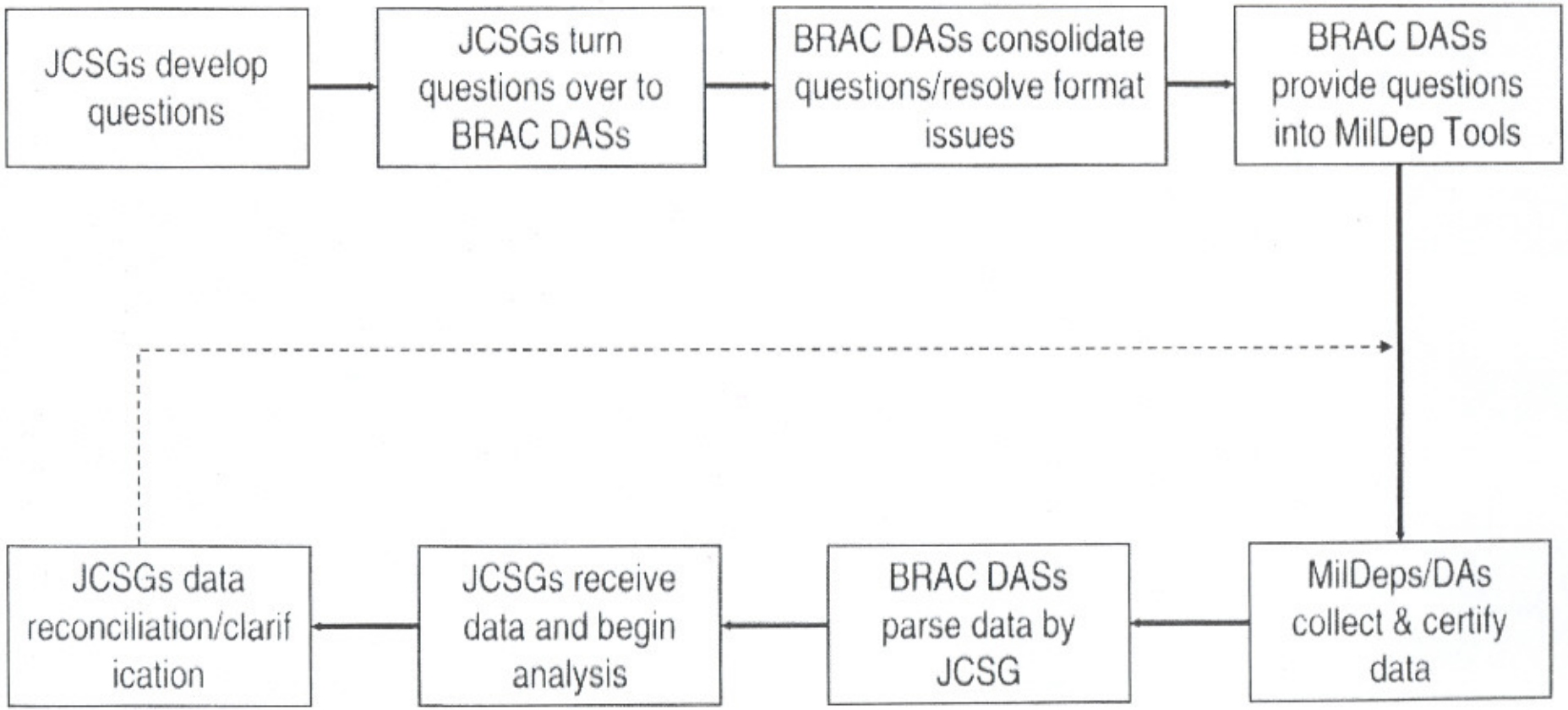

[redacted]