UIC: 00204

CLOSE HOLD

JOINT CROSS-SERVICE

CATEGORY:

UNDERGRADUATE PILOT TRAINING

Naval Air Station Pensacola
Data Call 20

MILITARY VALUE ANALYSIS:
DATA CALL WORK SHEETS

4 April, 1994

The information contained herein is sensitive. Deputy SECDEF guidance restricts the release of data or analysis pertaining to evaluation of military bases for closure or realignment until the SECDEF forwards recommendations to the Base Closure Commission. All individuals handling this information should take steps to protect the material herein from disclosure.

**********If any responses are classified, attach separate classified annex.**********

CLOSE HOLD

Table of Contents

Mission Requirements

A. Training Other Than Undergraduate Pilot and NFO/Navigator Training 4
B. Operational Squadron Support 7
C. Managed Training Areas 10
D. General Military Support 11
E. Other Support 14
F. Weather 15

Facilities

A. Air Space and Flight Training Areas 17
B. Airfields 35
C. Ground Training Facilities 41
D. Aircraft Maintenance Facilities 44
E. Special Military Facilities 45
F. Facility Support Arrangements for Other Services 48
G. Proximity to Operational Mission Areas 52
H. Proximity to Training Areas 53
I. Proximity to Other Support Facilities 54
J. Unique features 56

Future Requirements

A. Air Quality 57
B. Encroachment 58
C. Ability for Expansion 65

Manpower Implications

A. Quality of Life 69

PILOT/NFO/NAVIGATOR TRAINING INSTALLATION LISTING:

Title	Location
COLUMBUS	COLUMBUS MS
CORPUS CHRISTI	CORPUS CHRISTI TX
FT RUCKER	FT RUCKER AL
KINGSVILLE	KINGSVILLE TX
LAUGHLIN	DEL RIO TX
MERIDIAN	MERIDIAN MS
PENSACOLA	PENSACOLA FL
RANDOLPH *	UNIVERSAL CITY TX
REESE	LUBBOCK TX
SHEPPARD	WITCHITA FALLS TX
VANCE	ENID OK
WHITING FIELD	MILTON FL

* Includes Enhanced Flight Screening sites at Hondo TX and Air Force Academy CO

Revision 1

Mission Requirements

A. Training Other Than Undergraduate Pilot and NFO/Navigator Training

1. List all ground combat units that train at this installation.

Ground Unit/MTOE	Training Function
	NONE

2. List all other units not previously mentioned (active, reserve, guard, etc.) that train at this installation. JRC

SEE BRANCH MED. CLINIC ATTACHMENT ~~A~~ B FOR ADDITIONAL DATA. CNATRA N6 5/18/94

Operational Unit/TDA	Training Function
CBU-402	Training functions are to keep construction and military skills current and to be prepared for Fleet Hospital support in a war time scenario.
NAMI	Student Flight Surgeons, AVT Tech, APT Tech.
USA 160th SOAR, FT Campbell, KY; 160th SOAR, Hunter AAF, Savanah, GA; 36th Medical Detachment, FT Polk, LA; 33rd Aviation Group, FT Rucker, AL	Provide initial small ship deck landing qualification and small deck landing currency requirements.
USMC Marine Aircraft Group 42, NAS Atlanta, GA	Provide initial small ship deck landing qualification and small deck landing currency requirements.
USAF 55th SOS, Hurlburt Field, FL	Provide initial small ship deck landing qualification and small deck landing currency requirements.
USCG ATC, Mobile, AL; Coast Guard Air Station, Clearwater, FL	Provide initial small ship deck landing qualification and small deck landing currency requirements.
CIVILIAN AEGIS Contract Pilots	Provide initial small ship deck landing qualification and small deck landing currency requirements.
Reserve Mobilization Training Unit MTU AL-5	Reserve training conducted one weekend per month utilizing MATSG Hdqtrs building.
NCTS Various Reserve Units	Active duty training for Data Processing rate and Radioman rate.
JOAP-TSC Army Material Command-LOGSA	Certification of Army Oil Lab Operators.

HEARD CNET N-4433 27 May

Mission Requirements

A. Training Other Than Undergraduate Pilot and NFO/Navigator Training

1. List all ground combat units that train at this installation.

Ground Unit/MTOE	Training Function
	N O N E

2. List all other units not previously mentioned (active, reserve, guard, etc.) that train at this installation.

Operational Unit/TDA	Training Function
CBU-402	Training functions are to keep construction and military skills current and to be prepared for Fleet Hospital support in a war time scenario.
NAMI	Student Flight Surgeons, AVT Tech, APT Tech.
USA 160th SOAR, FT Campbell, KY; 160th SOAR, Hunter AAF, Savanah, GA; 36th Medical Detachment, FT Polk, LA; 33rd Aviation Group, FT Rucker, AL	Provide initial small ship deck landing qualification and small deck landing currency requirements.
USMC Marine Aircraft Group 42, NAS Atlanta, GA	Provide initial small ship deck landing qualification and small deck landing currency requirements.
USAF 55th SOS, Hurlburt Field, FL	Provide initial small ship deck landing qualification and small deck landing currency requirements.
USCG ATC, Mobile, AL; Coast Guard Air Station, Clearwater, FL	Provide initial small ship deck landing qualification and small deck landing currency requirements.
CIVILIAN AEGIS Contract Pilots	Provide initial small ship deck landing qualification and small deck landing currency requirements.
Reserve Mobilization Training Unit MTU AL-5	Reserve training conducted one weekend per month utilizing MATSG Hdqtrs building.
NCTS Various Reserve Units	Active duty training for Data Processing rate and Radioman rate.
JOAP-TSC Army Material Command-LOGSA	Certification of Army Oil Lab Operators.

DDPF-T Various Reserve	Logistics Support.
DPHSCOL Navy Reserve	Basic and Advanced Photography
DPHSCOL Air National Guard	Basic and Advanced Photography
DPHSCOL Civilians	Basic Photography

Operational Unit/TDA	Training Function
HURLBERT FLT 15TH SOS	BIMONTHLY SPEC FORCES TRAINING
HURLBERT FLT 20TH SOS	BIMONTHLY SPEC FORCES TRAINING
HURLBERT FLT 1ST SSOS	BIMONTHLY SPEC FORCES TRAINING
ARMY RANGER TRAINING BAT.	WEEKLY SURVIVAL TRAINING
263RD CCSQ	COMMUNICATIONS
16TH OG HURLBERT	NVG OPS
1ST OG	NVG OPS
VAW 120	FCLP
VF-124	ACM
VG-126	ACM
344TH AIR CALV.	FORT BRAGG SPEC OPS
VQ4	AIR TRAINING
160TH SOAR	SPEC OPS

Revision 1

Mission Requirements

A. Training Other Than Undergraduate Pilot and NFO/Navigator Training (cont)

3. List all requirements the installation or its tenants have to support training of other service components (e.g., ground force training, battle group exercise, etc.)

SEE BRANCH MED. CLINIC ATTACHMENT B FOR ADDITIONAL DATA. CNATRA N6 5/18/94

Forces	Location/ Distance	Type of Support	Frequency
Navy Seal Team	Pascagoula 115 nmi.	WX/low level wind	Quarterly
COOP Mine Unit 22	Pascagoula 115 nmi.	WX/tides/astro	Quarterly
Air Nat'l Guard	Local	WX/daily forecast	Semi
USCG	Various	LDO/CWO Water Survival Training	20/month Weekly
MERCMARIN	Bldg 633	DCO (2 classes/yr)	60/yr
NASA	Various	Water Survival Training	Weekly
USAF	Various	Water Survival Training	Weekly
USA	Various	Water Survival Training	Weekly
IMS	Various Bldg 633	Water Survival Training AMO	Monthly 8/yr
USAF	Pensacola	Joint Water Survival	Weekly
USMC	Pensacola	Joint Air Combat Training	Annually
US Govt	Gulf of Mexico	Port Services/PAX Transfer	4/qtr
USN/USAF	NW Florida	Cruise Missile React	As needed
DOD/DOT	Gulf of Mexico	Helicopter Landing Training	4/mo 2/mo

Header CNET N-443 27 MAY

Mission Requirements

A. Training Other Than Undergraduate Pilot and NFO/Navigator Training (cont)

3. List all requirements the installation or its tenants have to support training of other service components (e.g., ground force training, battle group exercise, etc.)

Forces	Location/ Distance	Type of Support	Frequency
Navy Seal Team	Pascagoula 115 nmi.	WX/low level wind	Quarterly
COOP Mine Unit 22	Pascagoula 115 nmi.	WX/tides/astro	Quarterly
Air Nat'l Guard	Local	WX/daily forecast	Semi
USCG	Various	LDO/CWO Water Survival Training	20/month Weekly
MERCMARIN	Bldg 633	DCO (2 classes/yr)	60/yr
NASA	Various	Water Survival Training	Weekly
USAF	Various	Water Survival Training	Weekly
USA	Various	Water Survival Training	Weekly
IMS	Various Bldg 633	Water Survival Training AMO	Monthly 8/yr
USAF	Pensacola	Joint Water Survival	Weekly
USMC	Pensacola	Joint Air Combat Training	Annually
US Govt	Gulf of Mexico.	Port Services/PAX Transfer	4/qtr
USN/USAF	NW Florida	Cruise Missile React	As needed
DOD/DOT	Gulf of Mexico	Helicopter Landing Training	4/mo 2/mo

Mission Requirements (cont.)

B. Operational Squadron Support

1. List the operational (active or reserve) or special squadrons based at your installation. Include any programmed additions or deletions through FY 1997. (HQ Air Force will provide for Air Force)

Squadron Name	Aircraft Type(s)	Mission
NAS Pensacola	C-12	Transport Ops/Logistics
NAS Pensacola SAR Det	H-3	SAR 200 nmi. surrounding NAS Pensacola
~~VT-4~~	~~T-2~~	~~E2/C2 Advanced Pilot Training~~
~~VT-10~~	~~T-34/T-39~~	~~Primary/Intermediate NFO Training~~
~~VT-86~~	~~T-39/T-2~~	~~Advanced NFO Training~~
NAVFLIGHTDEMRON	F/A-18/C-130	Flight demonstration/Public awareness - Combat deployable

2 (NATRAN.

2. List all other DoD, non-DoD, and other aircraft which are or are programmed (through FY 1997) to be parked or stationed at your installation. (HQ Air Force will provide for Air Force)

Service/Agency/ Custodian	Aircraft Type(s)	Mission
U.S. Army	H-60/OH-58	Support Water Survival.
USAF	H-3	Support Water Survival.
NADEP	H-53/H-60	Maintenance support for rework.
Naval Aviation Museum	Various	Restoration and display.

Mission Requirements (cont.)

B. Operational Squadron Support (cont.)

3. Provide the average daily number of flight operations conducted by non-training military aircraft assigned to this station and the total number of days during which these operations were conducted. If data is not normally recorded, include estimates (and identify as such). A flight operation is defined as a takeoff, landing, or approach without a landing.

FY	Main Airfield		Auxiliary Field **OLF Choctaw**		Auxiliary Field **OLF Bronson**		Auxiliary Field **Chevalier Field**	
	No. Ops	No.[1] Days	No. Ops	No. Days	No. Ops	No. Days	No. Ops	No. Days
1991	97	237	1	237	90	237	6	237
1992	93	237	1	237	82	237	9	237
1993	84	237	1	237	57	200	11	237
1994[2]	45*	62	1	237	Closed	Closed		

*** HC-16 decommissioned Nov 93 and NADEP (Chevalier Field) being closed by BRAC 93, will become site for Aviation Schools when transferred from Millington, TN.**

FY	Main Airfield **(Blue Angels)**		Auxiliary Field		Auxiliary Field		Auxiliary Field	
	No. Ops	No. Days	No. Ops	No. Days	No. Ops	No. Days	No. Ops	No. Days
1991	10	133						
1992	10	128						
1993	9	129						
1994	6	8						

Include only days when the installation operates at normal training levels (Do not include weekends and holidays if the training rate is at minimal levels).

Include FY 1994 data through 31 March 1994.

Mission Requirements (cont.)

B. Operational Squadron Support (cont.)

4. List deployable aviation support units (e.g., Command & Control, Expeditionary Base Support, and Air Defense) stationed at this installation. For each type unit, give the number assigned, its mission and primary equipment items (e.g., radars, trucks, etc.).

Type of Unit	Number of Units	Mission	Equipment Items
N O N E			

Mission Requirements (cont.)

C. Managed Training Areas

1. List the air-to-ground training ranges, outlying airfields, auxiliary airfields, special use airspace and areas for special use that are actively managed (scheduled or controlled) by the installation.

Managed Training Assets	Management Role
OLF Choctaw	Provide support personnel/equipment and manned control tower for CTW-5 and CTW-6 aircraft and other services as required.
OLF Bronson (Closed) Helo use only	Provide crash crew for helo use. Inside Sherman Field's airport traffic area (Class C airspace).
Chevalier Field (being closed by BRAC 93) NADEP helos only	Provide crash crew for helo use.
W-155 A & B	~~Scedule~~ SCHEDULE, provide radar, advisory and AIC manned control to participating aircraft.
Eagle Zulu 1 - 5	Schedule, provide radar and advisory control to participating aircraft.
Eagle Alpha & Bravo	Schedule.
South MOA	Schedule.

See 10a
SH
CNET
N44331
5/11/94
2
CNATRANS

2. List other candidate installations (DoD and non-DoD) that could be considered for performing these management duties.

Asset	Installation	Reason for Consideration
All	None	Previous study completed by Martin Marietta "Teis Project" recognized NAS Pensacola as facility to take control of entire Gulf Coast and airspace over entire Gulf of Mexico. No other naval complexes or other service installations exists in the vicinity of Pensacola that can satisfy this requirement.
OLF CHOCTAW	NAS WHITING FLD	PROXIMITY
W-155 A+B	NAS WHITING FLD	PROXIMITY
ALL ATCAAs	NAS WHITING FLD	PROXIMITY
ALL MOAs	NAS WHITING FLD	PROXIMITY
R-2908	NAS WHITING FLD	PROXIMITY
OLF BRONSON	NAS WHITING FLD	PROXIMITY
CHEVALIER FIELD	NAS WHITING FLD	PROXIMITY

2
CNATRANS

2
CNATRANS

Mission Requirements (cont.)

C. Managed Training Areas

1. List the air-to-ground training ranges, outlying airfields, auxiliary airfields, special use airspace and areas for special use that are actively managed (scheduled or controlled) by the installation.

Managed Training Assets	Management Role
OLF Choctaw	Provide support personnel/equipment and manned control tower for CTW-5 and CTW-6 aircraft and other services as required.
OLF Bronson (Closed) Helo use only	Provide crash crew for helo use. Inside Sherman Field's airport traffic area (Class C airspace).
Chevalier Field (being closed by BRAC 93) NADEP helos only	Provide crash crew for helo use.
W-155 A & B	Scedule, provide radar, advisory and AIC manned control to participating aircraft.
Eagle Zulu 1 - 5	Schedule, provide radar and advisory control to participating aircraft.
Eagle Golf 1 & 2	*Provide radar and advisory control to participating units.*
Eagle Alpha & Bravo	Schedule.
South MOA	Schedule.

SH
CNET
N44331
5/11/94

2. ~~List other~~ candidate installations (DoD and non-DoD) that could be considered for performing these management ~~duties~~.

Asset	Installation	Reason for Consideration
All	None	Previous study completed by Martin Marietta "Teis Project" recognized NAS Pensacola as facility to take control of entire Gulf Coast and airspace over entire Gulf of Mexico. No other naval complexes or other service installations exists in the vicinity of Pensacola that can satisfy this requirement.

SH
CNET
N44331
5/11/94

Mission Requirements (cont.)

D. General Military Support

1. Does this installation currently support any joint services (i.e., counter-narcotics) air operations? If so, explain.

YES

~~No. The air station does not support any joint services air operations at this time.~~ ~~The air station has the capabilities and facilities to assist/support joint service missions.~~ CNATRAN

NAS PENSACOLA OCCASIONALLY USES ITS ASR-8 RATCF DAIR AND ASSOCIATED RADAR SCOPES IN SUPPORT OF COUNTER-NARCOTICS AIR OPERATIONS.

a. If applicable, give the type and number of aircraft based at your installation that conduct these operations and the total number of sorties flown during FY 1993 in support of these operations.

Aircraft Type	Number of Aircraft	# Sorties Flown in FY 1993
N/A		

b. If applicable, list special equipment and facility (e.g., radar surveillance systems) at your installation that directly support these operations. *** EQUIPMENT THAT COULD BE AVAILABLE IF NEEDED.**

Equipment/Facility	Function
Helicopter Landing Trainer (IX 514)	Provide initial small deck landing qualification and small deck landing currency requirements.
ASR-8	Radar coverage for off-shore SUA and surveillance approaches at home field.
FPN-63	PAR approaches at home field.

2. Does this installation have a role in national air defense or any other war or peace time defense plans? If so, explain. YES. 1. AIR STATION IS COVERED UNDER "OPEN SKIES" TREATY 2. UNDER SCATANA, A PLAN EXISTS TO DEACTIVATE NAVIGATIONAL AIDS. CNATRAN3

~~**No. NAS Pensacola is assigned duties by Chief of Naval Air Training and as such all missions are specifically designated as training missions. All other support functions are in direct support of training only.**~~

Mission Requirements (cont.)

D. General Military Support (cont.)

3. Does this installation directly support a military or civilian area control and surveillance mission (e.g., FACSFAC, FAA support)? If so, provide details.

The Radar Air Traffic Control Center/Fleet Area Control and Surveillance Facility (RATCF/FACSFAC) is a class VB joint control facility, as defined by NAVAIR 00-80t-114, and houses a radar air traffic control facility providing airport traffic control and low-approach landing services with full pattern control; and the Navy Tactical Data System/Advanced Combat Direction System (NTDS/ACDS) equipment and personnel to provide a variety of services to air, surface and subsurface units. These services are provided to both military and civilian users and include radar surveillance and various forms of air traffic control in warning and other special use airspace areas. Other services include surface operating area management, ground controlled intercept, operating are scheduling and range control.

4. Describe the role this installation plays in any logistics support and mobilization plan.

NAS Pensacola's peacetime mission is to provide quality support to naval air training, tenants, and other customers through continuous improvement in quality of life, workforce, environment, and public image. Under a warfare scenario, there are no changes to NAS Pensacola's mission but intensity of support will increase. Flight training lead time necessary to produce a Pilot or Naval Flight Officer (NFO) is not compatible with the duriation of the warfare scenario. Per DOD guidance, there will be no additional aircraft made available for the projected 180-day scenario. Thus, the planned number of student pilots and NFO's entering the active inventory represent only a slight surge or increase in the peacetime projection. This may result in an increased workweek. Major command will monitor/coordinate and develop additional amplifying guidance, as required, for functional command and it's activities.

CBU-402: Mobilization plan to deploy and suport a Fleet Hospital in a war time scenario.

5. List any other military support missions currently conducted at/from this installation (e.g., port of embarkation for personnel, other active duty/reserve personnel or logistics transfer missions).

CBU-402: Provide logistic support to Reserve Seabee Units when they deploy to NAS Pensacola.
NAMI: Support OCS for physical examinations.
JOAP-TSC: Produces for the Federal Supply System calibration standards for all DOD Oil Laboratory Oil Analysis sectronometers (300 instruments). Manages monthly correlation testing of all DOD laboratories (250) and 19 allied country laboratories. Navy Oil Analysis Laboratory, under the supervision of the JOAP-TSC, provides regional oil analysis support to local aviation activities including CNATRA, NADEP, and Coast Guard units.
AIR OPS: Two C-12B aircraft provide air transport operations as scheduled by the Naval Air Logistics Office (NALO).
Helicopter Landing Trainer currently providing an "at-sea landing" training for USA and USAF special operations forces and USCG. This one of a kind vessel is homeported at NAS Pensacola.

Mission Requirements (cont.)

D. General Military Support (cont.)

6. Are any new military missions planned for this installation?

MATSG: Absorption of MATSG-90, Millington, TN; projected FY 97.

NLMOD: Will be upgraded to a METOC Facility Aug 94. The OIC billet will be upgraded to an O-5 Commanding Officer position, and an additional 8 military and 3 additional civilian (GS-5 through GS-10) will be added. The METOC Facility will have administrative responsibility over 11 METOC Detachments with an expected budget of 1.5 million (+).

DPSDO: New expansion of services in line with new tenants and increased work.

DENTAL: BRAC 93 decision to relocate components from NAS Memphis to NAS Pensacola requires an increase and/or addition to the Branch Dental Clinic. An additional 12 Dentists with supporting facilities are required to meet the workload of the projected population.

NCTS: Selected as the DON source to perform evaluation and verification of all telecommunications requirements at each site selected to receive new Navy mission areas as a result of BRAC consolidation decisions. Oversees the regionalization of Activities providing telephone service (APTS) functions for the entire southern region of CONUS, scheduled to assume operational responsibility for APTS functions at Pensacola, Pascagoula, and Memphis during FY95. Designated to coordinate and provide technical assistance in upgrading all telecommunications facilities on Navy bases identified in Maine, Mississippi, and Puerto Rico in FY95. Has become the DON telecommunications site for: NAVNET Customer Service Center; NAVNET Network Control Center; Navy Tactical Network Control Center; Navy Tactical Network Logistics Support Center. Serving as the Consolidated Navy Video Teleconferencing Enterprise (CNVTE) Navy Frame Relay supporting Navy Systems Command and DOD subscribers. Designated as one of three DON Message Distribution Terminal (MTD) Hub sites on the Gulf Coast and serves as relay point for Defense Message System (DMS) messages. Has oversight responsibility for MDT Hub site in Corpus Christi, TX. Serves as regional coordinator for Gateguard technology. Although currently geographically serving Pensacola, Whiting Field, and Mississippi, NTCC Pensacola will gain message processing responsibility for the Coast Guard, Navy and Government Agency commands located in Miami, Elizabeth City, DC, and Panama City, FL.

NASC: Yes. The Air Force 17th Combat Training Squadron will be relocating to NAS Pensacola to combine their water survival training program with NAVAVSCOLSCOM's program. USCG will add 200/year students to LDO/CWO Indoc CWO2.

JOAP-TSC: Increase staffing by 50 percent (to 27 personnel) by expanding responsibilities in data analysis, maintenance support, and program management.

FISC: Recommended to NAVSUP for temporary FISC Det Jacksonville at NAS Pensacola for FOSCO (Foreign Officer) Training for FY96 (not approved yet).

DPHSCOL: Sceduled to move to FT. Meade, MD in 1997.

BRAC 93 fall out includes the migration of Naval Aviation Technical Training Center; Naval Aviation Maintenance Group; Marine Aviation Training Support Group-90; USAF Detachment; and USA Detachment from Memphis, TN to NAS Pensacola in FY 96.

SEE ADDITIONAL ATTACHMENTS 13a-c

SH
CNET
N44331
5/11/94

Mission Requirements (cont.)

D. General Military Support (cont.)

6. Are any new military missions planned for this installation?

MATSG: Absorption of MATSG-90, Millington, TN; projected FY 97.

NLMOD: Will be upgraded to a METOC Facility Aug 94. The OIC billet will be upgraded to an O-5 Commanding Officer position, and an additional 8 military and 3 additional civilian (GS-5 through GS-10) will be added. The METOC Facility will have administrative responsibility over 11 METOC Detachments with an expected budget of 1.5 million (+).

DPSDO: New expansion of services in line with new tenants and increased work.

DENTAL: BRAC 93 decision to relocate components from NAS Memphis to NAS Pensacola requires an increase and/or addition to the Branch Dental Clinic. An additional 12 Dentists with supporting facilities are required to meet the workload of the projected population.

NCTS: Selected as the DON source to perform evaluation and verification of all telecommunications requirements at each site selected to receive new Navy mission areas as a result of BRAC consolidation decisions. Oversees the regionalization of Activities providing telephone service (APTS) functions for the entire southern region of CONUS, scheduled to assume operational responsibility for APTS functions at Pensacola, Pascagoula, and Memphis during FY95. Designated to coordinate and provide technical assistance in upgrading all telecommunications facilities on Navy bases identified in Maine, Mississippi, and Puerto Rico in FY95. Has become the DON telecommunications site for: NAVNET Customer Service Center; NAVNET Network Control Center; Navy Tactical Network Control Center; Navy Tactical Network Logistics Support Center. Serving as the Consolidated Navy Video Teleconferencing Enterprise (CNVTE) Navy Frame Relay supporting Navy Systems Command and DOD subscribers. Designated as one of three DON Message Distribution Terminal (MTD) Hub sites on the Gulf Coast and serves as relay point for Defense Message System (DMS) messages. Has oversight responsibility for MDT Hub site in Corpus Christi, TX. Serves as regional coordinator for Gateguard technology. Although currently geographically serving Pensacola, Whiting Field, and Mississippi, NTCC Pensacola will gain message processing responsibility for the Coast Guard, Navy and Government Agency commands located in Miami, Elizabeth City, DC, and Panama City, FL.

NASC: Yes. The Air Force 17th Combat Training Squadron will be relocating to NAS Pensacola to combine their water survival training program with NAVAVSCOLSCOM's program. USCG will add 200/year students to LDO/CWO Indoc CWO2.

JOAP-TSC: Increase staffing by 50 percent (to 27 personnel) by expanding responsibilities in data analysis, maintenance support, and program management.

FISC: Recommended to NAVSUP for temporary FISC Det Jacksonville at NAS Pensacola for FOSCO (Foreign Officer) Training for FY96 (not approved yet).

DPHSCOL: Sceduled to move to FT. Meade, MD in 1997.

SEE ADDITIONAL ATTACHMENTS (13a-c)

DEPARTMENT OF THE NAVY
PERSONNEL SUPPORT ACTIVITY
431 SAUFLEY ST
PENSACOLA FL 32508-5203

11000
Ser 30/- 263
11 APR 1994

From: Commanding Officer, Personnel Support Activity, Pensacola
To: Commanding Officer, Naval Air Station, Pensacola

Subj: BRAC 95 DATA CALLS 2 AND 3

Ref: (a) NAS Pensacola FL 071235Z APR 94

1. In response to reference (a), the following information is provided:

a. As a result of PASS consolidation under two major claimants, Personnel Support Activity (PSA), Pensacola is scheduled for disestablishment 1 October 1994 and Personnel Support Activity Detachment (PSD) Pensacola will be realigned under the command of PSA Jacksonville.

b. As a result of BRAC 93 decision, customer loading will increase at PERSUPPDET Pensacola with the relocation of Memphis training commands to Pensacola. Latest information lists approximately 2045 officer/enlisted/civilian from relocating commands and an average student on board count of 4200 beginning in FY96/97.

c. The consolidation of the OCS/AOCS curriculum at NAS Pensacola in April 1994 will increase the customer base of the PSD by approximately 300 students annually.

2. PERSUPPACT Pensacola POC: LCDR M. Jackson, COMM: (904) 452-2221.

R. L. JAMES

Memo

TO: LCDR Dave Edwards

FROM: Thomas R. Carpenter, Director DIPC

DATE: April 11, 1994

SUBJECT: BRAC 95 DATA CALLS 2 AND 3

Defense Information Processing Center, Pensacola, was recently established as a result of DoD data center consolidations in accordance with DMRD 918 and the BRAC 93 requirements. We were formerly the Data Processing Installation Department of Naval Computer and Telecommunications Station, Pensacola. Our new headquarters activity is Defense Information Services Organization in Denver, CO.

As a separate activity on base, and due to our mainframe workload being scheduled to migrate to megacenters, our mission will change and the functions we will be performing will reflect more of a storefront operation. DISO intends to maintain this type presence for local Commanders support and megacenter interface beyond 1996, which is the BRAC disestablishment date for this activity.

The following functions will be included in our new mission:

1. Remote Job Entry and Output Distribution
2. Local Area Network (LAN) Installation, Management, and Operations
3. Unique Systems Operations (i.e. TANDEM minicomputers)
4. Personal Computer Repair and Maintenance
5. Multimedia Support
   - AUTOCAD Facilities Management Support
   - Video Graphics Presentation Support (for officers conferences, change of commands, retirement ceremonies, etc.)

If you have any questions on this input, please call my point of contact, Mrs. Marie Giles, 2-3501, extension 5354.

DEPARTMENT OF THE NAVY
NAVY PUBLIC WORKS CENTER
310 JOHN TOWER ROAD
PENSACOLA, FLORIDA 32508-5303

IN REPLY REFER TO:
11000
Code 50

11 Apr 94

From: Commanding Officer, Public Works Center, Pensacola
To: Commanding Officer, Naval Air Station, Pensacola

Subj: BRAC 95 DATA CALLS 2 AND 3

Ref: (a) NAS Pensacola FL 071235Z Apr 94

1. The following is provided in response to reference (a):

NPWC Pensacola will provide facilities engineering support services for the Naval Air Technical Training Center (NATTC) that was relocated to NAS Pensacola as a result of BRAC 93 actions. Approximately 2.1 million square feet of new construction, and renovations of .38 million square feet of existing facilities will occur from FY94 through FY97 to provide training, berthing, messing, and recreational facilities for the new NATTC. Operational support provided by NPWC Pensacola for this new mission will include planning and engineering support; maintenance, repair and construction of real property; transportation support; utilities support, hazardous waste management and disposal; family housing and housing referral services; facilities service contract support; and construction contract support.

2. My point of contact for this issue is LCDR Bob Raines at 452-4332.

J. S. SPORE III

13c

Revision 1

Mission Requirements (cont.)

E. Other Support

1. Does the installation have a role in a disaster assistance plan, search and rescue, or local evacuation plan? If so, describe.

DPO: NAS Pensacola's airfield and support departments enable manpower and equipment to be evacuated in the event of natural or man-made disasters. Local evaucation of military personnel and dependents occupying on-base housing in the event of any disaster is also delineated in NAS Pensacola OPLAN 1-94.

AIR OPS: NAS Pensacola provides SAR for the Pensacola training complex including Training Wing 6 and NAS Whiting Field Training Wing 5. SAR coverage is 24 hours a day, 7 days a week with a 15 minute notice. As directed by the Commanding Officer, SAR may also be provided to the civilian community.

SEE BRANCH MED. CLINIC ATTACHMENT B FOR ADDITIONAL DATA. CNATRA N6 per 5/18/94

2. Does the installation provide any direct meteorological support to local civilian, governmental or military agencies? If so, describe.

Yes. Support is provided in the form of Flight Forecasts, Terminal Aerodrome Weather, Weather Warnings, Climatology, Fleet Liaison Services, and other environmental requirements on an "as needed" basis. WEATHER SUPPORT IS PROVIDED TO TRAWING SIX OPERATIONS.

CNATRAN3

3. Are any new civilian or other non-DoD missions planned for this installation? If so, describe.

~~**A State of Florida sponsored "boot camp" for juvenile offenders will open in the late spring or early summer 1994 timeframe. It will provide strict military discipline, education, and counseling for 30 youths at a time, initially, and expand over the next 2 years to accomodate 60 juvenile offenders. Permanent living quarters, classroom, and administrative spaces are in final stages of construction. It should be noted that this program is being funded by the State of Florida.**~~

BOOT CAMP AND ASSOCIATED CONSTRUCTION HAS BEN CANCELLED

APN
N-353
CNET
31 MAY 94

Mission Requirements (cont.)

E. Other Support

1. Does the installation have a role in a disaster assistance plan, search and rescue, or local evacuation plan? If so, describe.

DPO: NAS Pensacola's airfield and support departments enable manpower and equipment to be evacuated in the event of natural or man-made disasters. Local evaucation of military personnel and dependents occupying on-base housing in the event of any disaster is also delineated in NAS Pensacola OPLAN 1-94.

AIR OPS: NAS Pensacola provides SAR for the Pensacola training complex including Training Wing 6 and NAS Whiting Field Training Wing 5. SAR coverage is 24 hours a day, 7 days a week with a 15 minute notice. As directed by the Commanding Officer, SAR may also be provided to the civilian community.

2. Does the installation provide any direct meteorological support to local civilian, governmental or military agencies? If so, describe.

Yes. Support is provided in the form of Flight Forecasts, Terminal Aerodrome Weather, Weather Warnings, Climatology, Fleet Liaison Services, and other environmental requirements on an "as needed" basis. WEATHER SUPPORT IS PROVIDED TO TRAINING SIX OPERATIONS.

CNATRAN3

3. Are any new civilian or other non-DoD missions planned for this installation? If so, describe.

A State of Florida sponsored "boot camp" for juvenile offenders will open in the late spring or early summer 1994 timeframe. It will provide strict military discipline, education, and counseling for 30 youths at a time, initially, and expand over the next 2 years to accomodate 60 juvenile offenders. Permanent living quarters, classroom, and administrative spaces are in final stages of construction. It should be noted that this program is being funded by the State of Florida.

Mission Requirements (cont.)

F. Weather

1. What percentage of the time (on average, by month), does the local weather affect training operations and restrict airfield sortie rates. Use the following chart and add any further descriptions on how weather generally impacts airfield and training operations (recurring wind or fog conditions, etc.).

Airfield: SHERMAN FIELD

Month	% of Hours[3] VMC	% of Hours IMC	% of Hours Below 500 ft Ceilings and 1.0 Mile Visibility	% of All Sorties Rescheduled/Canceled Due to Weather
Jan.	~~20~~ 80	~~80~~ 20	11	16
Feb.	~~19~~ 81	~~81~~ 19	10	5
Mar.	~~20~~ 80	~~80~~ 20	12	19
Apr.	~~16~~ 84	~~84~~ 16	7	4
May	~~8~~ 92	~~92~~ 8	2	5
June	~~4~~ 96	~~96~~ 4	1	6
July	~~3~~ 97	~~97~~ 3	*	7
Aug.	~~4~~ 96	~~96~~ 4	*	5
Sept.	~~5~~ 95	~~95~~ 5	1	14
Oct.	~~6~~ 94	~~94~~ 6	2	2
Nov.	~~11~~ 89	~~89~~ 11	5	5
Dec.	~~17~~ 83	~~83~~ 17	9	21

*** Less than 1 percent.**

NORMAL OPERATING HOURS
0600 - 2400 M-F
0800 - 1000 S-S
TRAINING NORMALLY M-F.

SH (HERTEL)
CNET N44331
5/11/94

CNATRAINJ

Percentage of total normal operating hours that specified weather conditions were observed (include list of normal operating hours used for this calculation).

CNATRAN3

Blue Angels

Month	% of Hours[4] VMC	% of Hours IMC	% of Hours Below 500 ft Ceilings and 1.0 Mile Visibility	% of All Sorties Rescheduled/Canceled Due to Weather
Jan.	0	0	0	0
Feb.	0	0	0	0
Mar.	0	0	0	0
Apr.	95	5	3	14
May	95	5	3	14
June	95	5	3	0
July	95	5	3	0
Aug.	95	5	3	0
Sept.	95	5	3	0
Oct.	95	5	3	0
Nov.	95	5	3	0
Dec.	85	15	7	23

2. Give the official planning factor for percent of sorties lost due to weather (based on historic data).

~~**Blue Angels: Weather not planned for in scheduling.**~~ CNATRA N3

CTW-6: VT-4 Advanced E2/C2 T-2 = 13%; VT-10 Primary and Intermediate NFO T-34 = 22% / T-39 = 7%; VT-86 Advanced NFO RIO T-39 = 4% / TN T-39 = 10% / OJN T-39 = 4% / T-2 = 14%

3. Do the normal weather conditions at the most frequently used training areas pose a chronic problem for scheduling training sorties? If so, are alternate training areas used? Does the use of alternate training facilities involve relocating aircraft and support personnel to other installations during certain times of the year?

Blue Angels: No. Yes. Yes.

CTW-6: ~~**Yes, weather during the months of December, January and February may preclude low level flights along military training routes from being completed.**~~

ND

CNATRAN3

Percentage of total normal operating hours that specified weather conditions were observed (include list of normal operating hours used for this calculation).

Facilities

A. Air Space and Flight Training Areas

1. Is mission/training impacted by training area airspace encroachment or other conflict? For example, noise abatement/traffic procedures that limit operations. Explain.

No

2. Do the MOAs/bombing ranges/other training areas have any scheduling restrictions/limitations?

No

a. If scheduling problems are encountered, list all reasons.

3. Do you expect more restrictions/limitations to be imposed on the MOAs/bombing ranges/other training areas used by your unit?

No

a. If yes, state all reasons.

4. Are there any significant changes/restrictions/limitations being worked that will affect the scheduling of low level routes used by your unit?

No

a. If yes, list all changes.

5. Excluding airport traffic area, what airspace does the installation schedule/manage? Include any military operating areas, restricted areas, warning areas, low altitude tactical navigation areas, air refueling tracks/anchors, military training routes, and alert areas. List and identify each unit of airspace. Provide MOA and restricted area utilization reports as necessary.

See Pages 17 (a) and 17 (b)

6. If installation does not schedule/manage any airspace, then identify airspace used for local training.

Not applicable

Facilities (cont.)

A. Airspace and Flight Training Areas (cont.)

5. (cont.)

Area: **Warning Area 155a**
Dimensions: **2,309 square nm, SURF-FL 600**
Controlling Agency: **FAA, ARTCC Jacksonville, FL**
Using Agency: **Commander, TRAWING-SIX NAS Pensacola, FL**
Airspace Scheduled 1993: **1,795**
Airspace Used 1993: **1,345**

Area: **Warning Area 155b**
Dimensions: **2,746 square nm, SURF-FL 600**
Controlling Agency: **FAA, ARTCC Jacksonville, FL**
Using Agency: **Commander, TRAWING-SIX NAS Pensacola, FL**
Airspace Scheduled 1993: **1,468**
Airspace Used 1993: **1,109**

Area: **Warning Area 453**
Dimensions: **1,205 square nm, SURF-FL 3000**
Controlling Agency: **FAA, Houston ARTCC**
Using Agency: **Commander, Air National Guard Training Site**
Airspace Scheduled 1993: **3,500**
Airspace Used 1993: **3,500**

Area: **Alert Area 292**
Dimensions: **TW-5 to answer square nm, within federal airways, SURF-FL 17,500**
Controlling Agency: **N/A**
Using Agency: **Commander, TRAWING-FIVE**
Airspace Scheduled 1993: **TW-5 to answer**
Airspace Used 1993: **TW-5 to answer**

Area: **Restricted Area 2908**
Dimensions: **75 square nm, SURF-FL 12,000**
Controlling Agency: **FAA, Pensacola RATCF**
Using Agency: **Commander, TRAWING-SIX NAS Pensacola, FL**
Airspace Scheduled 1993: **8 hours**
Airspace Used 1993: **8 hours**

Area: **Military Operating Area Pensacola South**
Dimensions: **1,196 square nm, 10,000' - FL 180**
Controlling Agency: **FAA, Pensacola RATCF**
Using Agency: **Commander, TRAWING-SIX NAS Pensacola, FL**
Airspace Scheduled 1993: **1,632**
Airspace Used 1993: **1,296**

Area: **Military Operating Area Pensacola North**
Dimensions: **1,209 square nm, 10,000' - FL 180**
Controlling Agency: **FAA, Pensacola RATCF**
Using Agency: **Commander, TRAWING-FIVE, NAS Whiting Field, Milton, FL**
Airspace Scheduled 1993: **TW-5 to answer**
Airspace Used 1993: **TW-5 to answer**

Facilities (cont.)

A. Airspace and Flight Training Areas (cont.)

5. (cont.)

NAS Pensacola also schedules the following low level (10,000' and below) military training routes:

Routes	Routes
VR1020	VR1021
VR1022	VR1023
VR1024	IR-021
IR-022	IR-037
IR-038	IR-040
IR-077	IR-078
IR-079	IR-080
IR-081	IR-082
IR-083	IR-608
IR-723	

Hours of Operations for all IR/VR Routes is 0700-2300 local.

NOTE[1]: Information provided from data collected in 1993 only. Data for 1990 through 1992 was not collected and is unavailable.

Facilities (cont.)

A. Air Space and Flight Training Areas (cont.)

7. For each piece of airspace, that your installation controls or manages, answer the following questions:

   a. Has an environmental analysis (EA, EIS, etc.) been conducted on each airspace? **No**
      - What is the status of each environmental analysis and supplement?
      - Were there any problems associated with the analysis?
      - Does the current "Description of Proposed Actions/Alternatives" (DOPAA) define your operations, and if it does, was it used for the latest environmental analysis and supersonic waiver if required? Explain any lack of reports.
   b. Are there known noise sensitive areas (NSAs) associated with each piece of airspace? **No**
      - List those documented in Flight Information Publication (FLIP) and those you have concerns about.
      - Do any of these NSAs affect or threaten the quality of training or mission?
   c. Are there any known civilian/commercial encroachments with each piece of airspace? **No**
      - List those for ground or airspace encroachment. (i.e., Public-use airports, parachute operations, gliders, etc.)
   d. Are there any planned expansions to your special use airspace? **No**
      (Include new airspace proposals)
      - Explain proposal and give status (to include community reactions)
      - What was the primary rationale supporting expansion?
   e. What type of restrictions exist with each airspace? (i.e., hours of operation, subsonic, altitude restrictions, exercise only, ATC delays, etc.) **Hours of operations and altitude restriction are delineated in question 5. Other operational limitations are specified by class of special use airspace.**
   f. What is the published availability of each airspace?
      - How many hours (average per year for 1990 thru 1993) was the airspace scheduled?
      - How many hours were actually used (average per year for 1990 thru 1993, total of all users)? **Refer to Question 5 for above three questions.**
      - State reasons for difference between scheduled and actually used. **Weather conditions, aircraft availability, and flight student loading.**
   g. Is it possible to increase utilization of the airspace? **Yes**
   h. Can it be expanded in volume and/or hours of use? **Yes**
   i. Describe the volume or area of the airspace. **Airspace dimensions and altitudes are discussed in Question 5.**
   j. What percentage of the airspace is usable? **100%***

* THEORETICALLY, THE ENTIRE AIRSPACE IS USABLE. IN PRACTICE, SMALL QUANTITIES ARE NOT USED DUE TO PROXIMITY TO OTHER AREAS, LACK OF GROUND REFERENCES, LACK OF SUITABLE NAVAIDS, ETC.

C NATTRANS

Facilities (cont.)

A. Air Space and Flight Training Areas (cont.)

8. Potential For Growth in Training Airspace (Area)

a. Is expansion possible? **Physical expansion of SUA - No, but utilization of existing SUA could double based upon historical data.**

- If yes, give an estimate of the percentage of increase and rationale for your estimate

b. Will current access remain the same (status quo)? **Yes**

c. Are reductions expected? **No**
- If yes, give an estimate of the percentage of decrease and rationale for your estimate

d. Do current special use airspace and training areas meet all training requirements? (Yes or No)

Blue Angels: No **AIR OPS: Yes** **CTW-6: Yes**

- Can some of your training requirements only be met by deployed, off-station training? (Yes or No)

AIR OPS/CTW-6: Yes - Carrier Qualifications - no ship operating in the Gulf of Mexico
Blue Angels: Yes

- If not, what degradation is experienced? Explain/identify

9. Commercial Aviation Impact

a. Is the installation joint-use (CIVILIAN/MILITARY)? **No**

b. Identify all of the airfields (to include civilian/commerical/general aviation/uncontrolled) within a 50 mile radius of the installation.

AIR OPS: VFR Sectional Charts on order. Will provide with needed information as soon as possible. Have provided with Data Call 3.

c. Do civilian/commerical operators or other airspace users pose any scheduling, operational, or environmental constraints or limits on operations? **No**
(In answering Yes or No, consider ATC, hours of operations, flight tracks/profiles, conflicting traffic with other airports or airspace users, noise sensitive areas, etc.
- Describe the impact.

Facilities (cont.)

A. Air Space and Flight Training Areas (cont.)

10. List all areas for special use within 100 nmi. of your installation. For each piece of airspace, provide the following data:

Airspace Designator: **SEE PAGES 21 - 29**

a. Type of airspace (i.e., warning area, MOA, alert area, restricted area, or MTR)
b. Dimensions (nmi. x nmi. x ft)
c. Distance from main airfield
d. Time en route from main airfield
e. Controlling agency
f. Scheduling agency
g. Are canned/stereo airways needed to access air space?
   - If so, how many?
   - If so, what types (i.e., IFR, VFR, or altitude reservation)?
h. Is the airspace under radar coverage?
   - If so who provides the coverage?
i. Is the airspace under communications coverage?
   - If so who provides the coverage?
j. Number of low level airways (below 18,000 ft) that bisect airspace
k. Number of high altitude airways (above 18,000 ft) that bisect airspace
l. Total number of sorties/movements flown in FY 1990 thru 1993
   - By your service
   - By other services (including reserves and national guard)
m. Total number of available hours in FY 1990 thru 1993
n. Total number of scheduled hours in FY 1990 thru 1993
   - By your service
   - By other services (including reserves and national guard)
o. Total number of hours used
   - By your service
   - By other services (including reserves and national guard)
p. Types of training permitted

1. **W-155A**
   a. Warning Area.
   b. 2,309 Square miles. SURF-FL600
   c. 30 miles.
   d. 10 minutes.
   e. FAA, ARTCC Jacksonville, FL.
   f. FACSFAC Pensacola, FL.
   g. No.
   h. Yes. FACSFAC Pensacola
   i. Yes. Pensacola (FACSFAC)
   j. None.
   k. None.

SH
CNET
N44331
5/12/94

	FY93	FY92	FY91	FY90
l. Total -	7,903	9698	7794	N/A
-by Navy	4,741	6788	4942	N/A
-by other services	3,162	2910	2852	N/A
m. 365 days/24 hours - 8760 hours per year				
n. Total -	1,795	N/A	N/A	N/A
-by Navy	986	N/A	N/A	N/A
-other services	809	N/A	N/A	N/A
o. Total -	1,345	N/A	N/A	N/A
-by Navy	739	N/A	N/A	N/A
-by other services	606	N/A	N/A	N/A

   p. Air combat maneuvers, Basic flight maneuvers, Radar intercepts, Familiarization flights.

1. **W-155B**
   a. Warning Area.
   b. 2,746 Square miles. SURF - FL600
   c. 50 miles.
   d. 13 minutes.
   e. FAA, ARTCC Jacksonville, FL.
   f. FACSFAC Pensacola, FL.
   g. No.
   h. Yes. FACSFAC Pensacola
   i. Yes.
   j. None.
   k. None.

SH
CNET
N44331
5/12/94

	FY93	FY92	FY91	FY90
l. Total -	6,466.	N/A	N/A	N/A
-by Navy	3,880.	N/A	N/A	N/A
-by other services	2,586.	N/A	N/A	N/A
m. 365 days/24 hours - 8760 hrs/yr				
n. Total -	1,468	N/A	N/A	N/A
-by Navy	808	N/A	N/A	N/A
-other services	660	N/A	N/A	N/A

   o. 1,109 hours
      -by Navy 609 hours.
      -by other services 500 hours.
   p. Air combat maneuvers, Basic flight maneuvers, Radar intercepts, Familiarization flights.

*** Prior to FY93 hours scheduled/used were not recorded for Warning Area 155A/B nor was sorties kept separate for "Alpha and Bravo" areas.**

A. Air Space and Flight Training Areas (cont.)

1. **W-155A**
   a. Warning Area.
   b. 2,309 Square miles. SURF-FLGOO ✓ CNATRAN3
   c. 30 miles.
   d. 10 minutes.
   e. FAA, ARTCC Jacksonville, FL.
   f. FACSFAC Pensacola, FL.
   g. No.
   h. Yes.
   i. Yes.
   j. None.
   k. None.
   l. 7,903.
      -by Navy 4,741.
      -by other services 3,162.
   m. - 7.4%
   n. ~~6,570 hours~~. 4380 ✓ CNATRAN3
   o. 1,795 hours.
      -by Navy 986 hours.
      -other services 809 hours.
   p. 1,345 hours
      -by Navy 739 hours.
      -by other services 606 hours.
   q. Air combat maneuvers, Basic flight maneuvers, Radar intercepts, Familiarization flights.

1. **W-155B**
   a. Warning Area.
   b. 2,746 Square miles. SURF-FLGOO ✓ CNATRAN3
   c. 50 miles.
   d. 13 minutes.
   e. FAA, ARTCC Jacksonville, FL.
   f. FACSFAC Pensacola, FL.
   g. No.
   h. Yes.
   i. Yes.
   j. None.
   k. None.
   l. 6,466.
      -by Navy 3,880.
      -by other services 2,586.
   m. - 2%
   n. ~~6,570 hours~~. 4380 ✓ CNATRAN3
   o. 1,468 hours.
      -by Navy 808 hours.
      -other services 660 hours.
   p. 1,109 hours
      -by Navy 609 hours.
      -by other services 500 hours.
   q. Air combat maneuvers, Basic flight maneuvers, Radar intercepts, Familiarization flights.

1. **Pensacola South Military Operating Area**
   a. Military Operating Area.
   b. 1,196 Square miles. 10000 – FL180
   c. 0 miles.
   d. 5 minutes.
   e. Pensacola ATC Tower.
   f. COMTRAWING SIX.
   g. No.
   h. Yes. Pensacola ATC Tower
   i. Yes.
   j. None.
   k. None.

SH
CNET
N44331
5/12/94

	FY93	FY92	FY91	FY90
l. Total -	1,632	1,893	2,867	2,811
-by Navy	1,632	N/A	N/A	N/A
-by other services	0	N/A	N/A	N/A

m. SR-0600Z++ MON-SAT - 313 DAYS/18 HOURS = 5634 HOURS PER YEAR

n. Total -	1,632	4,445	6,570	5,616
-by Navy	1,632	N/A	N/A	N/A
-by other services	0	N/A	N/A	N/A
o. Total -	1,296	4,445	6,498	4,680
-by Navy	1,296	N/A	N/A	N/A
-by other services	0	N/A	N/A	N/A

p. Progressive spins, Basic instruments, VFR training, Air combat training, formation training, NATOPS training.

1. **Pensacola North Military Operating Area**
   a. Military Operating Area.
   b. 1,209 Square miles. 10000 – FL180
   c. 30 miles.
   d. 10 minutes.
   e. FAA, ARTCC Jacksonville, FL.
   f. COMTRAWING ~~SIX.~~ FIVE
   g. No.
   h. Yes. FAA ARTCC JAX
   i. Yes.
   j. None.
   k. None.

SH
CNET
N44331
5/12/94

	FY93	FY92	FY91	FY90
l. Total -	4,555	N/A	4,377	6,211
-by Navy	N/A	N/A	N/A	N/A
-by other services	N/A	N/A	N/A	N/A

m. DAYS MON-SAT - 313 DAYS/12HOURS = 3756 HOURS PER YEAR

n. Total -	5,478	N/A	4,267	4,253
-by Navy	N/A	N/A	N/A	N/A
-by other services	N/A	N/A	N/A	N/A
o. Total -	N/A	N/A	N/A	N/A
-by Navy	N/A	N/A	N/A	N/A
-by other services	N/A	N/A	N/A	N/A

p. Progressive spins, Basic instruments, VFR training, formation training, NATOPS training.

Facilities

A. Air Space and Flight Training Areas (cont.)

1. **Pensacola South Military Operating Area**
   a. Military Operating Area.
   b. 1,196 Square miles. 10000 – FL 180 CNATRA N3
   c. 0 miles.
   d. 5 minutes.
   e. Pensacola ATC Tower.
   f. COMTRAWING SIX.
   g. No.
   h. Yes.
   i. Yes.
   j. None.
   k. None.
   l. 1,632.
      -by Navy 1,632.
      -by other services 0.
   m. - < 1%
   n. 3,756 hours.
   o. 1,632 hours.
      -by Navy 1,632 hours.
      -by other services 0 hours.
   p. 1,296 hours.
      -by Navy 1,296 hours.
      -by other services 0 hours.
   q. Progressive spins, Basic instruments, VFR training, Air combat training, formation training, NATOPS training.

1. **Pensacola North Military Operating Area**
   a. Military Operating Area.
   b. 1,209 Square miles. 10000 – FL 180 CNATRA N3
   c. 30 miles.
   d. 10 minutes.
   e. FAA, ARTCC Jacksonville, FL. CNATRA N3
   f. COMTRAWING ~~SIX.~~ FIVE
   g. No.
   h. Yes.
   i. Yes.
   j. None.
   k. None.
   l. Wing FIVE provided answer (NAS Whiting Field)
   m. - 2%
   n. 3,756 hours.
   o. Wing FIVE to answer.
      -by Navy
      -by other services
   p. Primary Pilot Training and Helicopter Training.
      -by Navy
      -by other services
   q. Progressive spins, Basic instruments, VFR training, formation training, NATOPS training.

1. **W-453**
   a. Warning Area.
   b. 1,205 Square miles. SURF - FL500
   c. 40 miles.
   d. 13 minutes.
   e. FAA, ARTCC Houston, TX.
   f. ANG Trng, Gulfport, MS.
   g. No.
   h. Yes.
   i. Yes.
   j. None.
   k. None.

FAA ARTCC Houston TX

SH CNET N44331 5/12/94

	FY93	FY92	FY91	FY90
l. Total -	3,500	N/A	N/A	N/A
-by Navy	375	N/A	N/A	N/A
-by other services	3,125	N/A	N/A	N/A
m. 365 days/24 hours - 8760 hours per year				
n. Total -	3,500	N/A	N/A	N/A
-by Navy	375	N/A	N/A	N/A
-by Other services	3,125	N/A	N/A	N/A
o. Total -	3,500	N/A	N/A	N/A
-by Navy	375	N/A	N/A	N/A
-by other services	3,125	N/A	N/A	N/A

p. Awaiting data from ANG Gulfport.

1. **Eagle Gulf One**
   a. Air Traffic Controlled Assigned Airspace.
   b. 864 Square miles. 2000 - FL500
   c. 60 miles.
   d. 15 minutes.
   e. FAA, ARTCC Houston, TX.
   f. ANG Trng, Gulfport, MS.
   g. No.
   h. Yes.
   i. Yes.
   j. None.
   k. None.

FAA ARTCC Houston TX

SH CNET N44331 5/12/94

	FY93	FY92	FY91	FY90
l. Total -	3,500	N/A	N/A	N/A
-by Navy	375	N/A	N/A	N/A
-by other services	3,125	N/A	N/A	N/A
m. 365 days/24 hours - 8760 hours per year				
n. Total -	3,500	N/A	N/A	N/A
-by Navy	375	N/A	N/A	N/A
-by Other services	3,125	N/A	N/A	N/A
o. Total -	3,500	N/A	N/A	N/A
-by Navy	375	N/A	N/A	N/A
-by other services	3,125	N/A	N/A	N/A

p. Awaiting data from ANG Gulfport.

Facilities

A. Air Space and Flight Training Areas (cont.)

1. **W-453**
   a. Warning Area.
   b. 1,205 Square miles.
   c. 40 miles.
   d. 13 minutes.
   e. FAA, ARTCC Houston, TX.
   f. ANG Trng, Gulfport, MS.
   g. No.
   h. Yes.
   i. Yes.
   j. None.
   k. None.
   l. 3,500.
      -by Navy 350.
      -by other services 3,125.
   m. Awaiting data from ANG Gulfport.
   n. 4,380 hours.
   o. 3,500.
      -by Navy 350.
      -by Other services 3,125.
   p. 3,500.
      -by Navy 350.
      -by other services 3,125.
   q. Awaiting data from ANG Gulfport.

SURF - FL 500 CNATRAN3

1. **Eagle Gulf One**
   a. Air Traffic Controlled Assigned Airspace.
   b. 864 Square miles.
   c. 60 miles.
   d. 15 minutes.
   e. FAA, ARTCC Houston, TX.
   f. ANG Trng, Gulfport, MS.
   g. No.
   h. Yes.
   i. Yes.
   j. None.
   k. None.
   l. 3,500.
      -by Navy 350.
      -by other services 3,125.
   m. Awaiting data from ANG Gulfport.
   n. 4,380 hours.
   o. 3,500.
      -by Navy 350.
      -by Other services 3,125.
   p. 3,500.
      -by Navy 350.
      -by other services 3,125.
   q. Awaiting data from ANG Gulfport.

2000 - FL 500 CNATRAN3

1. **Eagle Gulf Two**
   a. Air Traffic Controlled Assigned Airspace.
   b. 2,132 Square miles. SURF-A500
   c. 80 miles.
   d. 20 minutes.
   e. FAA, ARTCC Houston, TX.
   f. ANG Trng, Gulfport, MS.
   g. No.
   h. Yes. FAA ARTCC Houston TX
   i. Yes.
   j. None.
   k. None.

SH
CNET
N44331
5/12/94

	FY93	FY92	FY91	FY90
l. Total -	3,500	N/A	N/A	N/A
-by Navy	350	N/A	N/A	N/A
-by other services	3,125	N/A	N/A	N/A
m. 365 days/24 hours - 8760 hours per year				
n. Total -	3,500	N/A	N/A	N/A
-by Navy	350	N/A	N/A	N/A
-by Other services	3,125	N/A	N/A	N/A
o. Total -	3,500	N/A	N/A	N/A
-by Navy	350	N/A	N/A	N/A
-by other services	3,125	N/A	N/A	N/A

p. Awaiting data from ANG Gulfport.

1. **R-2908**
   a. Restricted Area.
   b. 75 Square miles. 2000-FL 500
   c. 25 miles.
   d. 6 minutes.
   e. Pensacola RATCF.
   f. Commander, Training Air Wing Six.
   g. No.
   h. Yes. Pensacola ATC Tower
   i. Yes.
   j. None.
   k. None.

SH
CNET
N44331
5/12/94

	FY93	FY92	FY91	FY90
l. Total -	11	268	210	184
-by Navy	11	268	210	184
-by other services	0	0	0	0
m. 365 days/24 hours - 8760 hours per year				
n. Total -	8	72	76	120
-by Navy	8	72	76	120
-by other services	0	0	0	0
o. Total -	8	68	38	120
-by Navy	8	68	38	120
-by other services	0	0	0	0

p. Basic flight maneuvers and Aerial acrobatics.

Facilities

A. Air Space and Flight Training Areas (cont.)

1. **Eagle Gulf Two**
   a. Air Traffic Controlled Assigned Airspace.
   b. 2,132 Square miles.
   c. 80 miles.
   d. 20 minutes.
   e. FAA, ARTCC Houston, TX.
   f. ANG Trng, Gulfport, MS.
   g. No.
   h. Yes.
   i. Yes.
   j. None.
   k. None.
   l. 3,500.
      -by Navy 350.
      -by other services 3,125.
   m. Awaiting data from ANG Gulfport.
   n. 4,380 hours.
   o. 3,500.
      -by Navy 350.
      -by Other services 3,125.
   p. 3,500.
      -by Navy 350.
      -by other services 3,125.
   q. Awaiting data from ANG Gulfport.

SURF - FL 500 2 CNATRA N3

1. **R-2908**
   a. Restricted Area.
   b. 75 Square miles.
   c. 25 miles.
   d. 6 minutes.
   e. Pensacola RATCF.
   f. Commander, Training Air Wing Six.
   g. No.
   h. Yes.
   i. Yes.
   j. None.
   k. None.
   l. 11.
      -by Navy 11.
      -by other services 0.
      m. - <1%
   n. 4,380 hours.
   o. 8 hours.
      -by Navy 8 hours.
      -by other services 0.
   p. 8 hours.
      -by Navy 8 hours.
      -by other services 0.
   q. Basic flight maneuvers and Aerial acrobatics.

2000 - FL 500 2 CNATRA N3

1. **IR-021**
   a. Instrument Flight Route.
   b. N/A
   c. 28 miles.
   d. 7 minutes.
   e. N/A.
   f. FACSFAC Pensacola.
   g. No.
   h. No.
   i. Yes. - FAA ARTCC Jacksonville FL
   j. None.
   k. None.

SH
CNET
N44331
5/12/94

	FY93	FY92	FY91	FY90
l. Total -	32	18	10	16
-by Navy	28	N/A	N/A	N/A
-by other services	4	N/A	N/A	N/A
m. 1200-0400Z++ MON-FRI - 261 DAYS/16 HOURS = 4176 HOURS PER YEAR				
n. Total -	16	9	5	8
-by Navy	14	N/A	N/A	N/A
-by other services	2	N/A	N/A	N/A
o. Total -	16	9	5	8
-by Navy	14	N/A	N/A	N/A
-by other services	2	N/A	N/A	N/A

   p. Instrument flight training, point to point navigation, and Radar Navigation Training.

1. **IR-037**
   a. Instrument Flight Route.
   b. N/A
   c. 67 miles.
   d. 17 minutes.
   e. N/A.
   f. FACSFAC Pensacola.
   g. No.
   h. No.
   i. Yes.— FAA ARTCC Houston TX
   j. None.
   k. None.

SH
CNET
N44331
5/12/94

	FY93	FY92	FY91	FY90
l. Total	183	233	227	309
-by Navy	175	N/A	N/A	N/A
-by other services	8	N/A	N/A	N/A
m. 1200-0400Z++ MON-FRI - 261 DAYS/16 HOURS = 4176 HOURS PER YEAR				
n. Total -	92	117	114	155
-by Navy	88	N/A	N/A	N/A
-by other services	4	N/A	N/A	N/A
o. Total -	16	N/A	N/A	N/A
-by Navy	12	N/A	N/A	N/A
-by other services	4	N/A	N/A	N/A

   p. Instrument flight training, point to point navigation, and Radar Navigation Training.

Facilities

A. Air Space and Flight Training Areas (cont.)

1. **IR-021**
   a. Instrument Flight Route.
   b. N/A
   c. 28 miles.
   d. 7 minutes.
   e. N/A.
   f. FACSFAC Pensacola.
   g. No.
   h. No.
   i. Yes.
   j. None.
   k. None.
   l. 32.
      -by Navy 28.
      -by other services 4.
   m. -<1%
   n. 5,840 hours.
   o. 16 hours.
      -by Navy 14 hours.
      -by other services 2 hours.
   p. 16 hours.
      -by Navy 14 hours.
      -by other services 2 hours.
   q. Instrument flight training, point to point navigation, and Radar Navigation Training.

1. **IR-037**
   a. Instrument Flight Route.
   b. N/A
   c. 67 miles.
   d. 17 minutes.
   e. N/A.
   f. FACSFAC Pensacola.
   g. No.
   h. No.
   i. Yes.
   j. None.
   k. None.
   l. 183.
      -by Navy 175.
      -by other services 8.
   m. -<1%
   n. 5,840 hours.
   o. 92 hours.
      -by Navy 88 hours.
      -by other services 4 hours.
   p. 16 hours.
      -by Navy 88 hours.
      -by other services 4 hours.
   q. Instrument flight training, point to point navigation, and Radar Navigation Training.

1. **IR-038**
   a. Instrument Flight Route.
   b. N/A
   c. 53 miles.
   d. 13 minutes.
   e. N/A.
   f. FACSFAC Pensacola.
   g. No.
   h. No.
   i. Yes.– FAA ARTCC Houston TX
   j. None.
   k. None.

SH
CNET
N44331
5/12/94

	FY93	FY92	FY91	FY90
l. Total -	3	0	2	0
-by Navy	3	0	N/A	0
-by other services	0	0	N/A	0
m. SR-SS MON-FRI - 261 DAYS/12 HOURS = 3132 HOURS PER YEAR				
n. Total -	3	0	2	0
-by Navy	3	0	N/A	0
-by other services	0	0	N/A	0
o. Total -	3	0	2	0
-by Navy	3	0	N/A	0
-by other services	0	0	N/A	0

   p. Instrument flight training, point to point navigation, and Radar Navigation Training.

1. **IR-040**
   a. Instrument Flight Route.
   b. N/A
   c. 53 miles.
   d. 13 minutes.
   e. N/A.
   f. FACSFAC Pensacola.
   g. No.
   h. No.
   i. Yes.– FAA ART Houston TX
   j. None.
   k. None.

SH
CNET
N44331
5/12/94

	FY93	FY92	FY91	FY90
l. Total -	167	262	176	285
-by Navy	161	N/A	N/A	N/A
-by other services	6	N/A	N/A	N/A
m. 1200-0400Z++ MON-FRI - 261 DAYS/16 HOURS = 4176 HOURS PER YEAR				
n. Total -	83	131	88	143
-by Navy	80	N/A	N/A	N/A
-by other services	3	N/A	N/A	N/A
o. Total -	83	131	88	143
-by Navy	80	N/A	N/A	N/A
-by other services	3	N/A	N/A	N/A

   p. Instrument flight training, point to point navigation, and Radar Navigation Training.

Facilities

A. Air Space and Flight Training Areas (cont.)

1. **IR-038**
   a. Instrument Flight Route.
   b. N/A
   c. 53 miles.
   d. 13 minutes.
   e. N/A.
   f. FACSFAC Pensacola.
   g. No.
   h. No.
   i. Yes.
   j. None.
   k. None.
   l. 3.
      -by Navy 3.
      -by other services 0.
   m. -<1%
   n. 4,380 hours.
   o. 3 hours.
      -by Navy 3 hours.
      -by other services 0 hours.
   p. 16 hours.
      -by Navy 3 hours.
      -by other services 0 hours.
   q. Instrument flight training, point to point navigation, and Radar Navigation Training.

1. **IR-040**
   a. Instrument Flight Route.
   b. N/A
   c. 53 miles.
   d. 13 minutes.
   e. N/A.
   f. FACSFAC Pensacola.
   g. No.
   h. No.
   i. Yes.
   j. None.
   k. None.
   l. 167.
      -by Navy 161.
      -by other services 6.
   m. -<1%
   n. 5,840 hours.
   o. 83 hours.
      -by Navy 80 hours.
      -by other services 3 hours.
   p. 16 hours.
      -by Navy 80 hours.
      -by other services 3 hours.
   q. Instrument flight training, point to point navigation, and Radar Navigation Training.

1. **VR-1020**
   a. Visual Flight Route.
   b. N/A
   c. 55 miles.
   d. 14 minutes.
   e. N/A.
   f. FACSFAC Pensacola.
   g. No.
   h. No.
   i. Yes. — FAA Mobile FSS SH CWET N44331 5/12/94
   j. None.
   k. None.

	FY93	FY92	FY91	FY90
l. Total -	448	291	393	429
-by Navy	424	N/A	N/A	N/A
-by other services	24	N/A	N/A	N/A

m. 1200-0400Z++ MON-FRI - 261 DAYS/16 HOURS = 4176 HOURS PER YEAR

n. Total -	224	146	197	215
-by Navy	212	N/A	N/A	N/A
-by other services	12	N/A	N/A	N/A
o. Total -	16	146	197	215
-by Navy	212	N/A	N/A	N/A
-by other services	12	N/A	N/A	N/A

p. Visual Navigation training and point to point navigation.

1. **VR-1021**
   a. Visual Flight Route.
   b. N/A
   c. 55 miles.
   d. 14 minutes.
   e. N/A.
   f. FACSFAC Pensacola.
   g. No.
   h. No.
   i. Yes. — FAA Mobile FSS SH CWET N44331 5/12/94
   j. None.
   k. None.

	FY93	FY92	FY91	FY90
l. Total -	802	894	566	744
-by Navy	780	N/A	N/A	N/A
-by other services	22	N/A	N/A	N/A

m. 1200-0400Z++ MON-FRI - 261 DAYS/16 HOURS = 4176 HOURS PER YEAR

n. Total -	401	894	566	744
-by Navy	390	N/A	N/A	N/A
-by other services	11	N/A	N/A	N/A
o. Total -	401	894	566	744
-by Navy	390	N/A	N/A	N/A
-by other services	11	N/A	N/A	N/A

p. Visual Navigation training and point to point navigation.

Facilities

A. Air Space and Flight Training Areas (cont.)

1. **VR-1020**
   a. Visual Flight Route.
   b. N/A
   c. 55 miles.
   d. 14 minutes.
   e. N/A.
   f. FACSFAC Pensacola.
   g. No.
   h. No.
   i. Yes.
   j. None.
   k. None.
   l. 448.
      -by Navy 424.
      -by other services 24.
   m. <1%
   n. 5,840 hours.
   o. 224 hours.
      -by Navy 212 hours.
      -by other services 12 hours.
   p. 16 hours.
      -by Navy 212 hours.
      -by other services 12 hours.
   q. Visual Navigation training and point to point navigation.

1. **VR-1021**
   a. Visual Flight Route.
   b. N/A
   c. 55 miles.
   d. 14 minutes.
   e. N/A.
   f. FACSFAC Pensacola.
   g. No.
   h. No.
   i. Yes.
   j. None.
   k. None.
   l. 802.
      -by Navy 780.
      -by other services 22.
   m. -1.8%
   n. 5,840 hours.
   o. 401 hours.
      -by Navy 390 hours.
      -by other services 11 hours.
   p. 16 hours.
      -by Navy 390 hours.
      -by other services 11 hours.
   q. Visual Navigation training and point to point navigation.

1. **VR-1022**
   a. Visual Flight Route.
   b. N/A
   c. 75 miles.
   d. 19 minutes.
   e. N/A.
   f. FACSFAC Pensacola.
   g. No.
   h. No.
   i. Yes. – FAA Mobile FSS
   j. None.
   k. None.

SH
CNET
N44331
5/12/94

	FY93	FY92	FY91	FY90
l. Total -	371	294	340	464
-by Navy	357	N/A	N/A	N/A
-by other services	14	N/A	N/A	N/A

m. 1200-0400Z++ MON-FRI - 261 DAYS/16 HOURS = 4176 HOURS PER YEAR

n. Total -	186	147	170	232
-by Navy	179	N/A	N/A	N/A
-by other services	7	N/A	N/A	N/A
o. Total -	186	147	170	232
-by Navy	179	N/A	N/A	N/A
-by other services	7	N/A	N/A	N/A

p. Visual Navigation training and point to point navigation.

1. **VR-1023**
   a. Visual Flight Route.
   b. N/A
   c. 53 miles.
   d. 13 minutes.
   e. N/A.
   f. FACSFAC Pensacola.
   g. No.
   h. No.
   i. Yes. – FAA Mobile FSS
   j. None.
   k. None.

SH
CNET
N44331
5/12/94

	FY93	FY92	FY91	FY90
l. Total -	392	329	353	553
-by Navy	380	N/A	N/A	N/A
-by other services	12	N/A	N/A	N/A

m. 1200-0400Z++ MON-FRI - 261 DAYS/16 HOURS = 4176 HOURS PER YEAR

n. Total -	196	165	177	277
-by Navy	190	N/A	N/A	N/A
-by other services	6	N/A	N/A	N/A
o. Total -	196	165	177	277
-by Navy	190	N/A	N/A	N/A
-by other services	6	N/A	N/A	N/A

p. Visual Navigaton training and point to point navigation.

Facilities

A. Air Space and Flight Training Areas (cont.)

1. **VR-1022**
   a. Visual Flight Route.
   b. N/A
   c. 75 miles.
   d. 19 minutes.
   e. N/A.
   f. FACSFAC Pensacola.
   g. No.
   h. No.
   i. Yes.
   j. None.
   k. None.
   l. 371.
      -by Navy 357.
      -by other services 14.
   m. -<1%
   n. 5,840 hours.
   o. 186 hours.
      -by Navy 179 hours.
      -by other services 7 hours.
   p. 16 hours.
      -by Navy 179 hours.
      -by other services 7 hours.
   q. Visual Navigation training and point to point navigation.

1. **VR-1023**
   a. Visual Flight Route.
   b. N/A
   c. 53 miles.
   d. 13 minutes.
   e. N/A.
   f. FACSFAC Pensacola.
   g. No.
   h. No.
   i. Yes.
   j. None.
   k. None.
   l. 392.
      -by Navy 380.
      -by other services 12.
   m. -<1%
   n. 5,840 hours.
   o. 196 hours.
      -by Navy 190 hours.
      -by other services 6 hours.
   p. 16 hours.
      -by Navy 190 hours.
      -by other services 6 hours.
   q. Visual Navigaton training and point to point navigation.

1. **VR-1024**
   a. Visual Flight Route.
   b. N/A
   c. 55 miles.
   d. 13 minutes.
   e. N/A.
   f. FACSFAC Pensacola.
   g. No.
   h. No.
   i. Yes. - FAA Mobile FSS
   j. None.
   k. None.

SH
CNET
N44331
5/12/94

	FY93	FY92	FY91	FY90
l. Total -	446	291	431	594
-by Navy	426	N/A	N/A	N/A
-by other services	20	N/A	N/A	N/A
m. 1200-0400Z++ MON-FRI - 261 DAYS/16 HOURS = 4176 HOURS PER YEAR				
n. Total -	223	146	216	297
-by Navy	213	N/A	N/A	N/A
-by other services	10	N/A	N/A	N/A
o. Total -	223	146	216	297
-by Navy	213	N/A	N/A	N/A
-by other services	10	N/A	N/A	N/A

p. Visual Navigation training and point to point navigation.

Facilities

A. Air Space and Flight Training Areas (cont.)

1. **VR-1024**
   a. Visual Flight Route.
   b. N/A
   c. 55 miles.
   d. 13 minutes.
   e. N/A.
   f. FACSFAC Pensacola.
   g. No.
   h. No.
   i. Yes.
   j. None.
   k. None.
   l. 446.
      -by Navy 426.
      -by other services 20.
   m. 2.1%
   n. 5,840 hours.
   o. 223 hours.
      -by Navy 213 hours.
      -by other services 10 hours.
   p. 16 hours.
      -by Navy 213 hours.
      -by other services 10 hours.
   q. Visual Navigation training and point to point navigation.

Facilities (cont.)

A. Air Space and Flight Training Areas (cont.)

11. List all the Ranges (Controlled/managed by installation)

Range Name: NONE

a. List the range(s) that your installation controls/manages?
b. List the range's (s') associated airspace to include restricted areas, MOAs, etc.
c. What is the distance from the installation to the range(s) (primary target or centroid)?
d. What is the size of the range? (in acres)
   - What is the size of the range's(s') impact area(s) (in acres)?
   - What is the size of the restricted area in which the range lies (in square miles)?
   - What is the altitude ceiling of the range's(s') restricted area(s)?
e. Does the range's(s') shape/location prohibit efficient training or significantly hamper mission accomplishment (i.e., single run-in headings, no pop patterns, etc)?
f. What other type of restrictions exist (i.e., limited hours, exercise only, ceiling precludes high altitude dive bomb deliveries, etc.)?
g. What flying squadron/aviation units are regular users (20 or more range periods per year) of the range(s)? List
h. What is the published availability of the range(s)?
   - How many hours (average per year for 1990 thru 1993) was the range(s) scheduled?
   - How many hours was the range(s) used (average per year for 1990 thru 1993, total of all users)?
   - Utilization (average used/average scheduled x 100 = %)
   - Give reasons for non-use.
i. Does the range(s) have full-scale weapons develivery (FSWD)/area scoring weapon system (ASWS) capability? Describe in detail.
   - What are the associated FSWD/ASWS restrictions?
j. Does the range(s) have any special weapons capability (shapes, laser-guided, etc.)?
   - What are the associated special weapons restrictions?
k. Does the range(s) have electronic warfare capability? Describe (unclassified) in detail.
   - What are the associated electronic warfare restrictions?
l. Are there any noise sensitive area (NSAs) associated with the range(s)? List.
   - Do any of the NSAs affect or threaten the quality of training? (Explain)
m. Are there commercial/civilian encroachment problems associated with the range(s)? Describe.
   - Do any of these encroachments affect or threaten the quality of training? (Explain)
n. Describe problems (if any) with hazardous material/waste/ordnance disposal?
o. What is the status of any MOU/A or Letters of Agreement (LOA) associated with range?
   - Is there a prospect of the range having a diminished training capacity when the MOU/A or LOA is renewed? If yes, explain.
p. Is it possible to increase utilization of the range(s) (expand hours, volume)?
q. Are there any planned range real property expansions? Describe.
   - What is community reaction to your proposal?

Facilities (cont.)

A. Air Space and Flight Training Areas (cont)

12. List all the other air-to-ground training ranges not controled or managed by your installation within 100 nmi. For each range, provide the following data:

Range Name: Shelby Range

a. Location (city/county and state and lattitude and longitude) **Perry County, MS 31 07 56N 88 38 49W**
b. Distance from main airfield **45 mi.**
c. Time en route from main airfield **10 minutes**
d. Controlling agency **ARNG, MS**
e. Scheduling agency **ANG CRTC, Gulfport, MS**
f. Are canned/stereo airways needed to access air space? **No**
   - If so, how many?
   - If so, what types (i.e., IFR, VFR, or altitude reservation)?
g. Is the airspace under radar coverage? **Yes**
   - If so who provides the coverage? **Houston Center**
h. Is the airspace under communications coverage? **Yes**
   - If so who provides the coverage? **ANG, MS**
i. Number of low level airways (below 18,000 ft) that bisect airspace **1**
j. Number of high altitude airways (above 18,000 ft) that bisect airspace **Unknown**
k. Total number of sorties flown in FY 1990 thru 1993
   - By your service **0**
   - By other services (including reserves and national guard) **6,000**
l. Total number of available hours in FY 1990 thru 1993 **1,200**
m. Total number of scheduled hours in FY 1990 thru 1993
   - By your service **0**
   - By other services (including reserves and national guard) **7,500**
n. Total number of hours used
   - By your service **0**
   - By other services (including reserves and national guard) **6,500**
o. Types of training permitted **Air To Ground Bombing, Straffing, and Threat Simulator.**

Range Name: Test Area C-62

a. Location (city/county and state and lattitude and longitude) **Eglin AFB, 30 38 34N 86 13 37W**
b. Distance from main airfield **56 mi.**
c. Time en route from main airfield **14 minutes**
d. Controlling agency **Eglin AFB**
e. Scheduling agency **46 OSS/OSCSP**
f. Are canned/stereo airways needed to access air space? **No**
   - If so, how many?
   - If so, what types (i.e., IFR, VFR, or altitude reservation)?

g. Is the airspace under radar coverage? **Yes**
   - If so who provides the coverage? **Eglin Radar Control Facility**

h. Is the airspace under communications coverage? **Yes**
   - If so who provides the coverage? **Eglin Radar Control Facility**

i. Number of low level airways (below 18,000 ft) that bisect airspace **None**

j. Number of high altitude airways (above 18,000 ft) that bisect airspace **None**

k. Total number of sorties flown in FY 1990 thru 1993
   - By your service **0**
   - By other services (including reserves and national guard) **Unknown**

l. Total number of available hours in FY 1990 thru 1993 **Unknown**

m. Total number of scheduled hours in FY 1990 thru 1993
   - By your service **0**
   - By other services (including reserves and national guard) **Unknown**

n. Total number of hours used
   - By your service **0**
   - By other services (including reserves and national guard) **Unknown**

o. Types of training permitted **Bombing, Simulated Nuclear and Conventional Bombing and Rocketry, Skip Bomb, and Tactical Straffing.**

13. Describe the major air traffic structure (routes, terminal control areas, approaches, etc.) within 50 NM of each air-to-ground range, airspace, and airfield.

The following are special use airspace within 50 nautical miles of NAS Pensacola: W-155, W-453, Pensacola South MOA, Penasola North MOA, R-2908, VR-1024, IR-021, and IR-038.

The following are NAS Pensacola instrument approaches:

HI-NDB (UHF)/DME-A	**HI-NDB (UHF)/DME RWY 7A**
HI VOR RWY 19	**HI-TACAN RWY 1**
HI-TACAN RWY 7L	**HI-TACAN RWY 7R**
HI-TACAN RWY 25L	**HI-TACAN RWY 25R**
VOR RWY 19	**TACAN RWY 1**
TACAN RWY 7L	**TACAN RWY 7R**
TACAN RWY 19	**TACAN RWY 25L**
TACAN RWY 25R	

The following is NOLF Choctaw instrument approaches:

TACAN RWY 36

The following are NAS Pensacola standard instrument departures:

BREZZ-TWO DEPARTURE	**TRADR-FOUR DEPARTURE**
HARDE-EIGHT DEPARTURE	**PATTE-ONE DEPARTURE (PATTE 1-TRADR)**

14. Are installation operations currently affected by the major air traffic structures (routes, terminal control areas, approaches, etc.) within 50 NM of each air-to-ground range, airspace, and airfield? If so, describe the effect. **None**

15. Are there planned changes to the major air traffic structures (routes, terminal control areas, approaches, etc.) in the region? If so, will these changes affect installation operations. Describe the effect.

No

Facilities (cont.)

A. Air Space and Flight Training Areas (cont)

16. Does the current system of air traffic control (ATC) routes limit aircraft flights between the installation and all associated training areas? If so, describe these limitations. **No**

17. Does the installation experience any ATC delays on a regular basis? If so, describe the recurring causes for these delays and give the average duration. **No**

18. Are there any air traffic control constraints/procedures listed in the current Air Ops manual/AICUZ study that currently, or may in the future, limit installation operations?

~~**FCLP's are prohibited at NAS Pensacola without a waiver due to noise abatement.**~~ CNATRA N3
FCLP CAN BE CONDUCTED AT NAS PENSACOLA WITH PERMISSION OF THE WING CDR

19. Does the current airspace which you schedule/control permit advanced fighter training? If not, explain why. **Yes**

20. Is there airspace within 50 NM which permits advanced fighter training? **Yes**

21. Does the current airspace configuration permit advanced helicopter training? If not, explain why. **Yes**

22. Does the airspace configuration prohibit other types of undergraduate pilot training? If so, explain why. **No**

23. For each syllabus of undergraduate pilot and/or NFO/Navigator flight training, state whether you require any specific terrain feature or overwater access for training.

VT-4 Advanced E2/C2

Stage of Training	Terrain Feature or Overwater Requirement
Familiarization	Overland required
Basic Instrument	No Preference
Radio Instrument	No Preference
Formation	Overland Preferred
Airway Navigation	No Preference
Visual Navigation	Overland Required
Out-of-control Flight	Overland Preferred
Carrier Qualifications	Overwater Required

VT-86 Advanced NFO Training

Stage	OJN	RIO	TN
Radar Navigation	LR	NA	LR
Surface Search	WR	NA	WR
Low Level	LR	LR	LR
AirwaysNav/Radar/Low Level	LR/WR	LR/WR	LR/WR
Familiarization	LR	LP/WP	LR/WR
Tactical Low Level	NA	LR	LR
Advanced Tactical Maneuvers	NA	NP	NA
Pursuit Intercepts	NA	NP	NA
Attack/Reattack Intercepts	NA	NP	NA
Conversion Intercepts	NA	NP	NA
Unknown Intercepts	NA	NP	NA
Advanced Intercepts	NA	NP	NA

VT-10 Primary and Intermediate NFO Training

Stage	PRIMARY	INTERMEDIATE
Low Level VNAV		LR
AirwaysNav		LR
Familiarization	LR	
NAV	LR	
INAV	LR	
FORM		NP

Key: LR (Overland Required) WR (Overwater Required) NP (No Preference)
LP (Overland Preferred) WP (Overwater Preferred) NA (Not Applicable)

Facilities (cont.)

B. Airfields

1. For the main airfield(s) and each auxiliary and outlying field/staging base, provide the following data

Airfield Name: Sherman Field

a. Location (city/county and state and lattitude and longitude) **Pensacola, Escambia County, FL; 302111N 0871913W**
b. Distance from main field: **N/A**
c. Does the airfield have more than one runway complex that can conduct independent (i.e., concurrent) flight operations? **No**
d. Does the airfield have parallel or dual offset runways? **Parallel**
- If the airfield has parallel or dual offset runways, do they permit dual IFR flight operations? **No**
e. Does the airfield have full-length parallel taxiways? **Yes**
f. Does the airfield have high speed taxiways? **No**
g. Does the airfield have a crosswind runway? **Yes**
h. If conditions force the use of this runway, does the airfield lose flight ops capacity? **Yes**
i. How much capacity is lost? ~~**30% (max capacity)**~~ 48% CNATRANS
j. What percent of the time do conditions force the crosswind runway to be used? **18%**
k. Is the airfield equipped to support IFR flight operations? **Yes**
l. Is the airfield owned by your service or leased? **Owned by Navy**
m. Discuss any runway design features that are specific to particular types of training aircraft (e.g., are the airfield facilities designed primarily for helo, prop or jet training aircraft). **N/A**

Airfield Name: OLF Choctaw

a. Location (city/county and state and lattitude and longitude) **Milton, Santa Rosa County, FL; 303025N 0865735W**
b. Distance from main field: **20 mi. east**
c. Does the airfield have more than one runway complex that can conduct independent (i.e., concurrent) flight operations? **No**
d. Does the airfield have parallel or dual offset runways? **No**
- If the airfield has parallel or dual offset runways, do they permit dual IFR flight operations? **N/A**
e. Does the airfield have full-length parallel taxiways? **Yes**
f. Does the airfield have high speed taxiways? **No**
g. Does the airfield have a crosswind runway? **No**
h. If conditions force the use of this runway, does the airfield lose flight ops capacity? **N/A**
i. How much capacity is lost? **N/A**
j. What percent of the time do conditions force the crosswind runway to be used? **N/A**
k. Is the airfield equipped to support IFR flight operations? **Yes (local use only)**
l. Is the airfield owned by your service or leased? **Owned by USAF with exclusive useage granted to Navy.**
m. Discuss any runway design features that are specific to particular types of training aircraft (e.g., are the airfield facilities designed primarily for helo, prop or jet training aircraft). **N/A**

Revised page

Airfield Name: <u>OLF Bronson</u> (closed)

a. Location (city/county and state and lattitude and longitude) **Pensacola, Escambia County, FL; 302304N 0872425W**
b. Distance from main field: **5 mi. west**
c. Does the airfield have more than one runway complex that can conduct independent (i.e., concurrent) flight operations? **No**
d. Does the airfield have parallel or dual offset runways? **No**
- If the airfield has parallel or dual offset runways, do they permit dual IFR flight operations?
e. Does the airfield have full-length parallel taxiways? **Yes**
f. Does the airfield have high speed taxiways? **No**
g. Does the airfield have a crosswind runway? **Yes**
h. If conditions force the use of this runway, does the airfield lose flight ops capacity? **No**
i. How much capacity is lost? **N/A**
j. What percent of the time do conditions force the crosswind runway to be used? ***N/A (Before being closed, field was utilized by rotary wing NOT fixed wing aircraft).***
k. Is the airfield equipped to support IFR flight operations? **No**
l. Is the airfield owned by your service or leased? **Owned**
m. Discuss any runway design features that are specific to particular types of training aircraft (e.g., are the airfield facilities designed primarily for helo, prop or jet training aircraft). **Helo use only.**
*** 4,000' runway - inadequate.**

Airfield Name: <u>Chevalier Field</u> (closing) Helo use only (SITE OF FUTURE NATTC)

a. Location (city/county and state and lattitude and longitude) **NAS Pensacola, Escambia County, FL; 3021N 08716W**
b. Distance from main field: **3 mi. east**
c. Does the airfield have more than one runway complex that can conduct independent (i.e., concurrent) flight operations? **Helo pad only**
d. Does the airfield have parallel or dual offset runways? **N/A**
- If the airfield has parallel or dual offset runways, do they permit dual IFR flight operations? **N/A**
e. Does the airfield have full-length parallel taxiways? **N/A**
f. Does the airfield have high speed taxiways? **N/A**
g. Does the airfield have a crosswind runway? **N/A**
h. If conditions force the use of this runway, does the airfield lose flight ops capacity? **N/A**
i. How much capacity is lost? **N/A**
j. What percent of the time do conditions force the crosswind runway to be used? **N/A**
k. Is the airfield equipped to support IFR flight operations? **N/A**
l. Is the airfield owned by your service or leased? **N/A**
m. Discuss any runway design features that are specific to particular types of training aircraft (e.g., are the airfield facilities designed primarily for helo, prop or jet training aircraft). **Helo only**

Airfield Name: <u>OLF Bronson</u> (closed)

a. Location (city/county and state and lattitude and longitude) **Pensacola, Escambia County, FL; 302304N 0872425W**

b. Distance from main field: **5 mi. west**

c. Does the airfield have more than one runway complex that can conduct independent (i.e., concurrent) flight operations? **No**

d. Does the airfield have parallel or dual offset runways? **No**

- If the airfield has parallel or dual offset runways, do they permit dual IFR flight operations?

e. Does the airfield have full-length parallel taxiways? **Yes**

f. Does the airfield have high speed taxiways? **No**

g. Does the airfield have a crosswind runway? **Yes**

h. If conditions force the use of this runway, does the airfield lose flight ops capacity? **No**

i. How much capacity is lost? **N/A**

j. What percent of the time do conditions force the crosswind runway to be used?

k. Is the airfield equipped to support IFR flight operations? **No**

l. Is the airfield owned by your service or leased? **Owned**

m. Discuss any runway design features that are specific to particular types of training aircraft (e.g., are the airfield facilities designed primarily for helo, prop or jet training aircraft). **Helo use only.**
*** 4,000' runway - inadequate.**

Airfield Name: <u>Chevalier Field</u> (closing) Helo use only (SITE OF FUTURE NATTC)

a. Location (city/county and state and lattitude and longitude) **NAS Pensacola, Escambia County, FL; 3021N 08716W**

b. Distance from main field: **3 mi. east**

c. Does the airfield have more than one runway complex that can conduct independent (i.e., concurrent) flight operations? **Helo pad only**

d. Does the airfield have parallel or dual offset runways? **N/A**

- If the airfield has parallel or dual offset runways, do they permit dual IFR flight operations? **N/A**

e. Does the airfield have full-length parallel taxiways? **N/A**

f. Does the airfield have high speed taxiways? **N/A**

g. Does the airfield have a crosswind runway? **N/A**

h. If conditions force the use of this runway, does the airfield lose flight ops capacity? **N/A**

i. How much capacity is lost? **N/A**

j. What percent of the time do conditions force the crosswind runway to be used? **N/A**

k. Is the airfield equipped to support IFR flight operations? **N/A**

l. Is the airfield owned by your service or leased? **N/A**

m. Discuss any runway design features that are specific to particular types of training aircraft (e.g., are the airfield facilities designed primarily for helo, prop or jet training aircraft). **Helo only**

Facilities (cont.)

B. Airfields (cont.)

2. For the category codes listed below, most installations will need to conduct an in-house survey to accurately capture the condition of these facilities. This survey is required because, in most cases, Real Property Records lump all pavements and utility distribution systems under one facility number. The condition of these facilities is determined by the predominant condition of the entire system. This does not accurately indicate the true condition of the entire system and, therefore, necessitates a survey so you can report the percent of the system that is Adquate/Permanent, Substandard/Semi-Permanent and Inadequate/Temporary. When the bases do these surveys, it is vitally important they be auditable. Bases should have hard documentation to show exactly how they arrived at condition codes for each segment of the category codes listed below.

Facility Type (CCN)	Facility Description	Unit of Measure	Current Quantity	Adequate/ Permanent	Substandard/ Semi-Permanent	Inadequate/ Temporary
111	Airfield Pavement-Runways (Do not include shoulders or overruns)	SY	*1,801,724*	*837,607*	*547,029*	*417,088*
112	Airfield Pavements-Taxiways (Do not include shoulders)	SY	389,176	*367,927*	*21,249*	0
113	Airfield Pavements-Aprons (Do not include shoulders)	SY	*685,769*	*147,809*	537,960	0
116-662	Dangerous Cargo Pad	SY	NA	NA	NA	NA
812	Elec Power-Trans & Distr Lines (Overhead & U/G, Pri & Sec Lines) (Do not include 812-921, 812-926 and 812-928)	LF	12,641	12,641	0	0

SH
CNET
N44331
5/11/94

Facilities (cont.)

B. Airfields (cont.)

2. For the category codes listed below, most installations will need to conduct an in-house survey to accurately capture the condition of these facilities. This survey is required because, in most cases, Real Property Records lump all pavements and utility distribution systems under one facility number. The condition of these facilities is determined by the predominant condition of the entire system. This does not accurately indicate the true condition of the entire system and, therefore, necessitates a survey so you can report the percent of the system that is Adquate/Permanent, Substandard/Semi-Permanent and Inadequate/Temporary. When the bases do these surveys, it is vitally important they be auditable. Bases should have hard documentation to show exactly how they arrived at condition codes for each segment of the category codes listed below.

Facility Type (CCN)	Facility Description	Unit of Measure	Current Quantity	Adequate/ Permanent	Substandard/ Semi-Permanent	Inadequate/ Temporary
111	Airfield Pavement-Runways (Do not include shoulders or overruns)	SY	1,724,224	760,107	452,586	511,531
112	Airfield Pavements-Taxiways (Do not include shoulders)	SY	389,176	389,176	0	0
113	Airfield Pavements-Aprons (Do not include shoulders)	SY	606,436	68,476	537,960	0
116-662	Dangerous Cargo Pad	SY	NA	NA	NA	NA
812	Elec Power-Trans & Distr Lines (Overhead & U/G, Pri & Sec Lines) (Do not include 812-921, 812-926 and 812-928)	LF	12,641	12,641	0	0

Revised Pg NAS Pensacola
UIC 00204

Forrest Sherman Field	Adequate	Substandard	Inadequate
Runways 110-10	526,774	0	0
Taxiways 112-XY	257,685	0	0
Parking Aprons 113-20	79,333	294,911	0
TOTAL	**863,792**	**294,911**	**0**
OLF Choctaw			
Runways 110-10	233,333	77,778	74,095
Taxiways 112-XY	110,242	0	0
Parking Aprons 113-20	31,920	0	0
TOTAL	**375,495**	**77,778**	**74,095**
OLF Bronson	**(OLF Bronson is a closed facility which is not suitable for fixed wing training)**		
Runways 110-15	0	469,251	342,993
Taxiways 112-XY	0	21,249	0
Parking Aprons 113-20	0	210,759	0
TOTAL	**0**	**701,259**	**342,993**

Note: Above does not include CCN 111-20 & CCN 113-40.

SH (HERTEL)
CNET N4434
8/17/94

Encl (2)

37a-R 4 Aug 94

Facilities (cont.)

B. Airfields (cont.)

Facility Type (CCN)	Facility Description	Unit of Measure	Current Quantity	Adequate/ Permanent	Substandard/ Semi-Permanent	Inadequate/ Temporary
822	Heat-Trans & Distr Lines (Do not include 822-248 and 822-268)	LF	3,100	3,100	0	0
832	Sewage and Industrial Waste-Collection (Mains) (Do not include 832-267)	LF	284,011	284,011	0	0
842	Water-Distr Sys-Potable (Do not include 842-246 and 842-249)	LF	37,480	0	0	0
843	Water-Fire Protection (Mains) (Do not include 843-315, 843-316 and 843-319)	LF	NA	NA	NA	NA
851	Roads (Do not include 851-142 and 851-143)	SY	1,094,362	999,473	87,111	7,778
852	Veh/Equip Parking (Do not include 852-282, 852-287 and 852-289)	SY	542,687	95,248	447,439	0

Facilities (cont.)

B. Airfields (cont.)

3. List the major facility assets (using your service specific list by 5 digit category code number (CCN)) under installation control (e.g., runway, parking apron, hangars, terminal, administrative spaces) and assess their material condition by indicating the quantities that are adequate/permanent, substandard/semi-permanent and inadequate/temporary. Specify how the facility is used if it is not obvious from its CCN.

Facility Type (CCN)	Facility Use	Unit of Measure	Adequate/ Permanent	Substandard/ Semi-Permanent	Inadequate/ Temporary
111-10	Runways, Fixed Wing	SY	760,107	77,778	74,095
111-15	Runways, Rotary Wing	SY	0	469,251	342,993
111-20	Landing Pad	SY	77,500	0	0
113-20	Parking Apron	SY	111,253	505,670	0
113-40	Access Apron	SY	36,556	32,290	0
133-72	RATCC Center	SF	0	0	8,247
137-10	Oceanographic Building	SF	3,246	0	0
141-11	Air Passenger Terminal	SF	3,206	0	0
141-70	Control Tower	SF	0	0	2,364
211-05	Maintenance Hangar OH Space	SF	111,582	0	0
211-06	Maintenance Hangar 01 Space	SF	74,359	0	0
211-07	Maintenance Hangar 02 Space	SF	71,380	0	0
211-08 211-21 211-45 211-75	Aviation Shops (Non-NARF)	SF	31,719	0	0
610-10	Admin Office	SF	~~21,460~~	~~0~~	~~0~~
			579,908	56,957	22,423

SH
CNET
N44331
6/12/94

Facilities (cont.)

B. Airfields (cont.)

4. An inadequate/temporary facility cannot be made adequate/permanent for its present use through "economically justifiable means." For all the categories above where inadequate/temporary facilities are identified provide the following information:

a. Facility Type/Code: **Runway, Fixed Wing (OLF Choctaw), 111-10**
b. What makes it inadequate/temporary? **Total pavement obsolescence**
c. What use is being made of the facility? **None**
d. What is the cost to upgrade the facility to substandard/semi-permanent? **$750K**
e. What other use could be made of the facility and at what cost? **Parking apron, open storage; $0**
f. Current improvement plans and programmed funding: **None**
g. Has this facility condition resulted in "C3" or "C4" designation on your BASEREP? **No**

a. Facility Type/Code: **Runway, Rotary Wing (OLF Bronson), 111-15**
b. What makes it inadequate/temporary? **Functional criteria, total structure**
c. What use is being made of the facility? **None**
d. What is the cost to upgrade the facility to substandard/semi-permanent? **1.8M**
e. What other use could be made of the facility and at what cost? **Parking apron, open storage; $0**
f. Current improvement plans and programmed funding: **None**
g. Has this facility condition resulted in "C3" or "C4" designation on your BASEREP? **Yes, C3**

a. Facility Type/Code: **RATCC Center, 133-72**
b. What makes it inadequate/temporary? **Functional criteria, Size configuration**
c. What use is being made of the facility? **RATCC Center**
d. What is the cost to upgrade the facility to substandard/semi-permanent? **Not feasible**
e. What other use could be made of the facility and at what cost? **Training, Admin Office; $85,000**
f. Current improvement plans and programmed funding: **To be replaced by MILCON P-623**
g. Has this facility condition resulted in "C3" or "C4" designation on your BASEREP? **Yes, C3**

a. Facility Type/Code: **Control Tower, 141-70**
b. What makes it inadequate/temporary? **Functional criteria, blind spots**
c. What use is being made of the facility? **Control Tower**
d. What is the cost to upgrade the facility to substandard/semi-permanent? **Not feasible**
e. What other use could be made of the facility and at what cost? **None**
f. Current improvement plans and programmed funding: **To be replaced by MILCON P-620**
g. Has this facility condition resulted in "C3" or "C4" designation on your BASEREP? **Yes, C3**

R

Facilities (cont.)

C. Ground Training Facilities

1. List ground training facilities at the installation that support pilot and/or NFO/Navigator training (e.g., classrooms, pistol ranges, water survival facilities). Provide the 5 digit category code number (CCN) where possible. Indicate if these facilities are unique or if they include any specialized equipment and assess their material condition by indicating the quantities that are adequate/permanent, substandard/semi-permanent and inadequate/temporary. Specify how the facility is used if it is not obvious from its CCN.

Facility Type (CCN)	Facility Use	Unit of Measure	Adequate/ Permanent	Substandard/ Semi-Permanent	Inadequate/ Temporary
171-10	Academic Inst Building	SF	24,362	0	1,850
171-20	Applied Inst Building ***	SF	10,344	0	0
171-20	#58 LAND SURVIVAL **, ***	SF	0	0	Note 1
171-20	#75 BAY OPS **, ***	SF	0	0	Note 2
171-20	#633 ACAD INSTR ***	SF	96,778	0	0
171-20	#671 Water Devices *** (Note 3)	SF	30,369	0	0
171-20	#3828 SWIM/PT *** (Note 4)	SF	50,000	0	0
171-20	#3845 NAMI Chamber ***	SF	24,700	0	0
171-35	Operational Trainer Facility ***	SF	33,451	0	0
171-35	#3801 NAMI CLASSROOMS/ MSDD TRAINER ***	SF	26,811	0	0
179-40	Small Arms Range	EA	1	0	0
179-45	#3238 SURV TRNG PIER **, *** (Note 5)	EA	1	0	0
179-60	Parade and Drill Field	EA	1	0	0
179-50	#2683 O'COURSE *** (Note 6)	EA	1	0	0

R

Facilities (cont.)

C. Ground Training Facilities

1. List ground training facilities at the installation that support pilot and/or NFO/Navigator training (e.g., classrooms, pistol ranges, water survival facilities). Provide the 5 digit category code number (CCN) where possible. Indicate if these facilities are unique or if they include any specialized equipment and assess their material condition by indicating the quantities that are adequate/permanent, substandard/semi-permanent and inadequate/temporary. Specify how the facility is used if it is not obvious from its CCN.

Facility Type (CCN)	Facility Use	Unit of Measure	Adequate/ Permanent	Substandard/ Semi-Permanent	Inadequate/ Temporary	
171-10	Academic Inst Building	SF	24,362	0	1,850	R
171-20	Applied Inst Building	SF	10,344	0	0	R
171-35	Operational Trainer Facility	SF	33,451	0	0	
179-40	Small Arms Range	EA	1	0	0	
179-45	Survival Training Pier	EA	1	0	0	
179-50	Obstacle Course	EA	1	0	0	
179-60	Parade and Drill Field	EA	1	0	0	
171-20	#58 LAND SURVIVAL ** (Note 1)	SF	0	0	8,296	
171-20	#75 BAY OPS ** (Note 2)	SF	0	0	24,068	
171-20	#633 ACAD INSTR	SF	96,778	0	0	
171-20	#671 WATER DEVICES (Note 3)	SF	30,369	0	0	
171-20	#3828 SWIM/PT (Note 4)	SF	50,000	0	0	
171-20	#3845 NAMI CHAMBER	SF	24,700	0	0	R
171-35	#3801 NAMI CLASSROOMS/ MSDD TRAINER	SF	6,640	0	0	
179-45	#3238 SURV TRNG PIER ** (Note 5)	EA	0	0	1	
179-50	#2683 O'COURSE (Note 6)	EA	1	0	0	

Facilities (cont.)

C. Ground Training Facilities

1. List ground training facilities at the installation that support pilot and/or NFO/Navigator training (e.g., classrooms, pistol ranges, water survival facilities). Provide the 5 digit category code number (CCN) where possible. Indicate if these facilities are unique or if they include any specialized equipment and assess their material condition by indicating the quantities that are adequate/permanent, substandard/semi-permanent and inadequate/temporary. Specify how the facility is used if it is not obvious from its CCN.

Facility Type (CCN)	Facility Use	Unit of Measure	Adequate/ Permanent	Substandard/ Semi-Permanent	Inadequate/ Temporary
171-10	Academic Inst Building	SF	49,394	0	2,850
171-20	Applied Inst Building	SF	377,319	22,113	32,364
171-35	Operational Trainer Facility	SF	33,451	0	0
179-40	Small Arms Range	EA	1	0	0
179-45	Survival Training Pier	EA	1	0	0
179-50	Obstacle Course	EA	1	0	0
179-60	Parade and Drill Field	EA	1	0	0
171-20	#58 LAND SURVIVAL ** 1	SF			8,296
171-20	#75 BAY OPS ** 2	SF			24,068
171-20	#633 ACAD INSTR	SF	96,778		
171-20	#671 WATER DEVICES 3	SF	30,369		
171-20	#3828 SWIM/PT 4	SF	50,000		
171-20	#3845 NAMI CHAMBER	SF	A-13,384	S-3,783	I-16,890
171-35	#3801 NAMI CLASSROOMS/ MSDD TRAINER	SF	A-6,640		
179-45	#3238 SURV TRNG PIER ** 5	EA			1
179-50	#2683 O'COURSE 6	EA	1		

Facility Type (CCN)	Facility Use	Unit of Measure	Adequate/ Permanent	Substandard/ Semi-Permanent	Inadequate/ Temporary
137-10	#1852 Aviation Meteorological Training (Note 7) ***	SF	3,246	0	0
141-40	#1852 Flight Planning Room 116 (Note 8)	SF	416	0	0
	#1852 Flight Briefing Room 118 (Note 8)	SF	256	0	0
740-56	#633 Station Theater (Note 9)	SF	17,814	0	0
740-60	Officer's Club (Note 10)	SF	31,196	0	0
171-10	#1954 NAMI Auditorium	SF	2,400	0	0
171-20	#3860 Milcon Project P568 ~~Land~~ Survival Building (Note 12)	SF	52,939	0	0

AOA
HEARD
CNET N-4113
27 Oct 94

Facility Type (CCN)	Facility Use	Unit of Measure	Adequate/ Permanent	Substandard/ Semi-Permanent	Inadequate/ Temporary
137-10	#1852 Aviation Meteorological Training (Note 7)	SF	3,246	0	0
141-40	#1852 Flight Planning Room 116 (Note 8)	SF	416	0	0
	#1852 Flight Briefing Room 118 (Note 8)	SF	256	0	0
740-56	#633 Station Theater (Note 9)	SF	17,814	0	0
740-60	Officer's Club (Note 10)	SF	31,196	0	0
171-10	#1954 NAMI Auditorium (Note 11)	SF	2,400	0	0

Facility Type (CCN)	Facility Use	Unit of Measure	Adequate/ Permanent	Substandard/ Semi-Permanent	Inadequate/ Temporary
137-10	#1852 Aviation Meteorological Training (Note 7)	SF	3,246	N/A	N/A
141-40	#1852 Flight Planning Room 116 (Note 8)	SF	416	N/A	N/A
	#1852 Flight Briefing Room 118 (Note 8)	SF	256	N/A	N/A
740-56	#633 Station Theater (Note 9)	SF	17,814	N/A	N/A
740-60	Officer's Club (Note 10)	SF	31,196	N/A	N/A
171-10	#1954 NAMI Auditorium (Note 11)	SF	2,400	N/A	N/A

NOTES

1. Bldg 58 - Contains 8,296 SF of inadequate space and is used for Land Survival Student Training, Arboretum, and display of land survival techniques. Building is very small, outdated, has poor Heating/Air Conditioning and inferior classrooms. It is still being used for training until Building 3860 Milcon Project P-568 is finished. This building is planned to be torn down in the future and has not been designated C3 or C4 on the BASEREP.

2. Bldg 75 - Contains 24,068 SF of inadequate space and is used for Bay Operations training and maintenance of Water Survival Equipment (LPA's, Parasails, Helmets, etc.). Also used for Naval Aviation Water Survival Training Program (NAWSTP) Model Manager. This building is extremely old with poor Heating/Air Conditioning and has inadequate classrooms and administrative spaces. It is still being used until Building 3860 Milcon Project P-568 is finished. Building 75 has not been designated C3 or C4 on the BASEREP. This building is an old Seaplane Hanger and the future intentions are unknown.

3. Bldg 671 - Used for Training Devices training which includes five unique devices (Helo and Eject Seat Dunkers, Helo-Hoist, Parachute Drag, and Parachute Disentanglement) plus two large pools. All facilities are adequate and in good working order.

4. Bldg 3828 - Built in 1983/84 it is used for Survival Swim training, Physical fitness training and administration offices for Survival Department. All facilities are adequate and in good working order.

5. Bldg 3238 (Survival Training Pier) - Located next to Building 75, the Survival Pier is used for loading/off-loading students into utility boats for Parasail and Helo Hoist Training, and also for Slide-for-Life prerequisite training prior to Parasail operations.

6. Bldg 2683 (Obstacle Course) - The Obstacle Course is used to enhance coordination, improve individual strength, and to increase student endurance. All obstacles are adequate and in good structural condition.

7. As part of the API training curriculum, students are given a 1 hour familiarization lecture, per convening class, on meteorological equipment and utilization for aviation weather briefings.

8. Specific flight route planning/training and flight briefings are conducted in these rooms for student pilot/NFO and other pilot usage. Total of CCN 141-40 is 9,010 SF (8,338 SF is used for administration spaces).

9. Station theater is used by COMTRAWING SIX and NAVAVSCOLSCOM as an available asset as needed for large gatherings (e.g., aviation safety standdowns). Average use is 4 times a year for less than 4 hours per gathering per command. Training conducted in this facility is for non-curriculum related subjects.

10. Officers Club large ballroom estimated SF of 9,282 is used as an available asset by VT-4 at 2 hours a year, VT-10 at 6 hours per year, and VT-86 at 3 hours per month for non-curriculum training.

11. NAMI Auditorium is a large facility which is used as an available asset by VT-10 at 10 hours per year and VT-86 at 3 hours a quarter for non-curriculum training.

12. Building 3860 Milcon Project P-568 is planned for groundbreaking before January 1995, with a completion date of mid 1996. Current design scope provides 44,539 SF for Navy use, and 8,400 SF for USAF use. This building includes a 4,453 SF arboretum which is currently housed in Building 58. Once this facility is finished, it will replace Building 58 and 75.

** The new Survival Training Facility (CCN# 171-20 is planned for groundbreaking before January 1995, with a completion date of mid 1996. Funding has been approved through Military Construction Project #P-568 at a cost of 4.6 million dollars. The new facility will double the currently available square footage and will house Bay Operations (Building 75), an improved Survival Training Pier (Building 3238), Land Survival (Building 58), NAWSTP Model Manager (Building 75), plus a new contingent of Air Force personnel (from Homestead AFB).

NOTES

1. Bldg 58 - Used for Land Survival Student Training, Arboretum, and display of land survival techniques. Building is very small, outdated, has poor Heating/Air Conditioning and inferior classrooms. It is still being used for training while a new building is being built. This building is scheduled to be torn down and has not been designated C3 or C4 on the BASEREP.

2. Bldg 75 - Used for Bay Operations training and maintenance of Water Survival Equipment (LPA's, Parasails, Helmets, etc.). Also used for Naval Aviation Water Survival Training Program (NAWSTP) Model Manager. This building is extremely old with poor Heating/Air Conditioning and has inadequate classrooms and administrative spaces. It is still being used while a new building is being built. Building 75 has not been designated C3 or C4 on the BASEREP. This building is an old Seaplane Hanger and the future intentions are unknown.

3. Bldg 671 - Used for Training Devices training which includes five unique devices (Helo and Eject Seat Dunkers, Helo-Hoist, Parachute Drag, and Parachute Disentanglement) plus two large pools. All facilities are adequate and in good working order.

4. Bldg 3828 - Built in 1983/84 it is used for Survival Swim training, Physical fitness training and administration
offices for Survival Department. All facilities are adequate and in good working order.

5. Bldg 3238 (Survival Training Pier) - Located next to Building 75, the Survival Pier is used for loading/off-loading students into utility boats for Parasail and Helo Hoist Training, and also for Slide-for-Life prerequisite training prior to Parasail operations. The pier is in very poor condition and is being used while a new pier is being built. The pier has not been designated C3 or C4 on the BASEREP and will probably be torn down when the new Survival Building and Pier are completed.

6. Bldg 2683 (Obstacle Course) - The Obstacle Course is used to enhance coordination, improve individual strength, and to increase student endurance. All obstacles are adequate and in good structural condition.

7. As part of the API training curriculum, students are given a 1 hour familiarization lecture, per convening class, on meteorological equipment and utilization for aviation weather briefings.

8. Specific flight route planning/training and flight briefings are conducted in these rooms for student pilot/NFO and other pilot usage. Total of CCN 141-40 is 9,010 SF (8,338 SF is used for administration spaces).

9. Station theater is used by COMTRAWING SIX and NAVAVSCOLSCOM as an available asset as needed for large gatherings (e.g., aviation safety standdowns). Average use is 4 times a year for less than 4 hours per gathering per command. Training conducted in this facility is for non-curriculum related subjects.

10. Officers Club large ballroom estimated SF of 9,282 is used as an available asset by VT-4 at 2 hours a year, VT-10 at 6 hours per year, and VT-86 at 3 hours per month for non-curriculum training.

11. NAMI Auditorium is a large facility which is used as an available asset by VT-10 at 10 hours per year and VT-86 at 3 hours a quarter for non-curriculum training.

** The new Survival Training Facility (CCN# 171-20 is scheduled for groundbreaking in August 1994 with a completion date of October 1995. Funding has been approved through Military Construction Project #P-568 at a cost of 4.6 million dollars. The new facility will double the currently available square footage and will house Bay Operations (Building 75), an improved Survival Training Pier (Building 3238), Land Survival (Building 58), NAWSTP Model Manager (Building 75), plus a new contingent of Air Force personnel (from Homestead AFB).

NOTES

1. Bldg 58 - Used for Land Survival Student Training, Arboretum, and display of land survival techniques. Building is very small, outdated, has poor Heating/Air Conditioning and inferior classrooms. It is still being used for training while a new building is being built. This building is scheduled to be torn down and has not been designated C3 or C4 on the BASEREP.

2. Bldg 75 - Used for Bay Operations training and maintenance of Water Survival Equipment (LPA's, Parasails, Helmets, etc.). Also used for Naval Aviation Water Survival Training Program (NAWSTP) Model Manager. This building is extremely old with poor Heating/Air Conditioning and has inadequate classrooms and administrative spaces. It is still being used while a new building is being built. Building 75 has not been designated C3 or C4 on the BASEREP. This building is an old Seaplane Hanger and the future intentions are unknown.

3. Bldg 671 - Used for Training Devices training which includes five unique devices (Helo and Eject Seat Dunkers, Helo-Hoist, Parachute Drag, and Parachute Disentanglement) plus two large pools. All facilities are adequate and in good working order.

4. Bldg 3828 - Built in 1983/84 it is used for Survival Swim training, Physical fitness training and administration
offices for Survival Department. All facilities are adequate and in good working order.

5. Bldg 3238 (Survival Training Pier) - Located next to Building 75, the Survival Pier is used for loading/off-loading students into utility boats for Parasail and Helo Hoist Training, and also for Slide-for-Life prerequisite training prior to Parasail operations. The pier is in very poor condition and is being used while a new pier is being built. The pier has not been designated C3 or C4 on the BASEREP and will probably be torn down when the new Survival Building and Pier are completed.

6. Bldg 2683 (Obstacle Course) - The Obstacle Course is used to enhance coordination, improve individual strength, and to increase student endurance. All obstacles are adequate and in good structural condition.

** The new Survival Training Facility (CCN# 171-20 is scheduled for groundbreaking in August 1994 with a completion date of October 1995. Funding has been approved through Military Construction Project #P-568 at a cost of 4.6 million dollars. The new facility will double the currently available square footage and will house Bay Operations (Building 75), an improved Survival Training Pier (Building 3238), Land Survival (Building 58), NAWSTP Model Manager (Building 75), plus a new contingent of Air Force personnel (from Homestead AFB).

2. An inadequate/temporary facility cannot be made adequate/permanent for its present use through "economically justifiable means." For all the categories above where inadequate/temporary facilities are identified provide the following information:

a. Facility Type/Code: **Academic Inst Bldg (B1, 654), 171-~~120~~** 10 SHL CNET N44331 5/11/94
b. What makes it inadequate/temporary? **Structural & Electrical condition, functional criteria**
c. What use is being made of the facility? **Academic Inst**
d. What is the cost to upgrade the facility to substandard/semi-permanent? **140K**
e. What other use could be made of the facility and at what cost? **Admin Storage; $0**
f. Current improvement plans and programmed funding: **None**
g. Has this facility condition resulted in "C3" or "C4" designation on your BASEREP? **No**

2. An inadequate/temporary facility cannot be made adequate/permanent for its present use through "economically justifiable means." For all the categories above where inadequate/temporary facilities are identified provide the following information:

a. Facility Type/Code: **Academic Inst Bldg (B1, 654), 171-*10***
b. What makes it inadequate/temporary? **Structural & Electrical condition, functional criteria**
c. What use is being made of the facility? **Academic Inst**
d. What is the cost to upgrade the facility to substandard/semi-permanent? **140K**
e. What other use could be made of the facility and at what cost? **Admin Storage; $0**
f. Current improvement plans and programmed funding: **None**
g. Has this facility condition resulted in "C3" or "C4" designation on your BASEREP? **No**

*** These facilities are used for Aviation Preflight Indoctrination training. Average amount of seats per classroom is approximately 30, estimated average size classroom is 900 SF. CCN 171-20 has the following breakout of classrooms:

Bldg 58 - 2 classrooms
Bldg 75 - 2 classrooms
Bldg 633 - 6 classrooms
Bldg 671 - 1 classroom
Bldg 3828 - 1 classroom
Bldg 3845 - 1 classroom

NOTE: Bldg 3860, MILCON Project 568 will absorb class rooms listed in Bldgs 58 & 75 CCN 171-35 has only 1 classroom in Bldg 3801.

2. An inadequate/temporary facility cannot be made adequate/permanent for its present use through "economically justifiable means." For all the categories above where inadequate/temporary facilities are identified provide the following information:

a. Facility Type/Code: **Academic Inst Bldg (B1, 654), 171-*10***
b. What makes it inadequate/temporary? **Structural & Electrical condition, functional criteria**
c. What use is being made of the facility? **Academic Inst**
d. What is the cost to upgrade the facility to substandard/semi-permanent? **140K**
e. What other use could be made of the facility and at what cost? **Admin Storage; $0**
f. Current improvement plans and programmed funding: **None**
g. Has this facility condition resulted in "C3" or "C4" designation on your BASEREP? **No**

R

Facilities (cont.)

C. Ground Training Facilities

a. Facility Type/Code: **Applied Inst Bldg (B58, 75), 171-20**
b. What makes it inadequate/temporary? **Total obsolescence**
c. What use is being made of the facility? **Applied Inst**
d. What is the cost to upgrade the facility to substandard/semi-permanent? **1.7M**
e. What other use could be made of the facility and at what cost? **Storage; $0**
f. Current improvement plans and programmed funding: **To be demolished and replaced by MILCON P-568, FY94**
g. Has this facility condition resulted in "C3" or "C4" designation on your BASEREP? **Yes**

Facilities (cont.)

C. Ground Training Facilities

a. Facility Type/Code: **Applied Inst Bldg (B58, 75), 171-20**
b. What makes it inadequate/temporary? **Total obsolescence**
c. What use is being made of the facility? **Applied Inst**
d. What is the cost to upgrade the facility to substandard/semi-permanent? **1.7M**
e. What other use could be made of the facility and at what cost? **Storage; $0**
f. Current improvement plans and programmed funding: **To be demolished and replaced by MILCON P-568, FY94**
g. Has this facility condition resulted in "C3" or "C4" designation on your BASEREP? **Yes**

a. Facility Type/Code: **NAMI 171-20 AND 171-35**
b. What makes it inadequate/temporary? **3845: I = over crowded**
c. What use is being made of the facility? **3845: APT/ALT/Ejection Seat training.**
d. What is the cost to upgrade the facility to substandard/semi-permanent? **Unknown**
e. What other use could be made of the facility and at what cost? **School house**
f. Current improvement plans and programmed funding: **None**
g. Has this facility condition resulted in "C3" or "C4" designation on your BASEREP? **No**

Facilities (cont.)

D. Aircraft Maintenance Facilities

1. Complete the following table for each type of aircraft which can be maintained at your installation. Place an "x" in the applicable columns for each type of aircraft.

Aircraft Types	Level of Maintenance			Source	
	Depot	Intermediate	Organizational	DOD	Contract
C-12			X		X
H-3			X	X	
T-2		X	X		X
T-34			X		X
T-39			X		X

Blue Angels

Aircraft Types	Level of Maintenance			Source	
	Depot	Intermediate	Organizational	DOD	Contract
F/A-18			X	X	
C-130			X	X	

Facilities (cont.)

E. Special Military Facilities

1. List all facilities and equipment that play a special role in military operations (e.g., radar, communications, command and control, oceanographic facilities) of the aircraft at the installation.

Type of Facility	Operational Mission of Facility
Helicopter Landing Trainer (IX 514)	Provide a certified deck for initial small deck landing qualification for student naval aviators and small deck landing currency requirements for USN, USA, USAF, USCG, and civilian contract pilots.
NAVLANTMETOCDET	Provide full spectrum environmental support.
FACSFAC	A Class VB Joint Control Facility, provides airport traffic control and low-approach landing services with full pattern control, and the Navy Tactical Data System/Advanced Combat Direction System (NTDS/ACDS) provides a variety of services to air, surface and subsurface units. These services are provided to both military and civilian users.
SAR Det	Provide SAR coverage 200 nmi. surrounding NAS Pensacola.

2. Contingency and Deployment Requirements:
(Assume full mobilization, sustained 24-hour capability)

a. Can airfield handle wide-body aircraft (e.g. C-5, KC-10, E-3A, 747) transient operations, (e.g., parking, fueling, loading)? **Yes. Air station has only one direct fueling unit, therefore, refueling of several large aircraft will be a slow process.**

3. Does installation have a dedicated munitions loading pad? **Yes**
a. If yes, are there any access limitations? **Yes. Could hamper operations on adjacent runway. Designated torpex recovery area at approach of runway 1 is used as a staging area for hazardous material/weapons. Departure is directly south over water. Explosive restriction is limited to 1.2 as per OP-5.**
b. What type aircraft have used your pad over the last five years? **C-130.**

4. Is the installation located within 150NM of:

a. Ground Force Installation (active)? Yes/No (If yes, give name(s)) **Yes. FT Rucker**
b. Rail Access which allows the loading/unloading of heavy equipment? **Yes**
c. Deep water port facility? Yes/No (If yes, give name(s)) **Yes. Port of Mobile 56 mi; Port of Pensacola 3 mi., Port of New Orleans 176 mi., and NAS Pensacola Port Operations.**

Revision 1

Facilities (cont.)

E. Special Military Facilities

5. Does the installation medical treatment facility routinely receive referral patients? (Yes/No)

DENTAL: Yes. From BRDENCLINIC Whiting Field and Annex Dental Clinic Corry Station.
SEE BRANCH MED. CLINIC ATTACHMENT B A FOR ADDITIONAL DATA. CNATRA N6 5/18/94

6. Do installation medical facilities have any unique missions (aeromedical staging facility, environmental health laboratory, area dental laboratory, physiological training unit, wartime tasking, etc.)? Identify.

DENTAL: Yes. Both the Naval DENCEN command element and area dental laboratory are located at the NAS Pensacola BRDENCLINIC.
NAMI: Yes. Aerospace physiology training and hyperbaric chamber

ALSO SEE ATTACHMENT A & BRANCH MED. CLINIC ATTACHMENT B A CNATRA N6 5/18/94

7. List any weapons storage and handling facilities located at the installation.

HEARLD CNET N-4433 dtd 27 May

Type of Facility	Location	Mission and Capability of Facility
NAMI Physiological Training	Bldg 3845	Aerospace physiology training and hyperbaric chamber.
NAMI Clinical	1954	Aviation medical clinic
NAMI Academic	665	Aviation medicine training
1BTX1	MAG POINT	CADS/NAS WEAPONS
1BTX2	"	JATO/NAS WEAPONS
1BT3	"	SMALL ARMS AMMO/NAS WEAPONS
1ET4	"	DEMO (K-9 SCENT KIT)/NAS WEAPONS
2Y3A	"	UNSERVICEABLE AMMO/NAS WEAPONS
2Y3B	"	PYRO/NAS WEAPONS
2Y4A	"	ROCKET MOTORS AND CADS/NAS WEAPONS
2Y4B	"	EMPTY/NADEP
2Y5A	"	UNSERVICEABLE AMMO/NAS WEAPONS
2Y5B	"	CADS/NAS WEAPONS
5Y2	"	EMPTY (PYRO)/NADEP
5Y3	"	EMPTY (PYRO)/NADEP

Facilities (cont.)

E. Special Military Facilities

5. Does the installation medical treatment facility routinely receive referral patients? (Yes/No)

DENTAL: Yes. From BRDENCLINIC Whiting Field and Annex Dental Clinic Corry Station.

6. Do installation medical facilities have any unique missions (aeromedical staging facility, environmental health laboratory, area dental laboratory, physiological training unit, wartime tasking, etc.)? Identify.

DENTAL: Yes. Both the Naval DENCEN command element and area dental laboratory are located at the NAS Pensacola BRDENCLINIC.
NAMI: Yes. Aerospace physiology training and hyperbaric chamber

ALSO SEE ATTACHMENT A

7. List any weapons storage and handling facilities located at the installation.

Type of Facility	Location	Mission and Capability of Facility
NAMI Physiological Training	Bldg 3845	Aerospace physiology training and hyperbaric chamber.
NAMI Clinical	1954	Aviation medical clinic
NAMI Academic	665	Aviation medicine training
1BTX1	MAG POINT	CADS/NAS WEAPONS
1BTX2	"	JATO/NAS WEAPONS
1BT3	"	SMALL ARMS AMMO/NAS WEAPONS
1ET4	"	DEMO (K-9 SCENT KIT)/NAS WEAPONS
2Y3A	"	UNSERVICEABLE AMMO/NAS WEAPONS
2Y3B	"	PYRO/NAS WEAPONS
2Y4A	"	ROCKET MOTORS AND CADS/NAS WEAPONS
2Y4B	"	EMPTY/NADEP
2Y5A	"	UNSERVICEABLE AMMO/NAS WEAPONS
2Y5B	"	CADS/NAS WEAPONS
5Y2	"	EMPTY (PYRO)/NADEP
5Y3	"	EMPTY (PYRO)/NADEP

3YC1A	SHERMA N FIELD	CADS/PYRO/AIMD
3YC1B	"	CADS/NFDS
3YC2A	"	EMPTY/NAS WEAPONS
3YC2B	"	ROCKET MOTORS/NFDS
3YC3A	"	ROCKET MOTORS AND CADS/UNC
3YC3B	"	EMPTY/NAS WEAPONS
4YC1A	"	RIOT CONTROL AGENT & PYRO/NAS WEAPONS
4YC1B	"	CHEMICAL AND PYRO/NAS WEAPONS
4YC2A	"	PYRO/NAS WEAPONS
4YC2B	"	CHEMICAL AND PYRO/AOM
4YC3A	"	JATO AND IGNITERS/NAS WEAPONS
4YC3B	"	EMPTY/NAS WEAPONS
2Y1A	NASPCL A	PYRO/NAS WEAPONS
2Y1B4	"	PYRO/NAS WEAPONS
462	"	ARMORY

Facilities (cont.)

F. Facility Support Arrangements for Other Services

1. List all arrangements (e.g., inter-service support agreements) that involve supporting other military service activities at the installation.

Activity Name / Military Service	Description of Activity Role and Degree of Support
DEFPHOTOSCOL PNCLA/ASD (PA)	PROVIDE ADMINISTRATIVE, LOGISTICAL, AND BASE OPERATIONS SUPPORT BY ISA
JOAP-TSC PNCLA/DOD/NAVAIR	PROVIDE ADMINISTRATIVE, LOGISTICAL, AND BASE OPERATIONS SUPPORT BY ISA
313THTECHTRASQDN AIRTRNGCMD/U.S. AIR FORCE	PROVIDE FIRE PROTECTION AND BACHELOR OFFICERS QTRS BY ISA
16THSPECOPSWING (AFSOC) 16THOPSGRU/U.S. AIR FORCE	PROVIDE CONTROL TOWER SAFETY OBSERVER, ACCESS TO OLF CHOCTAW, AND CRASH RESCUE ASSETS BY ISA
3800 ABW/LG MAXWELL AFB/ U.S. AIR FORCE	PROVIDE NAVAL BRIG FACILITIES FOR SHORT-TERM CONFINEMENT OF USAF PRISONERS BY ISA
17TH TRAINING SQDN/ U.S. AIR FORCE	PROVIDE ADMINISTRATIVE, LOGISTICAL, AND BASE OPERATIONS SUPPORT BY ISA
PNCLADET 344THMILINTELBN 111THBRG/U.S. ARMY	PROVIDE STORAGE OF ORDNANCE (I.E., AMMUNITIONS, WEAPONS), FIRE PROTECTION, AND BACHELOR OFFICER QTRS BY ISA
USAIC FT BENNING FA FOR· 361CALBRDG/ 842ND SIGNALCO/U.S. ARMY	PROVIDE ADMINISTRATIVE, LOGISTICAL, AND BASE OPERATIONS SUPPORT UPON MOBILIZATION OF U.S. ARMY RESERVE UNITS BY ISA
USA AEROMEDICAL CTR FT RUCKER/U.S. ARMY	PROVIDE ADMINISTRATIVE, LOGISTICAL, AND BASE OPERATIONS SUPPORT BY ISA

2. List all formal support agreements and other arrangements that involve supporting other governmental agencies (federal, state, local or international) or civilian activities at the installation.

Activity / Sponsor / Government Affiliation	Description of Activity Role and Support Level
BARRANCAS NAT'L CEMETERY NASP/DEPT OF VETERAN AFFAIRS	PROVIDE ADMINISTRATIVE, LOGISTICAL, AND BASE OPERATIONS SUPPORT BY ISA

GULF ISLANDS NAT'L SEASHORE/NASP/ DEPT OF INTERIOR	PROVIDE ADMINISTRATIVE, LOGISTICAL, AND BASE OPERATIONS SUPPORT BY ISA
NAT'L WEATHER SVC/NASP	PROVIDE ADMINISTRATIVE, LOGISTICAL, AND BASE OPERATIONS SUPPORT BY ISA
FEDERAL AVIATION ADMINISTRATION/NASP	PROVIDE ADMINISTRATIVE, LOGISTICAL, AND BASE OPERATIONS SUPPORT BY ISA
AMERICAN RED CROSS/ NASP/CHARTER	PROVIDE ADMINISTRATIVE. LOGISTICAL, AND BASE OPERATIONS SUPPORT BY ISA
NAV-MARCOR RELIEF SOCIETY/NASP/CHARTER	PROVIDE ADMINISTRATIVE, LOGISTICAL, AND BASE OPERATIONS SUPPORT BY ISA
STATE OF FLA DEPT OF HRS(DIV OF BLIND)/NASP	PROVIDE ADMINISTRATIVE, LOGISTICAL, AND BASE OPERATIONS SUPPORT BY ISA
FIRST NAVY BANK/ NASP	PROVIDE ADMINISTRATIVE, LOGISTICAL, AND BASE OPERATIONS SUPPORT BY OUTGRANT LEASE
PEN AIR FEDERAL CREDIT UNION/NASP	PROVIDE ADMINISTRATIVE, LOGISTICAL, AND BASE OPERATIONS SUPPORT BY OUTGRANT LEASE
OMEGA TRAVEL AGENCY/ NASP	PROVIDE ADMINISTRATIVE, LOGISTICAL, AND BASE OPERATIONS SUPPORT BY CONTRACT
COMBINED FEDERAL CAMPAIGN/NASP/ SECNAVINST	PROVIDE ADMINISTRATIVE, LOGISTICAL, AND BASE OPERATIONS SUPPORT BY ISA
CONSUMER CREDIT COUNSELING OF WEST FLORIDA/NASP	PROVIDE ADMINISTRATIVE, LOGISTICAL, AND BASE OPERATIONS SUPPORT BY ISA
PENSACOLA JR COLLEGE/ NASP	PROVIDE ADMINISTRATIVE, LOGISTICAL, AND BASE OPERATIONS SUPPORT BY ISA
UNIVERSITY OF WEST FLORIDA/NASP	PROVIDE ADMINISTRATIVE, LOGISTICAL, AND BASE OPERATIONS SUPPORT BY ISA
ST JOHNS COUNTY SCHOOL BOARD/NASP	PROVIDE ADMINISTRATIVE, LOGISTICAL, AND BASE OPERATIONS SUPPORT BY ISA
EMBRY-RIDDLE AERONAUTICAL UNIV/NASP	PROVIDE ADMINISTRATIVE, LOGISTICAL, AND BASE OPERATIONS SUPPORT BY ISA
TROY STATE UNIVERSITY/ NASP	PROVIDE ADMINISTRATIVE, LOGISTICAL, AND BASE OPERATIONS SUPPORT BY ISA

UNIVERSITY OF ARIZONA/NASP	PROVIDE ADMINISTRATIVE, LOGISTICAL, AND BASE OPERATIONS SUPPORT BY CONTRACT
NAVAVNMUSEUM FOUNDATION/NASP	PROVIDE ADMINISTRATIVE, LOGISTICAL, AND BASE OPERATIONS SUPPORT BY ISA
SCHEDULED AIRLINES TICKET OFFICE/NASP	PROVIDE ADMINISTRATIVE, LOGISTICAL, AND BASE OPERATIONS SUPPORT BY CONTRACT
U.S. POST OFFICE/NASP/USPS	PROVIDE ADMINISTRATIVE, LOGISTICAL, AND BASE OPERATIONS SUPPORT BY CHARTER/LEASE
NAT'L SECURITY AGENCY/ CSS TECHREP/NASP	PROVIDE FIRE PROTECTION ONLY BY ISA
NORTHWEST FLA SAFETY COUNCIL/NASP	PROVIDE CLASSROOM SPACE AND A DESIGNATED OUTSIDE AREA FOR MOTORCYCLE DRIVER TRAINING AT NO COST TO THE U.S. NAVY BY ISA
ESCAMBIA COUNTY, PENSACOLA, FLORIDA/NASP	PROVIDE FIRE FIGHTING SUPPORT THROUGH MUTUAL AID AGREEMENTS, WITHIN CAPABILITIES
CITY OF PENSACOLA, FLORIDA/NASP	PROVIDE FIRE FIGHTING SUPPORT THROUGH MUTUAL AID AGREEMENTS, WITHIN CAPABILITIES
DEFPRINTSVCSA/DOD	PROVIDE ADMINISTRATIVE, LOGISTICAL, AND BASE OPERATIONS SUPPORT BY ISA
DEFPRINTSVCDETOFF PNCLA/DOD	PROVIDE ADMINISTRATIVE, LOGISTICAL, AND BASE OPERATIONS SUPPORT BY ISA
DEFENSE DISTRIBUTION DEPOT PENSACOLA/ DDRE/DLA	PROVIDE ADMINISTRATIVE, LOGISTICAL, AND BASE OPERATIONS SUPPORT BY ISA
DAO-CL PNCLA/DFAS	PROVIDE ADMINISTRATIVE, LOGISTICAL, AND BASE OPERATIONS SUPPORT BY ISA
DRMO PNCLA/DLA	PROVIDE ADMINISTRATIVE, LOGISTICAL, AND BASE OPERATIONS SUPPORT BY ISA
DISTOPNCLAPNCLA/DFAS	PROVIDE FIRE PROTECTION AND BACHELOR QTRS SUPPORT BY ISA
FEDERAL PRISON CAMP/ DEPARTMENT OF JUSTICE	PROVIDE FIRE PROTECTION ONLY BY ISA
USCG LIAISON OFFICER PNCLA/ U.S. COAST GUARD/DOT	PROVIDE ADMINISTRATIVE, LOGISTICAL, AND BASE OPERATIONS SUPPORT BY ISA

USCG ANT PNCLA/ U.S. COAST GUARD/DOT	PROVIDE ADMINISTRATIVE, LOGISTICAL, AND BASE OPERATIONS SUPPORT BY ISA
USCG CUTTER POINT LOBOS/ U.S. COAST GUARD/DOT	PROVIDE ADMINISTRATIVE, LOGISTICAL, AND BASE OPERATIONS SUPPORT BY ISA
DEFENSE INVESTIGATIVE SERVICE/DOD	PROVIDE ADMINISTRATIVE, LOGISTICAL, AND BASE OPERATIONS SUPPORT BY ISA
COMMISSARY STORE/DEFENSE COMMISSARY AGENCY/DLA	PROVIDE ADMINISTRATIVE, LOGISTICAL, AND BASE OPERATIONS SUPPORT BY ISA
CIVILIAN RETIRED AFFAIRS OFFICE/HRO/NASP	PROVIDE ADMINISTRATIVE, LOGISTICAL, AND BASE OPERATIONS SUPPORT BY ISA
MCDONALD'S RESTAURANT/ NASP/DON	PROVIDE ADMINISTRATIVE, LOGISTICAL, AND BASE OPERATIONS SUPPORT BY DON CONTRACT
U.S. CUSTOMS JACKSONVILLE/ BUREAU OF TOBACCO AND FIREARMS	PROVIDE CALIBRATION OF PRECISION INSTRUMENTS AND SPECIAL SERVICES BY ISA AS REQUIRED
PRIVATE INDUSTRY OF ESCAMBIA COUNT, INC./ NASP/STATE OF FLORIDA (HRS)	PROVIDE ADMINISTRATIVE, LOGISTICAL, AND BASE OPERATIONS SUPPORT BY ISA AND LEASE
TWENTY-THREE (23) PRIVATE CONTRACTORS	PROVIDE ADMINISTRATIVE, LOGISTICAL, AND BASE OPERATIONS SUPPORT BY CONTRACT

Facilities (cont.)

G. Proximity to Operational Mission Areas

1. Does the location of the installation have any strategic role at the present time or in future plans (include both location and attributes available at that location, e.g., waterfront space). Discuss alternate military/civilian facilities that could fulfill the same strategic role.

Five nautical miles from piers to sea buoy and Gulf of Mexico.

Short, safe navigation detail.

Near Ingleside Shipyard, Pascagoula, Mississippi; and New Orleans, Lousisiana.

Five hundred nautical miles to Key West, Florida.

Approximately 3,000 feet of pier space.

H. Proximity to Training Areas

1. Does the location of the installation permit any specialized training with other operational units (e.g., Joint forces)? If so, provide details.

HLT: Yes. USA - FT Polk, LA; FT Benning, GA; Hunter AAF, Savanah, GA; FT Rucker, AL; USAF - Hurlburt Field, FL; USCG - ATC Mobile, AL
AIR OPS: Yes. NAS Pensacola is centrally located on the Gulf of Mexico, near several large military installations, including 2 tacts ranges. This location permits virtually all types of specialized training capabilities.

2. Describe the plan for conducting carrier qualifications. Will ship deploy to training squadron site or will squadrons deploy?

AIR OPS: Helicopter Landing Trainer qualifications are conducted at NAS Pensacola by H-57's from NAS Whiting Field. Currently no training carrier assigned to NAS Pensacola although CQ plan is current. Airspace/Op-areas are available for carrier to operate within and will have no negative impact on current training. Currently squadrons have to deploy to receive CQ training.

3. How far (nmi.) is the installation from a designated naval operations area where an aircraft carrier would conceivably operate?

30 nmi. when operating out of Pensacola. 566 nmi. to Key West. 300 nmi. to Cecil Field.

H. Proximity to Training Areas

4. If the aircraft carrier deploys to an area within operating range of training air squadrons, would CQ training usually be conducted directly from the installation or on a detachment basis?

Directly from NAS Pensacola is the most efficient and cost effective way to conduct CQ.

Revision 1

Facilities (cont.)

I. Proximity to Other Support Facilities

1. List other airfields (currently not used for undergraduate pilot and/or NFO/Navigator training) in the local flying area that are available for training and emergency uses.

SEE BRANCH MED. CLINIC ATTACHMENT B FOR ADDITIONAL INFORMATION. CNATRA N6 5/18/94

Airfield Name	Major Use / Capability	Location / Distance
OLF CHOCTAW	PRACTICE DEMONSTRATION	NW FLORIDA / 30 MILES
PENSACOLA REGIONAL	DIVERT // APPROACH	PENSACOLA, FL/ 10 MILES
HURLBERT AFB	" // "	FT. WALTON, FL/ 32 MILES
EGLIN AFB	" // "	FT. WALTON, FL / 41 MILES
MOBILE DOWNTOWN	" // "	MOBILE, AL / 43 MILES
MOBILE REGIONAL	" // "	MOBILE, AL / 53 MILES
KEESLER AFB	" // "	BILOXI, MS / 83 MILES
TYNDALL AFB	" // "	PANAMA CITY, FL / 92 MILES
GULFPORT/BILOXI	" // "	GULFPORT, MS / 93 MILES

2. What other military facilities located in the vicinity are/could be used to support the installation's and tenants' mission?

SEE BRANCH MED. CLINIC, AND NAMRL ATTACHMENTS (ATTACH B) FOR ADDITIONAL DATA. CNATRA N6 5/18/94

Military Facility Name	Actual / Proposed Use	Distance
NETPMSA (Saufley Field)	Training Administration	11 miles
NTTC Corry Station	Technical Training	5 miles
NAS Whiting Field	Flight Training	27 miles
FT Rucker, Alabama Aeromedical Research Lab	Life Science Research	300 miles

HEARD CNET N-4433 27 May 94

Facilities (cont.)

I. Proximity to Other Support Facilities

1. List other airfields (currently not used for undergraduate pilot and/or NFO/Navigator training) in the local flying area that are available for training and emergency uses.

Airfield Name	Major Use / Capability	Location / Distance
OLF CHOCTAW	PRACTICE DEMONSTRATION	NW FLORIDA / 30 MILES
PENSACOLA REGIONAL	DIVERT // APPROACH	PENSACOLA, FL/ 10 MILES
HURLBERT AFB	" // "	FT. WALTON, FL/ 32 MILES
EGLIN AFB	" // "	FT. WALTON, FL / 41 MILES
MOBILE DOWNTOWN	" // "	MOBILE, AL / 43 MILES
MOBILE REGIONAL	" // "	MOBILE, AL / 53 MILES
KEESLER AFB	" // "	BILOXI, MS / 83 MILES
TYNDALL AFB	" // "	PANAMA CITY, FL / 92 MILES
GULFPORT/BILOXI	" // "	GULFPORT, MS / 93 MILES

2. What other military facilities located in the vicinity are/could be used to support the installation's and tenants' mission?

Military Facility Name	Actual / Proposed Use	Distance
NETPMSA (Saufley Field)	Training Administration	11 miles
NTTC Corry Station	Technical Training	5 miles
NAS Whiting Field	Flight Training	27 miles
FT Rucker, Alabama Aeromedical Research Lab	Life Science Research	300 miles

NAVLANTMETOCDET Whiting Field	In the event of catastrophic loss of equipment and facilities at Pensacola. Services would be considerably less than that of NLMOD Pensaacola.	30 nmi.
Annex Dental Clinic Corry Station	Dental Services - Corry	5 mi.
Branch Dental Clinic Whiting Field	Dental Services - Whiting	40 mi.
NTCC Corry Station	NTC	3 mi.
Saufley Field	Navy Activities/Federal Prison	8 mi.
NTTC Corry Station	AITC - Instructor Training	3 mi.
OLF Choctaw (Eglin AFB)	Field Survival Training	40 mi.

3. What civilian owned facilities located in the vicinity are/could be used to support the installation's and tenants' mission?

Facility Name	Actual / Proposed Use	Distance

NOTE: No tenant at this installation could provide input for Question 3. Question will be submitted to the local Chamber of Commerce for consideration. NAS Pensacola's vastness with over 60 tenants make any civilian owned facility option infeasible.

Revision 1

Facilities (cont.)

J. Unique features

1. Identify any unique (one of a kind) features (function, equipment, ranges, etc.) possessed by this training installation. Please list each feature separately and provide a narrative explanation of the importance of the unique feature. (Do not include Depots, Product Centers or Laboratories)

SEE PAGE 56-a CNATRA N6 5/18/94 JK

2. Are there any on-installation facilities unique (one-of-a-kind) to your service that must be replaced if the installation is closed (Yes/No). If so, list the following information:

a. Name or type of facility

b. Total SF SEE PAGE 56-b CNATRA N6 5/18/94 JK

c. Cat code

d. Present use

~~ANSWER TO QUESTIONS J.1, J.2 PROVIDED ASAP~~ will be CNATRA N3

Revision 1

FACILITIES

J. Unique features

Question 1.

DEEP-WATER, WARM-WATER PORT FACILITY IN COMBINATION WITH A MULTI-FUNCTIONAL AIRFIELD are a significant strategic feature for the Gulf Coast. Vessels have easy access to the Gulf of Mexico. Full port services are available for virtually all U.S. Navy vessels. Port location, ease of access, and airfield capability allow for major operations to be conducted with this installation as the staging point. WEATHER at the installation's location provides year-round flying and at-sea operations with minimal disruption of training.

HOME TO THE NAVY'S OFFICER CANDIDATE SCHOOL. Consolidation this year of OCS and AOCS makes the installation a vital source of commissioned naval officers. This, combined with the BRAC 93 decision to relocate the majority of enlisted aviation training to NAS Pensacola, focuses attention on the installation as the cornerstone for the Navy's training efforts

HELICOPTER LANDING TRAINER: This one of a kind vessel, mentioned throughout this and past data calls would have to be relocated. It provides service to all DOD, DOT, and other government agencies. Its current Gulf Coast location is central to Army/ Air Force operating forces and vital to the safe at-sea landing qualifications for any helicopter pilot.

HISTORIC PARKS: BARRANCAS NATIONAL CEMETERY, FORT BARRANCAS, and ADVANCE REDOUBT are all national treasures that benefit from their location on an active military installation.

NATIONAL MUSEUM OF NAVAL AVIATION: The largest collection of historic naval aircraft under one roof in the country. Support of the museum and the above would have to be seriously considered and addressed in any BRAC action affecting the installation.

Revision 1

QUESTION 2.

a. Name or type of facility: Helicopter blade whirl tower test facility. Not only unique to the Navy, but unique to the armed services. Would require dismantling, movement, reassembly if this installation where closed. Would be unavailable to the armed services for blade test during this process.
b. Total SF - 5,000
c. Cat code - 211-84
d. Present use: Helicopter Main Rotor Blade Test and Evaluation, and repair.

a. U.S. Coast Guard Station and berth for U.S.C.G. cutter.
b. Total SF - 10,636
c. Cat code - 159-64
d. Present use: While not unique to the Navy directly, it is a unique tenant with an exceedingly important mission that could not be eliminated from this portion of the gulf coast.

a. Joint USN/USAF Water Survival Training.
b. Total SF - 24,068
c. Cat code - 171-20
d. Present Use: Again, not unique to the Navy or just a facility, but a still-developing joint service training unit that involves numerous unique resources with a very limited but vastly important mission that could not be duplicated without the complete moving of all resources.

a. Joint Oil Analysis Program Technical Support Center
b. 3,450 square feet
c. N/A
d. The building is equipped with mission unique equipment: emission spectrometers, X-ray fluorescence spectrometers, Fourier transform infrared spectrophotometers, particle size analyzers and ferrographs, and computer equipment to support the certification, correlation and RDT&E. In addition to the RDT&E functions, a Navy oil analysis laboratory is located in this building which coordinates efforts with the JOAP-TSC and also provides oil analysis service to the Pensacola area activities.

The Joint Oil Analysis Program Technical Support Center (JOAP-TSC) is a tri-service organization chartered by the Joint Logistic Commanders. This facility has been located aboard Naval Air Station Pensacola since its charter in 1978. This center supports all services and allied countries in analysis of oils from fluid wetted systems, conducts programs for certification of laboratories, conducts a program for interservice laboratory correlation and performs research and development in the area of condition monitoring of fluid lubricating systems. Proper use of the oil analysis programs in the services is documented as saving millions of dollars by removing equipment from service prior to failure. In addition to monetary savings, safety of flight is affected by the ability to perform properly the analyses required. Relocation of this facility would require relocating numerous pieces of test equipment which will require special handling, and a facility at the receiving site which is approved to accept laboratory operations and hazardous waste handling facilities.

Facilities (cont.)

J. Unique features

1. Identify any unique (one of a kind) features (function, equipment, ranges, etc.) possessed by this training installation. Please list each feature separately and provide a narrative explanation of the importance of the unique feature. (Do not include Depots, Product Centers or Laboratories)

2. Are there any on-installation facilities unique (one-of-a-kind) to your service that must be replaced if the installation is closed (Yes/No). If so, list the following information:

a. Name or type of facility

b. Total SF

c. Cat code

d. Present use

ANSWER TO QUESTIONS J.1, J.2 will be PROVIDED ASAP

CNATRAIN3

Future Requirements

A. Air Quality

1. What is the name of the Air Quality Management District in which the base is located? **No**

a. Is the installation or any of its OLFs or Staging Bases located in different Air Quality Management Districts? **No**

b. If the answer is yes, provide acres of installation at each location, and answer questions 2-4 for each Air Quality Management District location. **N/A**

2. Has EPA designated the air quality control area in which your installation is located as a maintenance or non-attainment area for any of the six criteria air pollutants (ozone, carbon monoxide, particulate matter (PM 10), sulfur dioxide, nitrogen dioxide, lead)? **No**

a. If the base is in a maintenance area, identify the regulated pollutant(s). **N/A**

b. If the base is in a non-attainment area, identify the pollutant(s) and the degree of severity (marginal, moderate, serious, severe, or extreme). **N/A**

3. Are there any critical air quality regions (i.e., non-attainment areas, national parks, etc.) within 100 kilometers of the base? **No (per State of Florida Northwest Air District)**

4. Has the local Air Quality Board (or similar organization) restricted or delayed any on- or off-installation activities due to air quality considerations? Examples to consider include restrictions to construction permits, restrictions to operating hours for industrial facilities, implementation of High Occupancy Vehicle (HOV) procedures during rush hour, etc. **No**

a. If activities have been restricted, describe the nature, extent and duration of the restriction. **N/A**

b. Has the installation been required to implement emissions reduction through special actions, such as carpooling or emissions credit transfer? **No**

c. If special actions have been implemented, specify the nature of the actions. **N/A**

5. Are there any critical air quality regions (i.e. non-attainment areas, national parks, etc.) within 100 kilometers of the installation?

No (per State of Florida Northwest Air District) Gulf Shore National Park not considered a critical air quality region.

Future Requirements (cont.)

B. Encroachment

1. Are there any known plans for a commercial airline to hub at an airport within 100 nmi. of your installation? If so, describe.

No. ~~**Not in the sense of Atlanta or Denver, Pensacola Regional has and is expecting to see a substantial increase in commercial operations. (As per Mr. Chuck Porter, Asst. Airport Manager, Pensacola Regional Airport, 435-1746).**~~ 2 CALTRANS

2. Have there been any ATC delays (15 minutes or greater) between initial takeoff request and actual take-off during the past three years as a result of civilian traffic? If so, please complete the following table.

Fiscal Year	Average Delay (minutes)	Number of Delays	% of Total Flight Operations Affected
1991		None	
1992		None	
1993		None	

3. How many times during each of the past three years have any of your low level training routes been modified to accommodate construction and/or noise complaints?

Fiscal Year	Number of changes
1991	None
1992	None
1993	2

Future Requirements (cont.)

B. Encroachment (cont)

4. Is the existing AICUZ study encoded in local zoning ordnances?

Yes. Local government has implemented the draft AICUZ requirements well in advance of its approval indicating positive local support.

a. Attach a copy of any applicable sections of the installation AICUZ plan and note any recent modifications.

NAS Pensacola does not have an approved AICUZ plan. ~~NAVFAC is reviewing AICUZ and is waiting on additional information concerning the T-44 Aircraft (which is replacing the T-2 Aircraft) prior to completion of the updated AICUZ. Expected completion of the updated AICUZ should occur by December 1994. Not much change is expected in the updated AICUZ. See the attached AICUZ drawing~~.

CNATRA43

b. Provide a description of local zoning ordinances and their impact on future encroachment, restricted flight hours and details of any litigation history.

Local ordinance is in accord with the AICUZ restrications. See attached Urban Area Land Use Regulation, Escambia County, FL Ordinace 89-27. The AICUZ program has had only one noise complaint that was filed in US Claims Court (393-88L) by Levy, H. and Joy E. Blue in 1988. No other action was taken and was apparently dropped.

5. Do current estimates of population growth and development or environmental constraints pose problems for existing or planned mission?

ESA: There are no environmental constraints to pose problems for existing or planned mission.
FMD: No

6. Provide a copy of the current and proposed land development plans for the area surrounding the installation (i.e., the local government's comprehensive land-use plan).

See attached Urban Area Land Use Regulations, Escambia County, Florida, Ordinance No. 89-27.

1991 renovation to pier 303n provides 42 feet of water with all necessary hotel services. Harbor and 2,000 feet turning basin dredged to 42 feet. All three piers (302, 303E, and 303N) have easy access to intercoastal waterway and is only 3 nautical miles to Gulf of Mexico. All necessary facilities are available to support other agencies who may desire to conduct weapons testing, underwater research, or exercises in Gulf of Mexico. Protected basin adjacent to seawall could easily accomodate small craft, such as LCM-8's from a reserve assualt boat unit with only two to five feet of dredging. Twenty-seven convenient anchorages are available with easy access to fleet landing.

Future Requirements (cont.)

B. Encroachment (cont)

7. Air Space Encroachment.

a. Do you receive noise complaints from off-installation residents? **Yes**

b. How many per month (average)? Include noise complaints from local and transient aircraft within the airfield traffic pattern and departure and arrival corridors. **5**

c. Has the installation implemented noise abatement procedures? **Yes**

d. Describe your procedures. Include noise abatement procedures for maintenance, flight operations, arrivals, departures, and command-directed. **Airfield restricts jet traffic from flying over densely populated areas (jets remain south of parallel runways and east of the north south runway). Airfield traffic pattern restricts aircraft from overflying housing areas. Evening and weekend hours are carefully monitored.**

8. Air Installation Compatible Use Zone (AICUZ) and Terminal Area Procedures. Answer as well as possible if civilian control or FAR PART 150 Study applies. Answer the following questions regarding current community and other land encroachment near or at the installation by filling in the attached tables following the instructions below. **Refer to answers in Question 9 and Attachments Land Use Charts.**

ATTACHMENT 1

a. Instructions:

(1) Provide the percent off base current incompatible land use within the Clear Zone (CZ), Accident Potential Zone I (APZ I), Accident Potential Zone II (APZ II), and each noise contour interval (i.e. 60-65 Ldn if available, 65-75 Ldn, 75-80 Ldn if available, and greater than 80 Ldn if available) in the attached tabular format, along with the indicated support information. Incompatibility is governed by DODI 4165.57 and is detailed in the 1980 report of the Federal Interagency Committee on Urban Noise.

(2) Obtain current land use data by overlaying noise contours and CZ/APZ from the most recent publicly released AICUZ, Environmental Assessment which has Finding of No Significant Impact, Environmental Impact Statement which has a Record of Decision, or other officially released noise contour analysis onto current land use maps obtained from local governments. Include the source and date of data. If no current land use maps are available, bases may use recent aerial photography of the off-base areas to determine compatibility percentages. Aerial photos may be available from local governments, USDA offices or planning agencies. Another alternative is to obtain a USGS or map of the environs, and determine land uses through a windshield survey. Analysis of tax/parcel or similar maps may also be conducted.

(3) Then determine the percent incompatible land use. This work is now typically done with computer digitizing programs and equipment. However, the work can be done manually, with the help of the drafting section, through the use of a template or other means. Visit local government planning offices for assistance with off-base land use.

Future Requirements (cont.)

B. Encroachment (cont)

(4) For consistency, use generalized land use areas in determining incompatible land uses (i.e. for residential land uses, include residences, lawns, sidewalks, driveways, local streets, etc., NOT JUST THE RESIDENCES). Generalized land use is the traditional nationwide planning convention and is the standard used in the typical land use maps provided by local governments. For each farm house or rural residence in Accident Potential Zone (APZ) I, add 1/2 acre of incompatible land use.

(5) What is the percent current off-base incompatible land use:
- (a) Within the Clear Zone (CZ) at each end of each active runway?
- (b) Within Accident Potential Zone (APZ) I at each end of each active runway?
- (c) Within APZ II at each end of each active runway?
- (d) Between the 60 Ldn and 65 Ldn noise contours (if available)?
- (e) Between the 65 Ldn and 75 Ldn noise contours?
- (f) Between the 75 Ldn and 80 Ldn noise contours (if available)?
- (g) Within the 80 Ldn noise contour and above (if available)?

9. Current land use status for accident zones: reference questions 8.a.(5)(a) through 8.a.(5)(c). Describe current off-base encroachment/incompatible land use by completing the information in the following table for clear zones and accident potential zones.

Zones	Rnwy No.	Est Pop	Acres	% Incomp L-U
CZ	1	0	130	0%
APZ I	1	0	345	0%
APZ II	1	0	482	0%
Primary				

Zones	Rnwy No.	Est Pop	Acres	% Incomp L-U
CZ	7	0	180	0%
APZ I	7	0	345	55%
APZ II	7	180	440	100%
Primary				

Future Requirements (cont.)

B. Encroachment (cont)

Zones	Rnwy No.	Est Pop	Acres	% Incomp L-U
CZ	19	50	130	0%
APZ I	19	600	345	100%
APZ II	19	250	482	100%
Primary				

Zones	Rnwy No.	Est Pop	Acres	% Incomp L-U
CZ	25	0	180	0%
APZ I	25	0	345	0%
APZ II	25	0	440	0%
Secondary				

10. Current land use status for noise zones: reference questions 8.a.(5)(d) through 8.a.(5)(g). Describe current off-base encroachment/incompatible land use by filling in the information in the following table for noise zones/contour intervals.

DNL	Est Pop	Acres	% Incomp L-U
60-65*	N/A	N/A	N/A
65-75	900	5,575	9
75-80*	N/A	N/A	N/A
80+*	N/A	N/A	N/A

*** If available**

Future Requirements (cont.)

B. Encroachment (cont)

11. Future local/regional community encroachment. Answer the following questions regarding future community and other land encroachment near or at the installation.

a. Provide a rough estimate of how previous BRAC or operational realignments will impact your AICUZ footprint (i.e., what types and quantities of aircraft and operations tempo increases are expected from incoming units, and what is their predicted effect on your footprints)?

Previous BRAC has not impacted the AICUZ footprint and presently there are no operational realignments planned that will affect the AICUZ footprint.

b. How are local land use plans expected to impact the AICUZ footprints?

Local (Escambia County) Land Use Plans and Zoning Plans reinforce and are in accord with the AICUZ requirements and restrictions.

c. If the latest publicly released AICUZ is outdated (does not reflect current flying operations), provide milestones for completion of an updated AICUZ.

NAVFAC is reviewing AICUZ. ~~and is waiting on additional information concerning the T-45 Aircraft (which is replacing the T-2 Aircraft) prior to completion of the updated AICUZ. Expected completion of the updated AICUZ should occur by December 1994. Not much change is expected in the updated AICUZ.~~ Expect completion July 94

2
CNATRANS

d. Describe how local governments (municipalities, counties) have incorporated AICUZ recommendations into land use controls (zoning, etc.) by indicating which local governments, if any, have incorporated any of the following into their land use controls. Be sure to specify which types of controls: zoning, building codes, subdivision regulations, etc. Indicate if any new local land use control efforts are to be implemented, when implemented, what jurisdiction, and what type of controls, as well as how encroachment will be limited.

(1) AICUZ recommended height restrictions.
(2) AICUZ recommended development limits for Accident Potential Zone (APZ) I.
(3) AICUZ recommended development limits for APZ II
(4) AICUZ recommended development limits between the 60 Ldn and 65 Ldn noise contours (if available).
(5) AICUZ recommended development limits between the 65 Ldn and 75 Ldn noise contours.
(6) AICUZ recommended development limits between the 75 Ldn and 80 Ldn noise contours (if available).
(7) AICUZ recommended development limits above the 80 Ldn noise contour (if available).
(8) Are real estate disclosure statements required by local communities? ✓

SEE ZONING ATTACHMENT CNATRANS

Future Requirements (cont.)

B. Encroachment (cont)

11. Future local/regional community encroachment (cont.)

e. Indicate if significant development (i.e. a residential subdivision, shopping mall or center, industrial park, etc.) exists or is anticipated or has been announced or started. If so, indicate what type of land use (residential, commercial, industrial, etc.), the type and size of the development (for residential subdivision: number of housing units, number of acres, population; for shopping mall/center: number of stores, total number of acres), when completed or when completion expected. Indicate any long range (20 years) trends for new growth.

A developer has made a proposal to develop a golf course and low density residential community located West of NAS Pensacola within the AICUZ footprint. This development is planned in accordance with the AICUZ requirements and restrictions. Currently this development is being reviewed by OPNAV N44.

f. Has all clear zone acquisition been completed? **Yes, all clear zone aquisitions have been completed.**

(1) If not, indicate the runway approach and number of acres to be acquired, as well as timetable and expected acquisition costs.

g. Are on-base facilities and proposed facility development sited in accordance with AICUZ recommendations? Refer to the Base Comprehensive or Master Plan. For each incompatible facility (existing or proposed), indicate facility type (dormitory, etc.), approximate number of occupants, why the facility is incompatible, the reason this incompatibility is necessary, and the anticipated completion date if projected or under construction.

Currently there are no on-base facilities within the clear zone and APZ I. However,NAS Pensacola has a number of facilities located within APZ II. The majority of these facilities were constructed prior to the development and implementation of AICUZ. These facilities when evaluated as to relocation due to being sited within APZ II prove to be economically infeasible verses the low risk of accidental potential in APZ II.

Future Requirements (cont.)

C. Ability for Expansion

1. Does the operational infrastructure (e.g., parking apron, fuel and munitions storage, warehouse space, hangar space) provide capabilities for future expansion or change in mission?

FUEL: Yes. New fuel farm under construction has storage capacity of 3,948,000 gallons.
WAREHOUSE SPACE: Yes. Storage space at Bldg 3581 and 781 can accomodate any number of aircraft that air ops can support.
AIR OPS: Yes, but dependent upon waivers, financial constraints, and impact on local community (noise complaints).

2. What is the availability of off-installation acreage for possible future installation development?

There is land available adjacent to NAS Pensacola that can be purchased for future installation development and Bronson Field.

3. Provide the following information for installation infrastructure related facilities and functions. If these or other installation infrastructure attributes may be a determining factor for installation loading and expansion, provide additional comments and capacity measures as appropriate. SEE PAGE 65a

Type of Facility or Capability	On Installation Capacity	Off Installation Long Term Contract	Normal Steady State Load	Peak Demand
Electricity (KWH)	50,000	50,000	25,000	32,000
Water (GPD)	10,000,000	N/A	4,000,000	8,000,000
Sewage (GPD)	3,500,000	N/A	1,500,000	2,500,000
Natural Gas (CFH)	*500,000 **	*N/A*	*81,700*	*192,900*
Short Term Parking	*13,500*	*N/A*	*10,000*	*12,000*
High Temp.Water/ Steam Generation/ Distribution	325,000#/HR	N/A	25,000#/HR	120,000#/HR

** Using our main which is a 10 inch pipe, 60 PSIG supply pressure, and a 10 PSIG drop, a conservative estimate under present conditions would be 500,000 CFH.*

CNATRA N61 7/8/94

4. Are there any characteristics regarding your utility systems that should be considered?

ESA: There are no environmental characteristics to be considered.
PWC: The steam system is being down-sized due to reduced steam demand. In FY95 two 125,000#/HR boilers will be taken out of service, and 4 satellite boilers systems will be operating with a total capacity of 80,000#/HR. The large boilers could be returned to service but the distribution system could require extensive repair.

Revised page

Future Requirements (cont.)

C. Ability for Expansion

1. Does the operational infrastructure (e.g., parking apron, fuel and munitions storage, warehouse space, hangar space) provide capabilities for future expansion or change in mission?

FUEL: Yes. New fuel farm under construction has storage capacity of 3,948,000 gallons.
WAREHOUSE SPACE: Yes. Storage space at Bldg 3581 and 781 can accomodate any number of aircraft that air ops can support.
AIR OPS: Yes, but dependent upon waivers, financial constraints, and impact on local community (noise complaints).

2. What is the availability of off-installation acreage for possible future installation development?

There is land available adjacent to NAS Pensacola that can be purchased for future installation development and Bronson Field.

3. Provide the following information for installation infrastructure related facilities and functions. If these or other installation infrastructure attributes may be a determining factor for installation loading and expansion, provide additional comments and capacity measures as appropriate.

Type of Facility or Capability	On Installation Capacity	Off Installation Long Term Contract	Normal Steady State Load	Peak Demand
Electricity (KWH)	50,000	50,000	25,000	32,000
Water (GPD)	10,000,000	N/A	4,000,000	8,000,000
Sewage (GPD)	3,500,000	N/A	1,500,000	2,500,000
Natural Gas (CFH)	*500,000 **	*N/A*	*81,700*	*192,900*
Short Term Parking	*13,500*	*N/A*	*10,000*	*12,000*
High Temp.Water/ Steam Generation/ Distribution	325,000#/HR	N/A	25,000#/HR	120,000#/HR

** Using our main, which is a 10 inch pipe, 60 PSIG supply pressure, and a 10 PSIG drop, a conservative estimate under present conditions would be 500,000 CFH.*

4. Are there any characteristics regarding your utility systems that should be considered?

ESA: There are no environmental characteristics to be considered.
PWC: The steam system is being down-sized due to reduced steam demand. In FY95 two 125,000#/HR boilers will be taken out of service, and 4 satellite boilers systems will be operating with a total capacity of 80,000#/HR. The large boilers could be returned to service but the distribution system could require extensive repair.

Revised pg

UIC: 00204

DATA CALL 20

Future Requirements

C. Ability for Expansion

3. Provide the following information for installation infrastructure related facilities and functions. If these or other installation infrastructure attributes may be a determining factor for installation loading and expansion, provide additional comments and capacity measures as appropriate.

Type of Facility or Capability	On Installation Capacity	Off Installation Long Term Contract	Normal Steady State Load	Peak Demand
Electricity (KWH)	50,000	50,000	25,000	32,000
Water (GPD)	10,000,000	N/A [1]	4,000,000	8,000,000
Sewage (GPD)	3,500,000	N/A [1]	1,500,000	2,500,000
Natural Gas (CFH)	*500,000 **	*N/A [2]*	*81,700*	*192,900*
Short Term Parking	*13,500*	*N/A [3]*	*10,000*	*12,000*
High Temp.Water/ Steam Generation/ Distribution	325,000#/HR	*N/A [4]*	25,000#/HR	120,000#/HR

** Using our main which is a 10 inch pipe, 60 PSIG supply pressure, and a 10 PSIG drop, a conservative estimate under present conditions would be 500,000 CFH.*

[1] N/A (Water and Sewage): Currently no capability (and no requirement) for "Off-Base Long Term Contracts." Utilities available in the community; however, would require construction of increased capacity in order to serve NASP.

[2] N/A (Natural Gas): Navy owns pipeline transportation of 5,000 decatherms/day or approx 208,000 CFH of uninterruptiple supply. Additionally, Navy has access to another 5,000 decatherms/day (uninterruptiple) owned by an Air Force Base in Louisiana and maintains 15,000 decatherms in storage. Under present contract, Navy requirements which exceed these quantities would be provided, but subject to interruption.

[3] N/A (Short Term Parking): There exists an unquantified capability for off-installation "Short Term Parking" (in the form of parking lots at nearby active and defunct shopping centers, etc.). Because there is no requirement, no long term contract has been explored.

[4] N/A (High Temp Water/Steam Generation/Distribution): No existing off-installation contract capability for these utilities.

Future Requirements (cont.)

C. Ability for Expansion

1. Does the operational infrastructure (e.g., parking apron, fuel and munitions storage, warehouse space, hangar space) provide capabilities for future expansion or change in mission?

FUEL: Yes. New fuel farm under construction has storage capacity of 3,948,000 gallons.
WAREHOUSE SPACE: Yes. Storage space at Bldg 3581 and 781 can accomodate any number of aircraft that air ops can support.
AIR OPS: Yes, but dependent upon waivers, financial constraints, and impact on local community (noise complaints).

2. What is the availability of off-installation acreage for possible future installation development?

There is land available adjacent to NAS Pensacola that can be purchased for future installation development and Bronson Field.

3. Provide the following information for installation infrastructure related facilities and functions. If these or other installation infrastructure attributes may be a determining factor for installation loading and expansion, provide additional comments and capacity measures as appropriate.

Type of Facility or Capability	On Installation Capacity	Off Installation Long Term Contract	Normal Steady State Load	Peak Demand
Electricity (KWH)	50,000	50,000	25,000	32,000
Water (GPD)	10,000,000	N/A	4,000,000	8,000,000
Sewage (GPD)	3,500,000	N/A	1,500,000	2,500,000
Natural Gas (CFH)	323,000	149,400	101,000	182,000
Short Term Parking	13,500	N/A	11,000	45,000
High Temp.Water/ Steam Generation/ Distribution	325,000#/HR	N/A	25,000#/HR	120,000#/HR

4. Are there any characteristics regarding your utility systems that should be considered?

ESA: There are no environmental characteristics to be considered.
PWC: The steam system is being down-sized due to reduced steam demand. In FY95 two 125,000#/HR boilers will be taken out of service, and 4 satellite boilers systems will be operating with a total capacity of 80,000#/HR. The large boilers could be returned to service but the distribution system could require extensive repair.

Future Requirements (cont.)

C. Ability for Expansion (cont.)

5. Identify in the table below the real estate which has the potential to facilitate future development and for which you are the plant account holder. Complete a separate table for each individual site, i.e., main installation, outlying airfields, special off-site areas, off installation housing, etc. Unit of measure is acres.

Site Location: NAS PENSACOLA (INCLUDES CORRY MALL)

Land Use	Total Acres	Developed	Available for Development	
			Restricted	Unrestricted
Operational	2,500	1,980	200	320
Training	350	275	20	55
Research & Development	25	8	5	12
Supply and Storage	230	117	30	83
Admin	60	27	5	28
Housing	210	176	6	28
Recreational	650	580	20	50

ALL DATA EXCEPT TOTAL ACRES ARE APPROXIMATIONS

Site Location: OLF BRONSON

Land Use	Total Acres	Developed	Available for Development	
			Restricted	Unrestricted
Operational	732	388	250 WETLANDS	94
Training	0	0	0	0
Research & Development	0	0	0	0
Supply and Storage	0	0	0	0
Admin	0	0	0	0
Housing	0	0	0	0
Recreational	366	366	0	0

ALL DATA EXCEPT TOTAL ACRES ARE APPROXIMATIONS.
OPERATIONAL AREAS ARE INACTIVE.

Site Location: OLF CHOCTAW

Land Use	Total Acres	Developed	Available for Development	
			Restricted	Unrestricted
Operational	1,630	1,075	200	355
Training	0	0	0	0
Research & Development	0	0	0	0
Supply and Storage	0	0	0	0
Admin	0	0	0	0
Housing	0	0	0	0
Recreational	0	0	0	0

ALL DATA EXCEPT TOTAL ACRES ARE APPROXIMATIONS.
OLF CHOCTAW IS LEASED FROM USAF.

Future Requirements (cont.)

C. Ability for Expansion (cont.)

6. Identify the features of this installation that make it a strong candidate for basing/training other types of aircraft/aircrews and other operational units in the future

AIR OPS: Airfield is currently underutilized. Hangar and apron space will allow for greater aircraft numbers. Airport traffic and special use areas are likewise underutilized and can accommodate greater numbers of aircraft. Excellent location allows for year round training, weather figures substantiate this. Numerious other commands on base have further ability to expand and assist additional aircraft training units.

CTW-6: Comprised of outstanding airfield facilities, airspace availability, optimum climate, and docking for deep draft carriers, NAS Pensacola is the premiere training base in the Navy, because it is uniquely situated to accommodate all conceivable phases of training from primary to advanced strike and is, in fact, a favorite detachment site for fleet squadrons to conduct Joint Ops with the Air Force.

Weapons, gunnery, carrier qualifications, and all other phases of Flight Training have been conducted here. ~~and in the past and could easily be accommodated here in the future. The current tempo of operations at NASP could be doubled without exceeding capacity and without any adverse effects on community and environment based upon historical data.~~

Manpower Implications

A. Quality of Life

1. Military Housing

a. Family Housing:

(1) Do you have mandatory assignment to on-installation housing? (circle) No

(2) For military family housing in your locale provide the following information:

Type of Quarters	Number of Bedrooms	Total number of units	Number Adaquate /Permanent *	Number Substandard/ Semi-permanent	Number Inadequate/ Temporary
Officer	4+	55	55		
Officer	3	93	93		
Officer	1 or 2	16	16		
Enlisted	4+	84	84		
Enlisted	3	377	325	52	
Enlisted	1 or 2	260	114	146	
Mobile Homes					
Mobile Home lots		52			

(3) An inadequate/temporary facility cannot be made adequate/permanent for its present use through "economically justifiable means." For all the categories above where inadequate/temporary facilities are identified provide the following information:

* NP CNET 4+ DAVIS 11 MAY 9+

a. Facility Type/Code: **A/E**
b. What makes it inadequate/temporary? **Size - does not meet current minimum SF requirements for DOD family housing.**
c. What use is being made of the facility? **Housing**
d. What is the cost to upgrade the facility to substandard/semi-permanent? **N/A**
e. What other use could be made of the facility and at what cost? **Low income public housing; $0**
f. Current improvement plans and programmed funding: **Vinyl siding, new roofing recently completed.**
g. Has this facility condition resulted in "C3" or "C4" designation on your BASEREP? **Yes C3**

Manpower Implications (cont.)

A. Quality of Life (cont.)

(4) Complete the following table for the military housing waiting list.

Pay Grade	Number of Bedrooms	Number on List[5]	Average Wait
O-6/7/8/9	1	N/A	
	2	N/A	
	3	N/A	
	4+	10	12 MOS
O-4/5	1	N/A	
	2	N/A	
	3	16	12-18 MOS
	4+	3	4-7 MOS
O-1/2/3/CWO	1	N/A	
	2	36	4-8 MOS
	3	6	0-2 MOS
	4+	5	4-8 MOS
E7-E9 *	1	N/A	
	2	93	4-8 MOS
	3	104	4-8 MOS
	4+	30	3-7 OS
E1-E6 *	1	N/A	
	2	N/A	
	3	N/A	
	4+	N/A	

* NAS PENSACOLA MAINTAINS ONLY ONE WAITING LIST FOR ENLISTED PERSONNEL WHICH COVERS E1-E9.

RJ
CNET N442
DAVIS
11MAY94

[5]As of 31 March 1994.

Manpower Implications (cont.)

A. Quality of Life (cont.)

(5) What percent of your family housing units have all the amenities required by "The Facility Planning & Design Guide" (Military Handbook 1190 & Military Handbook 1035-Family Housing)?

100 Percent

(6) Provide the utilization rate for family housing for FY 1993.

Type of Quarters	Utilization Rate
Adequate/Permanent	96.6%
Substandard/Semi-Permanent	89.4%
Inadequate/Temporary	

(7) As of 31 March 1994, have you experienced much of a change since FY 1993? If so, why? If occupancy is under 98% (or vacancy over 2%), is there a reason?

Utilization rate for adequate quarters has improved to 98.4% as of 31 March 1994.
Utilization rate for substandard quarters had decreased to 78.8% as a result of rehabilitation of units.

(b) BEQ:

(1) Provide the utilization rate for BEQ's for FY 1993.

Type of Quarters	Utilization Rate
Adequate/Permanent	96%
Substandard/Semi-Permanent	0
Inadequate/Temporary	0 *

** Utilization rate for Inadequate/Geographic Bachelor status is 73%*
(INADEQUATE QTRS USED ONLY FOR GEO. BACH)

SH
ONET
N44331
5/11/94

(2) As of 31 March 1994, have you experienced much of a change since FY 1993? If so, why? If occupancy is under 95% (or vacancy over 5%), is there a reason? **No**

Manpower Implications (cont.)

A. Quality of Life (cont.)

(5) What percent of your family housing units have all the amenities required by "The Facility Planning & Design Guide" (Military Handbook 1190 & Military Handbook 1035-Family Housing)?

100 Percent

(6) Provide the utilization rate for family housing for FY 1993.

Type of Quarters	Utilization Rate
Adequate/Permanent	96.6%
Substandard/Semi-Permanent	89.4%
Inadequate/Temporary	

(7) As of 31 March 1994, have you experienced much of a change since FY 1993? If so, why? If occupancy is under 98% (or vacancy over 2%), is there a reason?

Utilization rate for adequate quarters has improved to 98.4% as of 31 March 1994.
Utilization rate for substandard quarters had decreased to 78.8% as a result of rehabilitation of units.

(b) BEQ:

(1) Provide the utilization rate for BEQ's for FY 1993.

Type of Quarters	Utilization Rate
Adequate/Permanent	96%
Substandard/Semi-Permanent	0
Inadequate/Temporary	0

73% in DC3

(2) As of 31 March 1994, have you experienced much of a change since FY 1993? If so, why? If occupancy is under 95% (or vacancy over 5%), is there a reason? **No**

Manpower Implications (cont.)
A. Quality of Life (cont.)

(c) BOQ:

(1) Provide the utilization rate for BOQs for FY 1993.

Type of Quarters	Utilization Rate
Adequate/Permanent	75%
Substandard/Semi-Permanent	0
Inadequate/Temporary	0 *

** Utilization rate for Inadequate/Geographic Bachelor status is 92%*
(Inadequate Qtrs used only for Geo Bach) CNET N44331 5/11/94

(2) As of 31 March 1994, have you experienced much of a change since FY 1993? If so, why? If occupancy is under 95% (or vacancy over 5%), is there a reason? **No**

(d) Have any family housing/BOQ/BEQ units been vacated for purposes of renovation or are new units under construction? **No**

Units Under Renovation or Construction				
Type Unit (Family Housing/ BOQ/BEQ)	Total Number	Size (Appropriate Measure)	Capacity (Appropriate Measure)	Availability Date
Family Housing	200	3 Bedroom	N/A	FY95
Family Housing	250	2/3/4 Bedroom	N/A	FY97

NOTE: Units will be vacated on a rotational basis. It is anticipated that no more than 25 units will be vacated for purpose of renovation at any one time.

(e) Provide the following information on any family housing/BOQ/BEQ units planned for construction (MILCON) for FY94 - 97. State type unit, total number of units, size, capacity, and availability date.

Type Unit (Family Housing/ BOQ/BEQ)	Total Number	Size (Appropriate Measure)	Capacity (Appropriate Measure)	Availability Date
BEQ (E1 - E4)	8 Buildings	108,506 SF each building	560 each building 4,480 total	1997
BEQ (E5 - E6)	1 Building	250,000 SF	450	1997
Family Housing	76	2 Bedroom	950 SF	FY97
Family Housing	40	3 Bedroom	1,250 SF	FY97

Manpower Implications (cont.)
A. Quality of Life (cont.)

(c) BOQ:

(1) Provide the utilization rate for BOQs for FY 1993.

Type of Quarters	Utilization Rate
Adequate/Permanent	75%
Substandard/Semi-Permanent	0
Inadequate/Temporary	0

92% in DC3

(2) As of 31 March 1994, have you experienced much of a change since FY 1993? If so, why? If occupancy is under 95% (or vacancy over 5%), is there a reason? **No**

(d) Have any family housing/BOQ/BEQ units been vacated for purposes of renovation or are new units under construction? **No**

Units Under Renovation or Construction				
Type Unit (Family Housing/ BOQ/BEQ)	Total Number	Size (Appropriate Measure)	Capacity (Appropriate Measure)	Availability Date
Family Housing	200	3 Bedroom	N/A	FY95
Family Housing	250	2/3/4 Bedroom	N/A	FY97

NOTE: Units will be vacated on a rotational basis. It is anticipated that no more than 25 units will be vacated for purpose of renovation at any one time.

(e) Provide the following information on any family housing/BOQ/BEQ units planned for construction (MILCON) for FY94 - 97. State type unit, total number of units, size, capacity, and availability date.

Type Unit (Family Housing/ BOQ/BEQ)	Total Number	Size (Appropriate Measure)	Capacity (Appropriate Measure)	Availability Date
BEQ (E1 - E4)	8 Buildings	108,506 SF each building	560 each building 4,480 total	1997
BEQ (E5 - E6)	1 Building	250,000 SF	450	1997
Family Housing	76	2 Bedroom	950 SF	FY97
Family Housing	40	3 Bedroom	1,250 SF	FY97

Manpower Implications (cont.)

A. Quality of Life (cont.)

2. For on-installation MWR facilities[6] available, complete the following table for each separate location. For off-installation government owned or leased recreation facilities indicate distance from installation. If there are any facilities not listed, include them at the bottom of the table.

LOCATION NAS PENSACOLA FL DISTANCE N/A

Facility	Unit of Measure	Total	Profitable (Y,N,N/A)
Auto Hobby	Indoor Bays	24	N/A
	Outdoor Bays	N/A	
Arts/Crafts	SF	1,920	N/A
Wood Hobby	SF	N/A	
Bowling	Lanes	24	Y
• Enlisted Club	SF	11,600	Y
Officer's Club	SF	31,196	Y
Library	SF	4,800	N/A
Library	Books	22,823	N/A
*** Theater**	Seats	~~N/A~~ 1500	N/A
ITT	SF	1,248	N/A
*** Museum/Memorial**	SF	N/A	
Pool (indoor)	Lanes	N/A	
Pool (outdoor) (1)	Lanes	18	N/A
Beach	LF	1,000	N/A
Lake	Each	N/A	
Tennis CT (2)	Each	15	N/A
• RECREATION CTR - ENLISTED	~~EA~~ SF	11,600	YES

CNATRA NG [illegible] Ref. CNET [illegible] 5-11-94

*** While not an MWR facility, a theater does exist for training purposes.**

*** While not an MWR facility, NAS Pensacola is home to the National Museum of Naval Aviation.**

• THE RECREATION CENTER/ ENLISTED, INCLUDES A BAR/ ITALIAN FAST FOOD AREA, AND GAME ROOM.

Spaces designed for a particular use. A single building might contain several facilities, each of which should be listed separately.

Manpower Implications (cont.)

A. Quality of Life (cont.)

Facility	Unit of Measure	Total	Profitable (Y,N,N/A)
Volleyball CT (outdoor)	Each	6	N/A
Basketball CT (outdoor)	Each	N/A	
Racquetball CT (indoor/outdoor)	Each	5	N/A
Squash CT	Each	N/A	
Golf Course (3)	Holes	54	Y
Driving Range	Tee Boxes	33	Y
Gymnasium	SF	33,000	N/A
Fitness Center	SF	8,080	N/A
Marina (4)	Berths	209	Y
Stables	Stalls	N/A	
Rod and Gun Club/Range	Each	N/A	
Softball Fld	Each	7	N/A
Football Fld (5)	Each	2	N/A
Soccer Fld (5)	Each	2	N/A
Youth Center	SF	23,328	N/A
Lighthouse Point All Hands Club	SF	16,426	Y
Bayshores Restaurant and Lounge	SF	6,700	N
Additional Location at NEX Mall opens June 94	SF	2,000	

NOTES:

1. Pools breakdown = Officers 2 (6 lanes); Enlisted 1 (6 lanes).
2. Total includes 2 indoor tennis courts in Bldg 632.
3. Golf Course breakdown - 27 Championship Holes, 18 Executive Length, and 9 holes Par Three located of-base at Saufley Field.
4. Marinas breakdown = Sailing Marina 166 wetslips, Powerboat Marina 43 wetslips with 50 additional slips to open September 1994.
5. Football and Soccer share same 2 fields.

Other facilities not listed:

Campground/RV Park/12 Rental Cabins 4-mile Fitness Trail
Family Picnic Center Waterfront Area 3 Little League Ballfields

Manpower Implications (cont.)

A. Quality of Life (cont.)

3. Is your library part of a regional interlibrary loan program? **No**

4. Installation Family Support Facilities and Programs

a. Complete the following table on the availability of child care in a child care center on your installation.

Age Category	Capacity (Children)	SF			# of PN on Wait List	Avg Wait (Days)
		Adequate/ Permanent	Substandard/ Semi-Permanent	Inadequate/ Temporary		
0-6 Mos	13	800			36	180
6-18 Mos	20	700			15	90
18Mos-5yrs	178	6,230 (1)			18 (2)	0

NOTES:
1. Two classroom expansion (46 children, 1,610 SF) due to open July 1994.
2. These children are on our waiting list because their siblings are in need of infant care (we are full) in order for them to register.

b. An inadequate/temporary facility cannot be made adequate/permanent for its present use through "economically justifiable means." For all the categories above where inadequate/temporary facilities are identified provide the following information:

- Facility Type/Code:
- What makes it inadequate/temporary?
- What use is being made of the facility?
- What is the cost to upgrade the facility to substandard/semi-permanent?
- What other use could be made of the facility and at what cost?
- Current improvement plans and programmed funding:
- Has this facility condition resulted in "C3" or "C4" designation on your BASEREP?

c. If you have a waiting list, describe what programs or facilities other than those sponsored by your command are available to accommodate those on the list.

After Family Home Care, we recommend the services of West Florida Child Care Services (This referral organization is sponsored by the State of Florida).

Manpower Implications (cont.)

A. Quality of Life (cont.)

d. Are there other military child care facilities within 30 minutes of the installation? State owner and capacity (i.e., 60 children, 0-5 yrs).

NTTC Corry Station Child Development Center (45 children, 0-5 yrs).

f. Complete the following table for services available on your installation. If you have any services not listed, include them at the bottom.

Service	Unit of Measure	Qty
Exchange	SF	89,220
Gas Station	SF	3,600
Auto Repair	SF	7,330
Auto Parts Store	SF	6,550
Commissary	SF	41,100
Mini-Mart	SF	18,428
Package Store	SF	Combined with Mini-Mart
* Fast Food Restaurants	Each	5 ~~19,140~~
Bank/Credit Union	Each	1 Bank 1 Credit Union
Family Service Center	SF	8,625
Laundromat	SF	628
Dry Cleaners/Tailor Shop	Each	2,328
Alcohol Rehabilitation Center	PN	0
Chapel	PN	11
FSC Classroom/ Auditorium	PN	20
FSC Conference Room	PN	15
American Red Cross	PN	3
Personalized Services	SF	7,608

R. PATRICK
CNET N-432
5-11-94

* INCLUDES McDONALD'S, NEX CAFETERIA, AND (3) FAST FOOD/SNACK BAR

Manpower Implications (cont.)

A. Quality of Life (cont.)

5. Proximity of closest major metropolitan areas (provide at least three):

City	Distance (Miles)
Pensacola, FL	6
Tallahassee, FL	172
Mobile, AL	56
New Orleans, LA	176

Manpower Implications (cont.)

A. Quality of Life (cont.)

6. Standard Rate VHA Data for Cost of Living:

Paygrade	With Dependents	Without Dependents
E1	24.70	13.82
E2	24.70	15.83
E3	12.40	9.14
E4	37.43	26.12
E5	40.16	28.04
E6	30.73	20.92
E7	33.48	23.25
E8	14.87	11.24
E9	25.26	19.17
W1	70.84	53.80
W2	36.90	28.94
W3	49.33	40.10
W4	42.78	39.73
O1E	20.76	15.03
O2E	28.55	22.77
O3E	40.08	33.91
O1	34.89	25.71
O2	0.00	0.00
O3	55.31	46.56
O4	33.97	29.54
O5	90.39	74.75
O6	145.67	120.57
O7	74.18	60.27

Command: **NAS Pensacola**

Data Call Number Twenty Revisions
(Pages 36 and 65)

I certify that the information contained herein is accurate and complete to the best of my knowledge and belief.

MAJOR CLAIMANT LEVEL

R. K. U. KIHUNE
NAME

Signature

20 JUN 1994

CNET
Title

Date

CNET
Activity

I certify that the information contained herein is accurate and complete to the best of my knowledge and belief.

DEPUTY CHIEF OF NAVAL OPERATIONS (LOGISTICS)
DEPUTY CHIEF OF STAFF (INSTALLATIONS & LOGISTICS)

P.W. DRENNON
NAME

Signature

ACTING
Title

6/24/94
Date

Encl (1)

17 JUN REC'D

BRAC-95 DATA CALL NUMBER 20 CERTIFICATION

I certify that the information contained herein is accurate and complete to the best of my knowledge and belief.

NEXT ECHELON LEVEL (if applicable)

M.C. VOHT CAPT USN
NAME (Please type or print)

Signature

COMMANDER
Title

5/27/94
Date

TRAINING AIR WING SIX
Activity

I certify that the information contained herein is accurate and complete to the best of my knowledge and belief.

NEXT ECHELON LEVEL (if applicable)

C. L. REYNOLDS, CAPT, USN
~~T. R. STATSKEY, CAPT, USN~~
NAME (Please type or print)

Signature

CHIEF OF NAVAL AIR TRAINING (ACTING)
Title

15 JUNE 94
Date

NAVAL AIR TRAINING COMMAND
Activity

I certify that the information contained herein is accurate and complete to the best of my knowledge and belief.

MAJOR CLAIMANT LEVEL

NAME (Please type or print)

Signature

Title

Date

Activity

I certify that the information contained herein is accurate and complete to the best of my knowledge and belief.

DEPUTY CHIEF OF NAVAL OPERATIONS (LOGISTICS)
DEPUTY CHIEF OF STAFF (INSTALLATIONS & LOGISTICS)

NAME (Please type or print)

Signature

Title

Date

17 JUN REC'D

BRAC-95 DATA CALL NUMBER 20 CERTIFICATION

Reference: SECNAVNOTE 11000 of 08 December 1993

In accordance with policy set forth by the Secretary of the Navy, personnel of the Department of the Navy, uniformed and civilian, who provide information for use in the BRAC-95 process are required to provide a signed certification that states "I certify that the information contained herein is accurate and complete to the best of my knowledge and belief."

The signing of this certification constitutes a representation that the certifying official has reviewed the information and either (1) personally vouches for its accuracy and completeness or (2) has possession of, and is relying upon, a certification executed by a competent subordinate.

Each individual in your activity generating information for the BRAC-95 process must certify that information. Enclosure (1) is provided for individual certifications and may be duplicated as necessary. You are directed to maintain those certifications at your activity for audit purposes. For purposes of this certification sheet, the commander of the activity will begin the certification process and each reporting senior in the Chain of Command reviewing the information will also sign this certification sheet. This sheet must remain attached to this package and be forwarded up the Chain of Command. Copies must be retained by each level in the Chain of Command for audit purposes.

I certify that the information contained herein is accurate and complete to the best of my knowledge and belief.

ACTIVITY COMMANDER

W. T. R. BOGLE, CAPT, U.S. NAVY
NAME (Please type or print)

W T R Bogle
Signature

COMMANDING OFFICER
Title

2 MAY 1994
Date

NAVAL AIR STATION PENSACOLA
Activity

Command: **NAS Pensacola**

Data Call Number Twenty Revisions
(Pages 65 and 65a)

I certify that the information contained herein is accurate and complete to the best of my knowledge and belief.

MAJOR CLAIMANT LEVEL

T. L. McCLELLAND
NAME

Signature

Acting
Title

7/20/94
Date

CNET
Activity

I certify that the information contained herein is accurate and complete to the best of my knowledge and belief.

DEPUTY CHIEF OF NAVAL OPERATIONS (LOGISTICS)
DEPUTY CHIEF OF STAFF (INSTALLATIONS & LOGISTICS)

W. A. EARNER
NAME

Signature

Title

8/3/94
Date

ADDENDUM TO BRAC-95 DATA CALL 20 CERTIFICATION

I certify that the information contained herein is accurate and complete to the best of my knowledge and belief.

NEXT ECHELON LEVEL (if applicable)

M.C. VOHT CAPT USN
NAME (Please type or print)

Signature

COMMANDER
Title

6/27/94
Date

TRAINING AIR WING SIX
Activity

I certify that the information contained herein is accurate and complete to the best of my knowledge and belief.

NEXT ECHELON LEVEL (if applicable)

P. R. STATSKEY, CAPT, USN
NAME (Please type or print)

Signature

CHIEF OF NAVAL AIR TRAINING (ACTING)
Title

15 JUL 94
Date

NAVAL AIR TRAINING COMMAND
Activity

I certify that the information contained herein is accurate and complete to the best of my knowledge and belief.

MAJOR CLAIMANT LEVEL

NAME (Please type or print)

Signature

Title

Date

Activity

I certify that the information contained herein is accurate and complete to the best of my knowledge and belief.

DEPUTY CHIEF OF NAVAL OPERATIONS (LOGISTICS)
DEPUTY CHIEF OF STAFF (INSTALLATIONS & LOGISTICS)

NAME (Please type or print)

Signature

Title

Date

ADDENDUM TO BRAC-95 DATA CALL 20 CERTIFICATION pg 65+65d

Reference: SECNAVNOTE 11000 of 08 December 1993

In accordance with policy set forth by the Secretary of the Navy, personnel of the Department of the Navy, uniformed and civilian, who provide information for use in the BRAC-95 process are required to provide a signed certification that states "I certify that the information contained herein is accurate and complete to the best of my knowledge and belief."

The signing of this certification constitutes a representation that the certifying official has reviewed the information and either (1) personally vouches for its accuracy and completeness or (2) has possession of, and is relying upon, a certification executed by a competent subordinate.

Each individual in your activity generating information for the BRAC-95 process must certify that information. Enclosure (1) is provided for individual certifications and may be duplicated as necessary. You are directed to maintain those certifications at your activity for audit purposes. For purposes of this certification sheet, the commander of the activity will begin the certification process and each reporting senior in the Chain of Command reviewing the information will also sign this certification sheet. This sheet must remain attached to this package and be forwarded up the Chain of Command. Copies must be retained by each level in the Chain of Command for audit purposes.

I certify that the information contained herein is accurate and complete to the best of my knowledge and belief.

ACTIVITY COMMANDER

W. T. R. BOGLE, CAPT, U.S. NAVY
NAME (Please type or print)

WTR Bogle
Signature

COMMANDING OFFICER
Title

6/24/94
Date

NAVAL AIR STATION PENSACOLA
Activity

328

Command: **NAS Pensacola**

Data Call Number Twenty Revisions
(Page 37a)

I certify that the information contained herein is accurate and complete to the best of my knowledge and belief.

MAJOR CLAIMANT LEVEL

T. W. WRIGHT
NAME

T W Wright
Signature

CNET
Title

8-19-94
Date

CNET
Activity

I certify that the information contained herein is accurate and complete to the best of my knowledge and belief.

DEPUTY CHIEF OF NAVAL OPERATIONS (LOGISTICS)
DEPUTY CHIEF OF STAFF (INSTALLATIONS & LOGISTICS)

J. B. GREENE, JR.
NAME

J B Greene Jr
Signature

ACTING
Title

22 AUG 1994
Date

AMENDMENT TO BRAC-95 DATA CALL 20 CERTIFICATION

I certify that the information contained herein is accurate and complete to the best of my knowledge and belief.

NEXT ECHELON LEVEL (if applicable)

M.C. VOHT, CAPT USN
NAME (Please type or print)

Signature

COMMANDER
Title

8/8/94
Date

TRAINING AIR WING SIX
Activity

I certify that the information contained herein is accurate and complete to the best of my knowledge and belief.

NEXT ECHELON LEVEL (if applicable)

W. B. HAYDEN, RADM, USN
NAME (Please type or print)

Signature

Chief of Naval Air Training
Title

9AUG94
Date

Naval Air Training Command
Activity

I certify that the information contained herein is accurate and complete to the best of my knowledge and belief.

MAJOR CLAIMANT LEVEL

NAME (Please type or print)

Signature

Title

Date

Activity

I certify that the information contained herein is accurate and complete to the best of my knowledge and belief.

DEPUTY CHIEF OF NAVAL OPERATIONS (LOGISTICS)
DEPUTY CHIEF OF STAFF (INSTALLATIONS & LOGISTICS)

NAME (Please type or print)

Signature

Title

Date

AMENDMENT TO BRAC-95 DATA CALL 20 CERTIFICATION

Reference: SECNAVNOTE 11000 of 08 December 1993

In accordance with policy set forth by the Secretary of the Navy, personnel of the Department of the Navy, uniformed and civilian, who provide information for use in the BRAC-95 process are required to provide a signed certification that states "I certify that the information contained herein is accurate and complete to the best of my knowledge and belief."

The signing of this certification constitutes a representation that the certifying official has reviewed the information and either (1) personally vouches for its accuracy and completeness or (2) has possession of, and is relying upon, a certification executed by a competent subordinate.

Each individual in your activity generating information for the BRAC-95 process must certify that information. Enclosure (1) is provided for individual certifications and may be duplicated as necessary. You are directed to maintain those certifications at your activity for audit purposes. For purposes of this certification sheet, the commander of the activity will begin the certification process and each reporting senior in the Chain of Command reviewing the information will also sign this certification sheet. This sheet must remain attached to this package and be forwarded up the Chain of Command. Copies must be retained by each level in the Chain of Command for audit purposes.

I certify that the information contained herein is accurate and complete to the best of my knowledge and belief.

ACTIVITY COMMANDER

TIMOTHY THOMSON, CAPT, U.S. NAVY
NAME (Please type or print)

Signature

COMMANDING OFFICER
Title

0 4 AUG 1994
Date

NAVAL AIR STATION PENSACOLA
Activity

228 R

Command: **NAS Pensacola**

Data Call Number Twenty Revisions
(Pages 41-a, 42, and 42-a)

I certify that the information contained herein is accurate and complete to the best of my knowledge and belief.

MAJOR CLAIMANT LEVEL

T. W. WRIGHT
NAME

T W Wright
Signature

CNET
Title

9-23-94
Date

CNET
Activity

I certify that the information contained herein is accurate and complete to the best of my knowledge and belief.

DEPUTY CHIEF OF NAVAL OPERATIONS (LOGISTICS)
DEPUTY CHIEF OF STAFF (INSTALLATIONS & LOGISTICS)

W. A. EARNER
NAME

W A Earner
Signature

Title

10/5/94
Date

Encl (1)

NAS PENSACOLA UIC 00204
STATION REVISIONS OF 9/7/94, PGS 41A,42 & 42A

REVISION TO BRAC-95 DATA CALL 20 CERTIFICATION

I certify that the information contained herein is accurate and complete to the best of my knowledge and belief.

NEXT ECHELON LEVEL (if applicable)

M. C. VOGT, CAPT, USN	
NAME (Please type or print)	Signature
COMMANDER	9/8/94
Title	Date
TRAINING AIR WING SIX	
Activity	

I certify that the information contained herein is accurate and complete to the best of my knowledge and belief.

NEXT ECHELON LEVEL (if applicable)

W. B. HAYDEN, RADM, USN	
NAME (Please type or print)	Signature
CHIEF OF NAVAL AIR TRAINING	19SEP94
Title	Date
NAVAL AIR TRAINING COMMAND	
Activity	

I certify that the information contained herein is accurate and complete to the best of my knowledge and belief.

MAJOR CLAIMANT LEVEL

NAME (Please type or print)	Signature
Title	Date
Activity	

I certify that the information contained herein is accurate and complete to the best of my knowledge and belief.

DEPUTY CHIEF OF NAVAL OPERATIONS (LOGISTICS)
DEPUTY CHIEF OF STAFF (INSTALLATIONS & LOGISTICS)

NAME (Please type or print)	Signature
	10/5/94
Title	Date

REVISION TO BRAC-95 DATA CALL 20 CERTIFICATION

Reference: SECNAVNOTE 11000 of 08 December 1993

In accordance with policy set forth by the Secretary of the Navy, personnel of the Department of the Navy, uniformed and civilian, who provide information for use in the BRAC-95 process are required to provide a signed certification that states "I certify that the information contained herein is accurate and complete to the best of my knowledge and belief."

The signing of this certification constitutes a representation that the certifying official has reviewed the information and either (1) personally vouches for its accuracy and completeness or (2) has possession of, and is relying upon, a certification executed by a competent subordinate.

Each individual in your activity generating information for the BRAC-95 process must certify that information. Enclosure (1) is provided for individual certifications and may be duplicated as necessary. You are directed to maintain those certifications at your activity for audit purposes. For purposes of this certification sheet, the commander of the activity will begin the certification process and each reporting senior in the Chain of Command reviewing the information will also sign this certification sheet. This sheet must remain attached to this package and be forwarded up the Chain of Command. Copies must be retained by each level in the Chain of Command for audit purposes.

I certify that the information contained herein is accurate and complete to the best of my knowledge and belief.

ACTIVITY COMMANDER

TIMOTHY THOMSON, CAPT, U.S. NAVY
NAME (Please type or print)

Signature

COMMANDING OFFICER
Title

9/7/94
Date

NAVAL AIR STATION PENSACOLA
Activity

PAGES:
41-a R (9/7/94)
42 R (9/7/94)
42-a R (9/7/94)

Command: **NAS Pensacola**

Data Call Number Twenty Revisions
(Pages 41, 41-a, and 43)

I certify that the information contained herein is accurate and complete to the best of my knowledge and belief.

MAJOR CLAIMANT LEVEL

P. E. TOBIN
NAME

PETobin
Signature

Acting
Title

10/6/94
Date

CNET
Activity

I certify that the information contained herein is accurate and complete to the best of my knowledge and belief.

DEPUTY CHIEF OF NAVAL OPERATIONS (LOGISTICS)
DEPUTY CHIEF OF STAFF (INSTALLATIONS & LOGISTICS)

P.W. DRENNAN
NAME

Signature

Acting
Title

12 OCT 1994
Date

NAS PENSACOLA UIC 00204
STATION REVISIONS OF 9/27/94, PAGES 41,41A & 43

BRAC-95 DATA CALL NUMBER 20 CERTIFICATION

I certify that the information contained herein is accurate and complete to the best of my knowledge and belief.

NEXT ECHELON LEVEL (if applicable)

M. C. VOGT, CAPT, U.S. NAVY
NAME (Please type or print)

Signature

COMMANDER
Title

9/27/94
Date

TRAINING AIR WING SIX
Activity

I certify that the information contained herein is accurate and complete to the best of my knowledge and belief.

NEXT ECHELON LEVEL (if applicable)

W. B. HAYDEN, RADM, USN
NAME (Please type or print)

Signature

CHIEF OF NAVAL AIR TRAINING
Title

30 Oct 94
Date

NAVAL AIR TRAINING COMMAND
Activity

I certify that the information contained herein is accurate and complete to the best of my knowledge and belief.

MAJOR CLAIMANT LEVEL

NAME (Please type or print)

Signature

Title

Date

Activity

I certify that the information contained herein is accurate and complete to the best of my knowledge and belief.

DEPUTY CHIEF OF NAVAL OPERATIONS (LOGISTICS)
DEPUTY CHIEF OF STAFF (INSTALLATIONS & LOGISTICS)

NAME (Please type or print)

Signature

Title

Date

Snl (5)

BRAC-95 DATA CALL NUMBER 20 CERTIFICATION

Reference: SECNAVNOTE 11000 of 08 December 1993

In accordance with policy set forth by the Secretary of the Navy, personnel of the Department of the Navy, uniformed and civilian, who provide information for use in the BRAC-95 process are required to provide a signed certification that states "I certify that the information contained herein is accurate and complete to the best of my knowledge and belief."

The signing of this certification constitutes a representation that the certifying official has reviewed the information and either (1) personally vouches for its accuracy and completeness or (2) has possession of, and is relying upon, a certification executed by a competent subordinate.

Each individual in your activity generating information for the BRAC-95 process must certify that information. Enclosure (1) is provided for individual certifications and may be duplicated as necessary. You are directed to maintain those certifications at your activity for audit purposes. For purposes of this certification sheet, the commander of the activity will begin the certification process and each reporting senior in the Chain of Command reviewing the information will also sign this certification sheet. This sheet must remain attached to this package and be forwarded up the Chain of Command. Copies must be retained by each level in the Chain of Command for audit purposes.

I certify that the information contained herein is accurate and complete to the best of my knowledge and belief.

ACTIVITY COMMANDER

R. P. OWEN, CDR, U.S. NAVY
NAME (Please type or print)

Signature

COMMANDING OFFICER, ACTING
Title

9-27-94
Date

NAVAL AIR STATION PENSACOLA
Activity

Pages:
41 R (9/27/94)
41-a R (9/27/94)
43 R (9/27/94)

Command: **NAS Pensacola**

Data Call Number Twenty Revisions
(Pages 41, 41-a, 42, and 43)

I certify that the information contained herein is accurate and complete to the best of my knowledge and belief.

MAJOR CLAIMANT LEVEL

P. E. TOBIN
NAME

PETobin
Signature

Acting
Title

10/27/94
Date

CNET
Activity

I certify that the information contained herein is accurate and complete to the best of my knowledge and belief.

DEPUTY CHIEF OF NAVAL OPERATIONS (LOGISTICS)
DEPUTY CHIEF OF STAFF (INSTALLATIONS & LOGISTICS)

W. A. EARNER
NAME

WAEarner
Signature

Title

11/9/94
Date

BRAC 95 DATA CALL 20
NAS PENSACOLA UIC 00204
STATION REV OF 9/28/94 OF 41, 41a, 42 & 43

REVISION TO BRAC-95 DATA CALL 20 CERTIFICATION

I certify that the information contained herein is accurate and complete to the best of my knowledge and belief.

NEXT ECHELON LEVEL (if applicable)

MICHAEL C. VOGT, CAPT, U.S. NAVY
NAME (Please type or print)

Signature

COMMANDER
Title

10/17/94
Date

TRAINING AIR WING SIX
Activity

I certify that the information contained herein is accurate and complete to the best of my knowledge and belief.

NEXT ECHELON LEVEL (if applicable)

P. R. STATSKEY, CAPT, USN
NAME (Please type or print)

Signature

CHIEF OF NAVAL AIR TRAINING(ACTING)
Title

25 OCT 94
Date

NAVAL AIR TRAINING COMMAND
Activity

I certify that the information contained herein is accurate and complete to the best of my knowledge and belief.

MAJOR CLAIMANT LEVEL

NAME (Please type or print)

Signature

Title

Date

Activity

I certify that the information contained herein is accurate and complete to the best of my knowledge and belief.

DEPUTY CHIEF OF NAVAL OPERATIONS (LOGISTICS)
DEPUTY CHIEF OF STAFF (INSTALLATIONS & LOGISTICS)

NAME (Please type or print)

Signature

Title

Date

BRAC-95 DATA CALL NUMBER 20 CERTIFICATION

Reference: SECNAVNOTE 11000 of 08 December 1993

In accordance with policy set forth by the Secretary of the Navy, personnel of the Department of the Navy, uniformed and civilian, who provide information for use in the BRAC-95 process are required to provide a signed certification that states "I certify that the information contained herein is accurate and complete to the best of my knowledge and belief."

The signing of this certification constitutes a representation that the certifying official has reviewed the information and either (1) personally vouches for its accuracy and completeness or (2) has possession of, and is relying upon, a certification executed by a competent subordinate.

Each individual in your activity generating information for the BRAC-95 process must certify that information. Enclosure (1) is provided for individual certifications and may be duplicated as necessary. You are directed to maintain those certifications at your activity for audit purposes. For purposes of this certification sheet, the commander of the activity will begin the certification process and each reporting senior in the Chain of Command reviewing the information will also sign this certification sheet. This sheet must remain attached to this package and be forwarded up the Chain of Command. Copies must be retained by each level in the Chain of Command for audit purposes.

I certify that the information contained herein is accurate and complete to the best of my knowledge and belief.

ACTIVITY COMMANDER

TIMOTHY THOMSON, CAPT, U.S. NAVY
NAME (Please type or print)

Signature

COMMANDING OFFICER
Title

9/28/94
Date

NAVAL AIR STATION PENSACOLA
Activity

Pages:
41 R (9/28/94)
41-a-R (9/28/94)
42 R (9/28/94)
43 R (9/28/94)

Document Separator

278

26 JUL 2000

Table 1A - Base Operating Support Costs (Other Than DBOF Overhead)
Claimant :CNET

Activity Name: CNET STAFF UIC: 00062

Category	FY 1996 BOS Costs ($000) Non-Labor	Labor	Total
1. REAL PROPERTY MAINTENANCE COSTS:			
1a. Maintenance and Repair	0	0	0
1b. Minor Construction	0	0	0
1c. Sub-total 1a. and 1b.	0	0	0
2. OTHER BASE OPERATING COSTS:			
2a. Utilities	107	0	107
2b. Transportation	0	0	0
2c. Environmental	0	0	0
2d. Facility Leases	0	0	0
2e. Morale, Welfare & Recreation	0	0	0
2f. Bachelor Quarters	0	0	0
2g. Child Care Centers	0	0	0
2h. Family Service Centers	0	0	0
2i. Administration	0	0	0
2j. Other	390	0	390
2k. Sub-total 2a. through 2j.	497	0	497
3. GRAND TOTAL (sum of 1c. and 2k.)	497	0	497

Appropriation:

O&M,N	497
MPN	0

26 JUL REC'D

DATA CALL 66
INSTALLATION RESOURCES

2. Services/Supplies Cost Data. The purpose of Table 2 is to provide information about projected FY 1996 costs for the purchase of services and supplies by the activity. (Note: **Unlike Question 1 and Tables 1A and 1B, above, this question is not limited to overhead costs.**) The source for this information, where possible, should be either the NAVCOMPT OP-32 Budget Exhibit for O&M activities or the NAVCOMPT UC/FUND-1/IF-4 exhibit for DBOF activities. Information must reflect FY 1996 budget data supporting the FY 1996 NAVCOMPT Budget Submit. Break out cost data by the major sub-headings identified on the OP-32 or UC/FUND-1/IF-4 exhibit, disregarding the sub-headings on the exhibit which apply to civilian and military salary costs and depreciation. Please note that while the OP-32 exhibit aggregates information by budget activity, this data call requests OP-32 data for the activity responding to the data call. Refer to NAVCOMPTINST 7102.2B of 23 April 1990, Subj: Guidance for the Preparation, Submission and Review of the Department of the Navy (DON) Budget Estimates (DON Budget Guidance Manual) with Changes 1 and 2 for more information on categories of costs identified. Any rows that do not apply to your activity may be left blank. However, totals reported should reflect all costs, exclusive of salary and depreciation.

Table 2 - Services/Supplies Cost Data

Activity Name: CNET	**UIC:** 00062
Cost Category	**FY 1996 Projected Costs ($000)**
Travel:	1,039
Material and Supplies (including equipment):	476
Industrial Fund Purchases (other DBOF purchases):	0
Transportation:	0
Other Purchases (Contract support, etc.):	303
Total:	1,818

DATA CALL 66
INSTALLATION RESOURCES

3. Contractor Workyears.

a. On-Base Contract Workyear Table. Provide a projected estimate of the number of contract workyears expected to be performed "on base" in support of the installation during FY 1996. Information should represent an annual estimate on a full-time equivalency basis. Several categories of contract support have been identified in the table below. While some of the categories are self-explanatory, please note that the category "mission support" entails management support, labor service and other mission support contracting efforts, e.g., aircraft maintenance, RDT&E support, technical services in support of aircraft and ships, etc.

Table 3 - Contract Workyears	
Activity Name: CNET	UIC: 00062
Contract Type	FY 1996 Estimated Number of Workyears On-Base
Construction:	
Facilities Support:	
Mission Support:	2
Procurement:	
Other:* Janitorial Contract	4
Total Workyears:	6

* Note: Provide a brief narrative description of the type(s) of contracts, if any, included under the "Other" category.

DATA CALL 66
INSTALLATION RESOURCES

b. Potential Disposition of On-Base Contract Workyears. If the mission/functions of your activity were relocated to another site, what would be the anticipated disposition of the on-base contract workyears identified in Table 3.?

1) Estimated number of contract workyears which would be transferred to the receiving site (This number should reflect the number of jobs which would in the future be contracted for at the receiving site, not an estimate of the number of people who would move or an indication that work would necessarily be done by the same contractor(s)):

6

2) Estimated number of workyears which would be eliminated: 0

3) Estimated number of contract workyears which would remain in place (i.e., contract would remain in place in current location even if activity were relocated outside of the local area): 0

DATA CALL 66
INSTALLATION RESOURCES

c. **"Off-Base" Contract Workyear Data.** Are there any contract workyears located in the local community, but not on-base, which would either be eliminated or relocated if your activity were to be closed or relocated? If so, then provide the following information (ensure **that numbers reported below do not double count numbers included in 3.a. and 3.b., above):**

No. of Additional Contract Workyears Which Would Be Eliminated	General Type of Work Performed on Contract (e.g., engineering support, technical services, etc.)
0	

No. of Additional Contract Workyears Which Would Be Relocated	General Type of Work Performed on Contract (e.g., engineering support, technical services, etc.)
0	

BRAC-95 CERTIFICATION

I certify that the information contained herein is accurate and complete to the best of my knowledge and belief.

NAME (Please type or print)	Signature
Title	Date
Division	
Department	
Activity	

Enclosure (1)

Command: **CNET**

Data Call Number Sixty-Six

I certify that the information contained herein is accurate and complete to the best of my knowledge and belief.

MAJOR CLAIMANT LEVEL

T. J. BARRY
NAME

Signature

Acting
Title

28 July 94
Date

CNET
Activity

I certify that the information contained herein is accurate and complete to the best of my knowledge and belief.

DEPUTY CHIEF OF NAVAL OPERATIONS (LOGISTICS)
DEPUTY CHIEF OF STAFF (INSTALLATIONS & LOGISTICS)

W. A. EARNER
NAME

Signature

Title

8/9/94
Date

Command: **CNET**

Data Call Number Sixty-Six

I certify that the information contained herein is accurate and complete to the best of my knowledge and belief.

MAJOR CLAIMANT LEVEL

T. J. BARRY
NAME

T J Barry
Signature

Acting
Title

28 July 94
Date

CNET
Activity

I certify that the information contained herein is accurate and complete to the best of my knowledge and belief.

DEPUTY CHIEF OF NAVAL OPERATIONS (LOGISTICS)
DEPUTY CHIEF OF STAFF (INSTALLATIONS & LOGISTICS)

W. A. EARNER
NAME

W A Earner
Signature

Title

8/9/94
Date

Command: **CNET**

Data Call Number Sixty-Six

I certify that the information contained herein is accurate and complete to the best of my knowledge and belief.

MAJOR CLAIMANT LEVEL

T. J. BARRY
NAME

T J Barry
Signature

Acting
Title

28 July 94
Date

CNET
Activity

I certify that the information contained herein is accurate and complete to the best of my knowledge and belief.

DEPUTY CHIEF OF NAVAL OPERATIONS (LOGISTICS)
DEPUTY CHIEF OF STAFF (INSTALLATIONS & LOGISTICS)

W. A. EARNER
NAME

W A Earner
Signature

Title

8/9/94
Date

Document Separator

DATA CALL 66
INSTALLATION RESOURCES

Activity Information:

Activity Name:	NORU
UIC:	39088
Host Activity Name (if response is for a tenant activity):	N/A
Host Activity UIC:	N/A

General Instructions/Background. A separate response to this data call must be completed for each Department of the Navy (DON) host, independent and tenant activity which separately budgets BOS costs (regardless of appropriation), and, is located in the United States, its territories or possessions.

1. Base Operating Support (BOS) Cost Data. Data is required which captures the total annual cost of operating and maintaining Department of the Navy (DON) shore installations. Information must reflect FY 1996 budget data supporting the FY 1996 NAVCOMPT Budget Submit. Two tables are provided. Table 1A identifies "Other than DBOF Overhead" BOS costs and Table 1B identifies "DBOF Overhead" BOS costs. These tables must be completed, as appropriate, for all DON host, independent or tenant activities which separately budget BOS costs (regardless of appropriation), and, are located in the United States, its territories or possessions. Responses for DBOF activities may need to include both Table 1A and 1B to ensure that all BOS costs, including those incurred by the activity in support of tenants, are identified. If both table 1A and 1B are submitted for a single DON activity, please ensure that no data is double counted (that is, included on both Table 1A and 1B). The following tables are designed to collect all BOS costs currently budgeted, regardless of appropriation, e.g., Operations and Maintenance, Research and Development, Military Personnel, etc. Data must reflect FY 1996 and should be reported in thousands of dollars.

a. Table 1A - Base Operating Support Costs (Other Than DBOF Overhead). This Table should be completed to identify "Other Than DBOF Overhead" Costs. Display, in the format shown on the table, the O&M, R&D and MPN resources currently budgeted for BOS services. O&M cost data must be consistent with data provided on the BS-1 exhibit. Report only direct funding for the activity. Host activities should not include reimbursable support provided to tenants, since tenants will be separately reporting these costs. Military personnel costs should be included on the appropriate lines of the table. Please ensure that individual lines of the table do not include duplicate costs. Add additional

lines to the table (following line 2j., as necessary, to identify any additional cost elements not currently shown). **Leave shaded areas of table blank.**

Table 1A - Base Operating Support Costs (Other Than DBOF Overhead)				
Activity Name: NORU		**UIC:** 39088		
Category	**FY 1996 BOS Costs ($000)**			
	Non-Labor	**Labor**	**Total**	
1. Real Property Maintenance Costs:				
1a. Maintenance and Repair	0	0	0	
1b. Minor Construction	0	0	0	
1c. Sub-total 1a. and 1b.	0	0	0	
2. Other Base Operating Support Costs:				
2a. Utilities	122	0	122	R
2b. Transportation	93	0	93	R
2c. Environmental	0	0	0	
2d. Facility Leases	17	0	17	R
2e. Morale, Welfare & Recreation	0	0	0	
2f. Bachelor Quarters	0	0	0	
2g. Child Care Centers	0	0	0	
2h. Family Service Centers	0	0	0	
2i. Administration	0	0	0	
2j. Other (Specify) COMMUNICATIONS, GENERAL ENGINEERING SUPPORT	145	0	145	R
2k. Sub-total 2a. through 2j:	377	0	377	R
3. Grand Total (sum of 1c. and 2k.):	377	0	377	R

b. Funding Source. If data shown on Table 1A reflects more than one appropriation, then please provide a break out of the total shown for the "3. Grand-Total" line, by appropriation:

Appropriation	Amount ($000)
N/A	

c. Table 1B - Base Operating Support Costs (DBOF Overhead). This Table should be submitted for all current DBOF activities. Costs reported should reflect BOS costs supporting the DBOF activity itself (usually included in the G&A cost of the activity). For DBOF activities which are tenants on another installation, total cost of BOS incurred by the tenant activity for itself should be shown on this table. It is recognized that differences exist among DBOF activity groups regarding the costing of base operating support: some groups reflect all such costs only in general and administrative (G&A), while others spread them between G&A and production overhead. Regardless of the costing process, all such costs should be included on Table 1B. The Minor Construction portion of the FY 1996 capital budget should be included on the appropriate line. Military personnel costs (at civilian equivalency rates) should also be included on the appropriate lines of the table. Please ensure that individual lines of the table do not include duplicate costs. Also ensure that there is no duplication between data provided on Table 1A. and 1B. These two tables must be mutually exclusive, since in those cases where both tables are submitted for an activity, the two tables will be added together to estimate total BOS costs at the activity. Add additional lines to the table (following line 21., as necessary, to identify any additional cost elements not currently shown). **Leave shaded areas of table blank.**

Other Notes: All costs of operating the five Major Range Test Facility Bases at DBOF activities (even if direct RDT&E funded) should be included on Table 1B. Weapon Stations should include underutilized plant capacity costs as a DBOF overhead "BOS expense" on Table 1B..

DATA CALL 66
INSTALLATION RESOURCES

Table 1B - Base Operating Support Costs (DBOF Overhead)			
Activity Name: NORU		**UIC:** 39088	
Category	**FY 1996 Net Cost From UC/FUND-4 ($000)**		
	Non-Labor	**Labor**	**Total**
1. Real Property Maintenance Costs:			
1a. Real Property Maintenance (>$15K)	0	0	0
1b. Real Property Maintenance (<$15K)	0	0	0
1c. Minor Construction (Expensed)	0	0	0
1d. Minor Construction (Capital Budget)	0	0	0
1c. Sub-total 1a. through 1d.	0	0	0
2. Other Base Operating Support Costs:	0	0	0
2a. Command Office	0	0	0
2b. ADP Support	0	0	0
2c. Equipment Maintenance	0	0	0
2d. Civilian Personnel Services	0	0	0
2e. Accounting/Finance	0	0	0
2f. Utilities	0	0	0
2g. Environmental Compliance	0	0	0
2h. Police and Fire	0	0	0
2i. Safety	0	0	0
2j. Supply and Storage Operations	0	0	0
2k. Major Range Test Facility Base Costs	0	0	0
2l. Other (Specify)	0	0	0
2m. Sub-total 2a. through 2l:	0	0	0
3. Depreciation	0	0	0
4. Grand Total (sum of 1c., 2m., and 3.) :	0	0	0

DATA CALL 66
INSTALLATION RESOURCES

2. Services/Supplies Cost Data. The purpose of Table 2 is to provide information about projected **FY 1996** costs for the purchase of services and supplies by the activity. **(Note: Unlike Question 1 and Tables 1A and 1B, above, this question is not limited to overhead costs.)** The source for this information, where possible, should be either the NAVCOMPT OP-32 Budget Exhibit for O&M activities or the NAVCOMPT UC/FUND-1/IF-4 exhibit for DBOF activities. Information must reflect FY 1996 budget data supporting the FY 1996 NAVCOMPT Budget Submit. Break out cost data by the major sub-headings identified on the OP-32 or UC/FUND-1/IF-4 exhibit, disregarding the sub-headings on the exhibit which apply to civilian and military salary costs and depreciation. Please note that while the OP-32 exhibit aggregates information by budget activity, this data call requests OP-32 data for the activity responding to the data call. Refer to NAVCOMPTINST 7102.2B of 23 April 1990, Subj: Guidance for the Preparation, Submission and Review of the Department of the Navy (DON) Budget Estimates (DON Budget Guidance Manual) with Changes 1 and 2 for more information on categories of costs identified. Any rows that do not apply to your activity may be left blank. However, totals reported should reflect all costs, exclusive of salary and depreciation.

Table 2 - Services/Supplies Cost Data

Activity Name: NORU	**UIC:** 39088
Cost Category	**FY 1996 Projected Costs ($000)**
Travel:	0
Material and Supplies (including equipment):	0
Industrial Fund Purchases (other DBOF purchases):	0
Transportation:	0
Other Purchases (Contract support, etc.):	0
Total:	0

NOTE: Dollar amounts for this page is included in CNRC HQs OP-32. R

DATA CALL 66
INSTALLATION RESOURCES

3. Contractor Workyears.

a. On-Base Contract Workyear Table. Provide a projected estimate of the number of contract workyears expected to be performed "on base" in support of the installation during FY 1996. Information should represent an annual estimate on a full-time equivalency basis. Several categories of contract support have been identified in the table below. While some of the categories are self-explanatory, please note that the category "mission support" entails management support, labor service and other mission support contracting efforts, e.g., aircraft maintenance, RDT&E support, technical services in support of aircraft and ships, etc.

Table 3 - Contract Workyears	
Activity Name: NORU	**UIC:** 39088
Contract Type	**FY 1996 Estimated Number of Workyears On-Base**
Construction:	0
Facilities Support:	0
Mission Support:	0
Procurement:	0
Other:*	0
Total Workyears:	0

*** Note:** Provide a brief narrative description of the type(s) of contracts, if any, included under the "Other" category.

DATA CALL 66
INSTALLATION RESOURCES

b. Potential Disposition of On-Base Contract Workyears. If the mission/functions of your activity were relocated to another site, what would be the anticipated disposition of the **on-base contract workyears** identified in Table 3.?

1) Estimated number of contract workyears which would be transferred to the receiving site (This number should reflect the number of jobs which would in the future be contracted for at the receiving site, not an estimate of the number of people who would move or an indication that work would necessarily be done by the same contractor(s)):

N/A

2) Estimated number of workyears which would be eliminated:

N/A

3) Estimated number of contract workyears which would remain in place (i.e., contract would remain in place in current location even if activity were relocated outside of the local area):

N/A

DATA CALL 66
INSTALLATION RESOURCES

c. "Off-Base" Contract Workyear Data. Are there any contract workyears located in the local community, but not on-base, which would either be eliminated or relocated if your activity were to be closed or relocated? If so, then provide the following information **(ensure that numbers reported below do not double count numbers included in 3.a. and 3.b., above)**:

No. of Additional Contract Workyears Which Would Be Eliminated	General Type of Work Performed on Contract (e.g., engineering support, technical services, etc.)
0	N/A

No. of Additional Contract Workyears Which Would Be Relocated	General Type of Work Performed on Contract (e.g., engineering support, technical services, etc.)
0	N/A

I certify that the information contained herein is accurate and complete to the best of my knowledge and belief.

NEXT ECHELON LEVEL (if applicable)

NAME (Please type or print

Signature

Title

Date

Activity

I certify that the information contained herein is accurate and complete to the best of my knowledge and belief.

NEXT ECHELON LEVEL (if applicable)

NAME (Please type of print

Signature

Title

Date

Activity

In certify that the information herein is accurate and complete to the best of my knowledge and belief.

MAJOR CLAIMANT LEVEL

FRANK L. BOWMAN, VADM

NAME (Please type or print

Signature

05 AUG 1994.

CHIEF OF NAVAL PERSONNEL

Title

Date

BUREAU OF NAVAL PERSONNEL

Activity

I certify that the information contained herein is accurate and complete to the best of my knowledge belief.

DEPUTY CHIEF OF NAVAL OPERATIONS (LOGISTICS)
DEPUTY CHIEF OF STAFF (INSTALLATIONS & LOGISTICS)

W. A. EARNER

NAME (Please type of print

Signature

8/9/94

Title

Date

BRAC-95 CERTIFICATION

Reference: SECNAV NOTE 11000 dtd 8 Dec 93

In accordance with policy set forth by the Secretary of the Navy, personnel of the Department of the Navy, uniformed and civilian, who provide information for use in the BRAC-95 process are required to provide a signed certification that states "I certify that the information contained herein is accurate and complete to the best of my knowledge and belief."

The signing of this certification constitutes a representation that the certifying official has reviewed the information and either (1) personally vouches for its accuracy and completeness or (2) has possession of, and is relying upon, a certification executed by a competent subordinate.

Each individual in your activity generating information for the BRAC-95 process must certify that information. Enclosure (1) is provided for individual certifications and may be duplicated as necessary. You are directed to maintain those certifications at your activity for audit purposes. For purposes of this certification sheet, the commander of the activity will begin the certification process and each reporting senior in the Chain of Command reviewing the information will also sign this certification sheet. This sheet must remain attached to this package and be forwarded up the Chain of Command. Copies must be retained by each level in the Chain of Command for audit purposes.

I certify the information contained herein is accurate and complete to the best of my knowledge and belief.

ACTIVITY COMMANDER

CW04 K. D. FITE
NAME (Please type of print)

Signature

Deputy Spec Asst for Music (Pers-6MM1)
Title

7/22/94
Date

BUPERS
Activity

Document Separator

Atta
HERRO
CNET
N-4432
7/28/9

DATA CALL 66
INSTALLATION RESOURCES

Activity Information:

Activity Name:	NAVAL EDUCATION AND TRAINING SECURITY ASSISTANCE FIELD ACTIVITY
UIC:	68870
Host Activity Name (if response is for a tenant activity):	N/A
Host Activity UIC:	N/A

General Instructions/Background. A separate response to this data call must be completed for each Department of the Navy (DON) host, independent and tenant activity which separately budgets BOS costs (regardless of appropriation), and, is located in the United States, its territories or possessions.

1. **Base Operating Support (BOS) Cost Data.** Data is required which captures the total annual cost of operating and maintaining Department of the Navy (DON) shore installations. Information must reflect FY 1996 budget data supporting the FY 1996 NAVCOMPT Budget Submit. Two tables are provided. Table 1A identifies "Other than DBOF Overhead" BOS costs and Table 1B identifies "DBOF Overhead" BOS costs. These tables must be completed, as appropriate, for all DON host, independent or tenant activities which separately budget BOS costs (regardless of appropriation), and, are located in the United States, its territories or possessions. Responses for DBOF activities may need to include both Table 1A and 1B to ensure that all BOS costs, including those incurred by the activity in support of tenants, are identified. If both table 1A and 1B are submitted for a single DON activity, please ensure that no data is double counted (that is, included on both Table 1A and 1B). The following tables are designed to collect all BOS costs currently budgeted, regardless of appropriation, e.g., Operations and Maintenance, Research and Development, Military Personnel, etc. Data must reflect FY 1996 and should be reported in thousands of dollars.

a. **Table 1A - Base Operating Support Costs (Other Than DBOF Overhead).** This Table should be completed to identify "Other Than DBOF Overhead" Costs. Display, in the format shown on the table, the O&M, R&D and MPN resources currently budgeted for BOS services. O&M cost data must be consistent with data provided on the BS-1 exhibit. Report only direct funding for the activity. Host activities should not include reimbursable support provided to tenants, since tenants will be separately reporting these costs. Military personnel costs should be included on the appropriate lines of the table. Please ensure that individual lines of the table do not include duplicate costs. Add additional lines to the table (following line 2j., as necessary, to identify any additional cost elements not currently shown). **Leave shaded areas of table blank.**

AOA
HEARING
CASE
N-4432
7/28/94

DATA CALL 66
INSTALLATION RESOURCES

NOT APPLICABLE- NO BASE OPS FUNDING ALLOCATED TO THIS ACTIVITY

Table 1A - Base Operating Support Costs (Other Than DBOF Overhead)			
Activity Name:		UIC:	
Category	FY 1996 BOS Costs ($000)		
	Non-Labor	Labor	Total
1. Real Property Maintenance Costs:			
1a. Maintenance and Repair			
1b. Minor Construction			
1c. Sub-total 1a. and 1b.			
2. Other Base Operating Support Costs:			
2a. Utilities			
2b. Transportation			
2c. Environmental			
2d. Facility Leases			
2e. Morale, Welfare & Recreation			
2f. Bachelor Quarters			
2g. Child Care Centers			
2h. Family Service Centers			
2i. Administration			
2j. Other (Specify)			
2k. Sub-total 2a. through 2j:			
3. Grand Total (sum of 1c. and 2k.):			

DATA CALL 66
INSTALLATION RESOURCES

b. **Funding Source.** If data shown on Table 1A reflects more than one appropriation, then please provide a break out of the total shown for the "3. Grand-Total" line, by appropriation:

Appropriation	Amount ($000)

NOT APPLICABLE - NO BASE OPS FUNDING ALLOCATED TO THIS ACTIVITY

c. **Table 1B - Base Operating Support Costs (DBOF Overhead).** This Table should be submitted for all current DBOF activities. Costs reported should reflect BOS costs supporting the DBOF activity itself (usually included in the G&A cost of the activity). For DBOF activities which are tenants on another installation, total cost of BOS incurred by the tenant activity for itself should be shown on this table. It is recognized that differences exist among DBOF activity groups regarding the costing of base operating support: some groups reflect all such costs only in general and administrative (G&A), while others spread them between G&A and production overhead. Regardless of the costing process, all such costs should be included on Table 1B. The Minor Construction portion of the FY 1996 capital budget should be included on the appropriate line. Military personnel costs (at civilian equivalency rates) should also be included on the appropriate lines of the table. Please ensure that individual lines of the table do not include duplicate costs. Also ensure that there is no duplication between data provided on Table 1A. and 1B. These two tables must be mutually exclusive, since in those cases where both tables are submitted for an activity, the two tables will be added together to estimate total BOS costs at the activity. Add additional lines to the table (following line 21., as necessary, to identify any additional cost elements not currently shown). **Leave shaded areas of table blank.**

Other Notes: All costs of operating the five Major Range Test Facility Bases at DBOF activities (even if direct RDT&E funded) should be included on Table 1B. Weapon Stations should include underutilized plant capacity costs as a DBOF overhead "BOS expense" on Table 1B..

NOT APPLICABLE - NOT A DBOF ACTIVITY

DATA CALL 66
INSTALLATION RESOURCES

Table 1B - Base Operating Support Costs (DBOF Overhead)			
Activity Name:		**UIC:**	
Category	**FY 1996 Net Cost From UC/FUND-4 ($000)**		
	Non-Labor	**Labor**	**Total**
1. Real Property Maintenance Costs:			
1a. Real Property Maintenance (>$15K)			
1b. Real Property Maintenance (<$15K)			
1c. Minor Construction (Expensed)			
1d. Minor Construction (Capital Budget)			
1c. Sub-total 1a. through 1d.			
2. Other Base Operating Support Costs:			
2a. Command Office			
2b. ADP Support			
2c. Equipment Maintenance			
2d. Civilian Personnel Services			
2e. Accounting/Finance			
2f. Utilities			
2g. Environmental Compliance			
2h. Police and Fire			
2i. Safety			
2j. Supply and Storage Operations			
2k. Major Range Test Facility Base Costs			
2l. Other (Specify)			
2m. Sub-total 2a. through 2l:			
3. Depreciation			
4. Grand Total (sum of 1c., 2m., and 3.) :			

AOA
HEARD
CAST
N-4432
7/28/

DATA CALL 66
INSTALLATION RESOURCES

2. Services/Supplies Cost Data. The purpose of Table 2 is to provide information about projected FY 1996 costs for the purchase of services and supplies by the activity. **(Note: Unlike Question 1 and Tables 1A and 1B, above, this question is not limited to overhead costs.)** The source for this information, where possible, should be either the NAVCOMPT OP-32 Budget Exhibit for O&M activities or the NAVCOMPT UC/FUND-1/IF-4 exhibit for DBOF activities. Information must reflect FY 1996 budget data supporting the FY 1996 NAVCOMPT Budget Submit. Break out cost data by the major sub-headings identified on the OP-32 or UC/FUND-1/IF-4 exhibit, disregarding the sub-headings on the exhibit which apply to civilian and military salary costs and depreciation. Please note that while the OP-32 exhibit aggregates information by budget activity, this data call requests OP-32 data for the activity responding to the data call. Refer to NAVCOMPTINST 7102.2B of 23 April 1990, Subj: Guidance for the Preparation, Submission and Review of the Department of the Navy (DON) Budget Estimates (DON Budget Guidance Manual) with Changes 1 and 2 for more information on categories of costs identified. Any rows that do not apply to your activity may be left blank. However, totals reported should reflect all costs, exclusive of salary and depreciation.

SEE PAGE 5A

Table 2 - Services/Supplies Cost Data	
Activity Name:	**UIC:**
Cost Category	**FY 1996 Projected Costs ($000)**
Travel:	
Material and Supplies (including equipment):	
Industrial Fund Purchases (other DBOF purchases):	
Transportation:	
Other Purchases (Contract support, etc.):	
Total:	

DATA CALL 66
INSTALLATION RESOURCES

Table 2 - Services/Supplies Cost Data	
Activity Name: NETSAFA	UIC: 68870
Cost Category	**FY 1996 Projected Costs ($000)**
Travel:	
Material and Supplies (including equipment):	
Industrial Fund Purchjases (other DBOF purchases):	
Transportation:	
Other Purchases (Contract support, etc.):	654
Total:	654

Enclosure (1)

Ans
HEAPP
CNET
N-4 [illegible]
7/28/94

DATA CALL 66
INSTALLATION RESOURCES

3. Contractor Workyears.

a. On-Base Contract Workyear Table. Provide a projected estimate of the number of contract workyears expected to be performed "on base" in support of the installation during FY 1996. Information should represent an annual estimate on a full-time equivalency basis. Several categories of contract support have been identified in the table below. While some of the categories are self-explanatory, please note that the category "mission support" entails management support, labor service and other mission support contracting efforts, e.g., aircraft maintenance, RDT&E support, technical services in support of aircraft and ships, etc.

Table 3 - Contract Workyears	
Activity Name: NETSAFA	**UIC:**68870
Contract Type	**FY 1996 Estimated Number of Workyears On-Base**
Construction:	0
Facilities Support:	0
Mission Support:	0
Procurement:	0
Other:*	0
Total Workyears:	N/A 0

*** Note:** Provide a brief narrative description of the type(s) of contracts, if any, included under the "Other" category.

Art A
Hearn
CNET
N-443
7/28/

DATA CALL 66
INSTALLATION RESOURCES

b. **Potential Disposition of On-Base Contract Workyears.** If the mission/functions of your activity were relocated to another site, what would be the anticipated disposition of the **on-base contract workyears** identified in Table 3.?

1) Estimated number of contract workyears which would be transferred to the receiving site (This number should reflect the number of jobs which would in the future be contracted for at the receiving site, not an estimate of the number of people who would move or an indication that work would necessarily be done by the same contractor(s)):

N/A

2) Estimated number of workyears which would be eliminated:

N/A

3) Estimated number of contract workyears which would remain in place (i.e., contract would remain in place in current location even if activity were relocated outside of the local area):

N/A

AMA HEARD CNET N-44 7/28/

DATA CALL 66
INSTALLATION RESOURCES

c. **"Off-Base" Contract Workyear Data.** Are there any contract workyears located in the local community, but not on-base, which would either be eliminated or relocated if your activity were to be closed or relocated? If so, then provide the following information (**ensure that numbers reported below do not double count numbers included in 3.a. and 3.b., above**):

ACTIVITY NAME: NETSAFA UIC: 68870

No. of Additional Contract Workyears Which Would Be Eliminated	General Type of Work Performed on Contract (e.g., engineering support, technical services, etc.)
N/A	N/A

No. of Additional Contract Workyears Which Would Be Relocated	General Type of Work Performed on Contract (e.g., engineering support, technical services, etc.)
N/A	N/A

Activity Name: NETSAFA UIC: 68870

DATA CALL 66
INSTALLATION RESOURCES

b. Potential Disposition of On-Base Contract Workyears. If the mission/functions of your activity were relocated to another site, what would be the anticipated disposition of the on-base contract workyears identified in Table 3.?

1) Estimated number of contract workyears which would be transferred to the receiving site (This number should reflect the number of jobs which would in the future be contracted for at the receiving site, not an estimate of the number of people who would move or an indication that work would necessarily be done by the same contractor(s)):

N/A

2) Estimated number of workyears which would be eliminated:

N/A

3) Estimated number of contract workyears which would remain in place (i.e., contract would remain in place in current location even if activity were relocated outside of the local area):

N/A

DATA CALL 66
INSTALLATION RESOURCES

c. **"Off-Base" Contract Workyear Data.** Are there any contract workyears located in the local community, but not on-base, which would either be eliminated or relocated if your activity were to be closed or relocated? If so, then provide the following information (**ensure that numbers reported below do not double count numbers included in 3.a. and 3.b., above**):

Activity Name: NETSAFA UIC: 68870

No. of Additional Contract Workyears Which Would Be Eliminated	General Type of Work Performed on Contract (e.g., engineering support, technical services, etc.)
N/A	N/A

No. of Additional Contract Workyears Which Would Be Relocated	General Type of Work Performed on Contract (e.g., engineering support, technical services, etc.)
N/A	N/A

Command: NETSAFA

Data Call Number Sixty-Six

I certify that the information contained herein is accurate and complete to the best of my knowledge and belief.

MAJOR CLAIMANT LEVEL

T. J. BARRY
NAME

Signature

Acting
Title

28 July 94
Date

CNET
Activity

I certify that the information contained herein is accurate and complete to the best of my knowledge and belief.

DEPUTY CHIEF OF NAVAL OPERATIONS (LOGISTICS)
DEPUTY CHIEF OF STAFF (INSTALLATIONS & LOGISTICS)

W. A. EARNER
NAME

Signature

Title

8/7/94
Date

BRAC-95 CERTIFICATION

I certify the information contained herein is accurate and complete to the best of my knowledge and belief.

ACTIVITY COMMANDER

W. H. FOULK
Name (Please type or print)

W. H. Foulk
Signature

Acting NETSAFA
Title

7-26-94
Date

NETSAFA
Activity

DATA CALL 66
INSTALLATION RESOURCES

3. Contractor Workyears.

a. **On-Base Contract Workyear Table.** Provide a projected estimate of the number of contract workyears expected to be performed "on base" in support of the installation during FY 1996. Information should represent an annual estimate on a full-time equivalency basis. Several categories of contract support have been identified in the table below. While some of the categories are self-explanatory, please note that the category "mission support" entails management support, labor service and other mission support contracting efforts, e.g., aircraft maintenance, RDT&E support, technical services in support of aircraft and ships, etc.

Table 3 - Contract Workyears

Activity Name: NETSAFA	UIC: 68870
Contract Type	**FY 1996 Estimated Number of Workyears On-Base**
Construction:	0
Facilities Support:	0
Mission Support:	0
Procurement:	0
Other:*	0
Total Workyears:	N/A 0

* Note: Provide a brief narrative description of the type(s) of contracts, if any, included under the "Other" category.

Post-It™ brand fax transmittal memo 7671 | # of pages ▸

To CNET	From NETSAFA
Co. Cathy Rinaldson	Co. Grace Sullivan
Dept.	Phone # 452-2931
Fax # 2-4646	Fax # 2-2953

Document Separator

DATA CALL 66
INSTALLATION RESOURCES

Activity Information:

Activity Name:	CHIEF OF NAVAL EDUCATION AND TRAINING
UIC:	000620
Host Activity Name (if response is for a tenant activity):	NAVAL AIR STATION PENSACOLA
Host Activity UIC:	00204

General Instructions/Background. A separate response to this data call must be completed for each Department of the Navy (DON) host, independent and tenant activity which separately budgets BOS costs (regardless of appropriation), and, is located in the United States, its territories or possessions.

1. Base Operating Support (BOS) Cost Data. Data is required which captures the total annual cost of operating and maintaining Department of the Navy (DON) shore installations. Information must reflect FY 1996 budget data supporting the FY 1996 NAVCOMPT Budget Submit. Two tables are provided. Table 1A identifies "Other than DBOF Overhead" BOS costs and Table 1B identifies "DBOF Overhead" BOS costs. These tables must be completed, as appropriate, for all DON host, independent or tenant activities which separately budget BOS costs (regardless of appropriation), and, are located in the United States, its territories or possessions. Responses for DBOF activities may need to include both Table 1A and 1B to ensure that all BOS costs, including those incurred by the activity in support of tenants, are identified. If both table 1A and 1B are submitted for a single DON activity, please ensure that no data is double counted (that is, included on both Table 1A and 1B). The following tables are designed to collect all BOS costs currently budgeted, regardless of appropriation, e.g., Operations and Maintenance, Research and Development, Military Personnel, etc. Data must reflect FY 1996 and should be reported in thousands of dollars.

a. Table 1A - **Base Operating Support Costs (Other Than DBOF Overhead).** This Table should be completed to identify "Other Than DBOF Overhead" Costs. Display, in the format shown on the table, the O&M, R&D and MPN resources currently budgeted for BOS services. O&M cost data must be consistent with data provided on the BS-1 exhibit. Report only direct funding for the activity. Host activities should not include reimbursable support provided to tenants, since tenants will be separately reporting these costs. Military personnel costs should be included on the appropriate lines of the table. Please ensure that individual lines of the table do not include duplicate costs. Add additional lines to the table (following line 2j., as necessary, to identify any additional cost elements not currently shown). **Leave shaded areas of table blank.**

DATA CALL 66
INSTALLATION RESOURCES

Table 1A - Base Operating Support Costs (Other Than DBOF Overhead)			
Activity Name: CNET		UIC:00062	
Category	FY 1996 BOS Costs ($000)		
	Non-Labor	Labor	Total
1. Real Property Maintenance Costs:			
1a. Maintenance and Repair	0	0	0
1b. Minor Construction	0	0	0
1c. Sub-total 1a. and 1b.	0	0	0
2. Other Base Operating Support Costs:			
2a. Utilities	107	0	107
2b. Transportation	0	0	0
2c. Environmental	0	0	0
2d. Facility Leases	0	0	0
2e. Morale, Welfare & Recreation	0	0	0
2f. Bachelor Quarters	0	0	0
2g. Child Care Centers	0	0	0
2h. Family Service Centers	0	0	0
2i. Administration	0	0	0
2j. Other (Specify)	390	0	390
2k. Sub-total 2a. through 2j:	497	0	497
3. Grand Total (sum of 1c. and 2k.):	497	0	497

DATA CALL 66
INSTALLATION RESOURCES

b. **Funding Source.** If data shown on Table 1A reflects more than one appropriation, then please provide a break out of the total shown for the "3. Grand-Total" line, by appropriation:

Appropriation	Amount ($000)
O&MN	497
MPN	000

c. **Table 1B - Base Operating Support Costs (DBOF Overhead).** This Table should be submitted for all current DBOF activities. Costs reported should reflect BOS costs supporting the DBOF activity itself (usually included in the G&A cost of the activity). For DBOF activities which are tenants on another installation, total cost of BOS incurred by the tenant activity for itself should be shown on this table. It is recognized that differences exist among DBOF activity groups regarding the costing of base operating support: some groups reflect all such costs only in general and administrative (G&A), while others spread them between G&A and production overhead. Regardless of the costing process, all such costs should be included on Table 1B. The Minor Construction portion of the FY 1996 capital budget should be included on the appropriate line. Military personnel costs (at civilian equivalency rates) should also be included on the appropriate lines of the table. Please ensure that individual lines of the table do not include duplicate costs. Also ensure that there is no duplication between data provided on Table 1A. and 1B. These two tables must be mutually exclusive, since in those cases where both tables are submitted for an activity, the two tables will be added together to estimate total BOS costs at the activity. Add additional lines to the table (following line 21., as necessary, to identify any additional cost elements not currently shown). **Leave shaded areas of table blank.**

Other Notes: All costs of operating the five Major Range Test Facility Bases at DBOF activities (even if direct RDT&E funded) should be included on Table 1B. Weapon Stations should include underutilized plant capacity costs as a DBOF overhead "BOS expense" on Table 1B..

NOT APPLICABLE - NOT A DBOF ACTIVITY

DATA CALL 66
INSTALLATION RESOURCES

Table 1B - Base Operating Support Costs (DBOF Overhead)			
Activity Name: CNET		UIC: 00062	
Category	FY 1996 Net Cost From UC/FUND-4 ($000)		
	Non-Labor	Labor	Total
1. Real Property Maintenance Costs:			
1a. Real Property Maintenance (>$15K)			
1b. Real Property Maintenance (<$15K)			
1c. Minor Construction (Expensed)			
1d. Minor Construction (Capital Budget)			
1c. Sub-total 1a. through 1d.			
2. Other Base Operating Support Costs:			
2a. Command Office			
2b. ADP Support			
2c. Equipment Maintenance			
2d. Civilian Personnel Services			
2e. Accounting/Finance			
2f. Utilities			
2g. Environmental Compliance			
2h. Police and Fire			
2i. Safety			
2j. Supply and Storage Operations			
2k. Major Range Test Facility Base Costs			
2l. Other (Specify)			
2m. Sub-total 2a. through 2l:			
3. Depreciation			
4. Grand Total (sum of 1c., 2m., and 3.) :			

2. <u>Services/Supplies Cost Data</u>. The purpose of Table 2 is to provide information about projected FY 1996 costs for the purchase of services and supplies by the activity. (Note: Unlike Question 1 and Tables 1A and 1B, above, this question is

not limited to overhead costs.) The source for this information, where possible, should be either the NAVCOMPT OP-32 Budget Exhibit for O&M activities or the NAVCOMPT UC/FUND-1/IF-4 exhibit for DBOF activities. Information must reflect FY 1996 budget data supporting the FY 1996 NAVCOMPT Budget Submit. Break out cost data by the major sub-headings identified on the OP-32 or UC/FUND-1/IF-4 exhibit, disregarding the sub-headings on the exhibit which apply to civilian and military salary costs and depreciation. Please note that while the OP-32 exhibit aggregates information by budget activity, this data call requests OP-32 data for the activity responding to the data call. Refer to NAVCOMPTINST 7102.2B of 23 April 1990, Subj: Guidance for the Preparation, Submission and Review of the Department of the Navy (DON) Budget Estimates (DON Budget Guidance Manual) with Changes 1 and 2 for more information on categories of costs identified. Any rows that do not apply to your activity may be left blank. However, totals reported should reflect all costs, exclusive of salary and depreciation.

Table 2 - Services/Supplies Cost Data

Activity Name: CNET	UIC:00062
Cost Category	**FY 1996 Projected Costs ($000)**
Travel:	1,039
Material and Supplies (including equipment):	476
Industrial Fund Purchases (other DBOF purchases):	0
Transportation:	0
Other Purchases (Contract support, etc.):	303
Total:	1,818

DATA CALL 66
INSTALLATION RESOURCES

3. Contractor Workyears.

a. **On-Base Contract Workyear Table.** Provide a projected estimate of the number of contract workyears expected to be performed "on base" in support of the installation during FY 1996. Information should represent an annual estimate on a full-time equivalency basis. Several categories of contract support have been identified in the table below. While some of the categories are self-explanatory, please note that the category "mission support" entails management support, labor service and other mission support contracting efforts, e.g., aircraft maintenance, RDT&E support, technical services in support of aircraft and ships, etc.

Table 3 - Contract Workyears	
Activity Name: CNET	**UIC:00062**
Contract Type	**FY 1996 Estimated Number of Workyears On-Base**
Construction:	0
Facilities Support:	0
Mission Support:	2
Procurement:	0
Other:*	4
Total Workyears:	6

*** Note:** Provide a brief narrative description of the type(s) of contracts, if any, included under the "Other" category.

b. Potential Disposition of On-Base Contract Workyears. If the mission/functions of your activity were relocated to another site, what would be the anticipated disposition of the on-base contract workyears identified in Table 3.?

1) Estimated number of contract workyears which would be transferred to the receiving site (This number should reflect the number of jobs which would in the future be contracted for at the receiving site, not an estimate of the number of people who would move or an indication that work would necessarily be done by the same contractor(s)):

6

2) Estimated number of workyears which would be eliminated:

0

3) Estimated number of contract workyears which would remain in place (i.e., contract would remain in place in current location even if activity were relocated outside of the local area):

0

DATA CALL 66
INSTALLATION RESOURCES

c. **"Off-Base" Contract Workyear Data.** Are there any contract workyears located in the local community, but not on-base, which would either be eliminated or relocated if your activity were to be closed or relocated? If so, then provide the following information (**ensure that numbers reported below do not double count numbers included in 3.a. and 3.b., above**):

No. of Additional Contract Workyears Which Would Be Eliminated	General Type of Work Performed on Contract (e.g., engineering support, technical services, etc.)
0	

No. of Additional Contract Workyears Which Would Be Relocated	General Type of Work Performed on Contract (e.g., engineering support, technical services, etc.)
0	

Command: **CNET**

Data Call Number Sixty-Six

I certify that the information contained herein is accurate and complete to the best of my knowledge and belief.

MAJOR CLAIMANT LEVEL

T. J. BARRY
NAME

Signature

Acting
Title

28 July 94
Date

CNET
Activity

I certify that the information contained herein is accurate and complete to the best of my knowledge and belief.

DEPUTY CHIEF OF NAVAL OPERATIONS (LOGISTICS)
DEPUTY CHIEF OF STAFF (INSTALLATIONS & LOGISTICS)

W. A. EARNER
NAME

Signature

Title

8/9/94
Date

Document Separator

228

DATA CALL 66
INSTALLATION RESOURCES

Activity Information:

Activity Name:	Naval Legal Service Office Central
UIC:	68366
Host Activity Name (if response is for a tenant activity):	Naval Air Station Pensacola FL
Host Activity UIC:	00204

General Instructions/Background. A separate response to this data call must be completed for each Department of the Navy (DON) host, independent and tenant activity which separately budgets BOS costs (regardless of appropriation), and, is located in the United States, its territories or possessions.

1. **Base Operating Support (BOS) Cost Data.** Data is required which captures the total annual cost of operating and maintaining Department of the Navy (DON) shore installations. Information must reflect FY 1996 budget data supporting the FY 1996 NAVCOMPT Budget Submit. Two tables are provided. Table 1A identifies "Other than DBOF Overhead" BOS costs and Table 1B identifies "DBOF Overhead" BOS costs. These tables must be completed, as appropriate, for all DON host, independent or tenant activities which separately budget BOS costs (regardless of appropriation), and, are located in the United States, its territories or possessions. Responses for DBOF activities may need to include both Table 1A and 1B to ensure that all BOS costs, including those incurred by the activity in support of tenants, are identified. If both table 1A and 1B are submitted for a single DON activity, please ensure that no data is double counted (that is, included on both Table 1A and 1B). The following tables are designed to collect all BOS costs currently budgeted, regardless of appropriation, e.g., Operations and Maintenance, Research and Development, Military Personnel, etc. Data must reflect FY 1996 and should be reported in thousands of dollars.

a. **Table 1A - Base Operating Support Costs (Other Than DBOF Overhead).** This Table should be completed to identify "Other Than DBOF Overhead" Costs. Display, in the format shown on the table, the O&M, R&D and MPN resources currently budgeted for BOS services. O&M cost data must be consistent with data provided on the BS-1 exhibit. Report only direct funding for the activity. Host activities should not include reimbursable support provided to tenants, since tenants will be separately reporting these costs. Military personnel costs should be included on the appropriate lines of the table. Please ensure that individual lines of the table do not include duplicate costs. Add additional lines to the table (following line 2j., as necessary, to identify any additional cost elements not currently shown). **Leave shaded areas of table blank.**

DATA CALL 66
INSTALLATION RESOURCES

Table 1A - Base Operating Support Costs (Other Than DBOF Overhead)			
Activity Name: Naval Legal Service Office Central		**UIC: 68366**	
Category	**FY 1996 BOS Costs ($000)**		
	Non-Labor	**Labor**	**Total**
1. Real Property Maintenance Costs:			
1a. Maintenance and Repair	45		45
1b. Minor Construction			
1c. Sub-total 1a. and 1b.	45		45
2. Other Base Operating Support Costs:			
2a. Utilities	36.6		36.6
2b. Transportation			
2c. Environmental			
2d. Facility Leases			
2e. Morale, Welfare & Recreation			
2f. Bachelor Quarters			
2g. Child Care Centers			
2h. Family Service Centers			
2i. Administration			
2j. Other (Specify) Oth Eng Supp/Comm	31.6		31.6
2k. Sub-total 2a. through 2j:	68.2		68.2
3. Grand Total (sum of 1c. and 2k.):	113.2		113.2

DATA CALL 66
INSTALLATION RESOURCES

b. Funding Source. If data shown on Table 1A reflects more than one appropriation, then please provide a break out of the total shown for the "3. Grand-Total" line, by appropriation:

Appropriation	Amount ($000)
O&M,N	113.2

c. Table 1B - Base Operating Support Costs (DBOF Overhead). This Table should be submitted for all current DBOF activities. Costs reported should reflect BOS costs supporting the DBOF activity itself (usually included in the G&A cost of the activity). For DBOF activities which are tenants on another installation, total cost of BOS incurred by the tenant activity for itself should be shown on this table. It is recognized that differences exist among DBOF activity groups regarding the costing of base operating support: some groups reflect all such costs only in general and administrative (G&A), while others spread them between G&A and production overhead. Regardless of the costing process, all such costs should be included on Table 1B. The Minor Construction portion of the FY 1996 capital budget should be included on the appropriate line. Military personnel costs (at civilian equivalency rates) should also be included on the appropriate lines of the table. Please ensure that individual lines of the table do not include duplicate costs. Also ensure that there is no duplication between data provided on Table 1A. and 1B. These two tables must be mutually exclusive, since in those cases where both tables are submitted for an activity, the two tables will be added together to estimate total BOS costs at the activity. Add additional lines to the table (following line 21., as necessary, to identify any additional cost elements not currently shown). **Leave shaded areas of table blank.**

Other Notes: All costs of operating the five Major Range Test Facility Bases at DBOF activities (even if direct RDT&E funded) should be included on Table 1B. Weapon Stations should include underutilized plant capacity costs as a DBOF overhead "BOS expense" on Table 1B..

DATA CALL 66
INSTALLATION RESOURCES

Table 1B - Base Operating Support Costs (DBOF Overhead)			
Activity Name: Naval Legal Service Office Central		**UIC: 68366**	
Category	**FY 1996 Net Cost From UC/FUND-4 ($000)**		
	Non-Labor	**Labor**	**Total**
1. Real Property Maintenance Costs:			
1a. Real Property Maintenance (>$15K)	0	0	0
1b. Real Property Maintenance (<$15K)	0	0	0
1c. Minor Construction (Expensed)	0	0	0
1d. Minor Construction (Capital Budget)	0	0	0
1c. Sub-total 1a. through 1d.	0	0	0
2. Other Base Operating Support Costs:			
2a. Command Office	0	0	0
2b. ADP Support	0	0	0
2c. Equipment Maintenance	0	0	0
2d. Civilian Personnel Services	0	0	0
2e. Accounting/Finance	0	0	0
2f. Utilities	0	0	0
2g. Environmental Compliance	0	0	0
2h. Police and Fire	0	0	0
2i. Safety	0	0	0
2j. Supply and Storage Operations	0	0	0
2k. Major Range Test Facility Base Costs	0	0	0
2l. Other (Specify)	0	0	0
2m. Sub-total 2a. through 2l:	0	0	0
3. Depreciation	0	0	0
4. Grand Total (sum of 1c., 2m., and 3.) :	0	0	0

DATA CALL 66
INSTALLATION RESOURCES

2. Services/Supplies Cost Data. The purpose of Table 2 is to provide information about projected **FY 1996** costs for the purchase of services and supplies by the activity. **(Note: Unlike Question 1 and Tables 1A and 1B, above, this question is not limited to overhead costs.)** The source for this information, where possible, should be either the NAVCOMPT OP-32 Budget Exhibit for O&M activities or the NAVCOMPT UC/FUND-1/IF-4 exhibit for DBOF activities. Information must reflect FY 1996 budget data supporting the FY 1996 NAVCOMPT Budget Submit. Break out cost data by the major sub-headings identified on the OP-32 or UC/FUND-1/IF-4 exhibit, disregarding the sub-headings on the exhibit which apply to civilian and military salary costs and depreciation. Please note that while the OP-32 exhibit aggregates information by budget activity, this data call requests OP-32 data for the activity responding to the data call. Refer to NAVCOMPTINST 7102.2B of 23 April 1990, Subj: Guidance for the Preparation, Submission and Review of the Department of the Navy (DON) Budget Estimates (DON Budget Guidance Manual) with Changes 1 and 2 for more information on categories of costs identified. Any rows that do not apply to your activity may be left blank. However, totals reported should reflect all costs, exclusive of salary and depreciation.

Table 2 - Services/Supplies Cost Data

Activity Name: Naval Legal Service Office Central	**UIC: 68366**
Cost Category	**FY 1996 Projected Costs ($000)**
Travel:	22.6
Material and Supplies (including equipment):	17.6
Industrial Fund Purchases (other DBOF purchases):	113.2
Transportation:	1.6
Other Purchases (Contract support, etc.):	5.9
Total:	160.9

DATA CALL 66
INSTALLATION RESOURCES

3. Contractor Workyears.

a. On-Base Contract Workyear Table. Provide a projected estimate of the number of contract workyears expected to be **performed "on base"** in support of the installation during FY 1996. Information should represent an annual estimate on a full-time equivalency basis. Several categories of contract support have been identified in the table below. While some of the categories are self-explanatory, please note that the category "mission support" entails management support, labor service and other mission support contracting efforts, e.g., aircraft maintenance, RDT&E support, technical services in support of aircraft and ships, etc.

Table 3 - Contract Workyears	
Activity Name: Naval Legal Service Office Central	**UIC: 68366**
Contract Type	**FY 1996 Estimated Number of Workyears On-Base**
Construction:	0
Facilities Support:	0
Mission Support:	0
Procurement:	0
Other:*	0
Total Workyears:	0

* **Note:** Provide a brief narrative description of the type(s) of contracts, if any, included under the "Other" category.

DATA CALL 66
INSTALLATION RESOURCES

b. Potential Disposition of On-Base Contract Workyears. If the mission/functions of your activity were relocated to another site, what would be the anticipated disposition of the **on-base contract workyears** identified in Table 3.?

1) Estimated number of contract workyears which would be transferred to the receiving site (This number should reflect the number of jobs which would in the future be contracted for at the receiving site, not an estimate of the number of people who would move or an indication that work would necessarily be done by the same contractor(s)):

N/A

2) Estimated number of workyears which would be eliminated:

N/A

3) Estimated number of contract workyears which would remain in place (i.e., contract would remain in place in current location even if activity were relocated outside of the local area):

N/A

DATA CALL 66
INSTALLATION RESOURCES

c. **"Off-Base" Contract Workyear Data.** Are there any contract workyears located in the local community, but not on-base, which would either be eliminated or relocated if your activity were to be closed or relocated? If so, then provide the following information **(ensure that numbers reported below do not double count numbers included in 3.a. and 3.b., above):**

No. of Additional Contract Workyears Which Would Be Eliminated	General Type of Work Performed on Contract (e.g., engineering support, technical services, etc.)
N/A	

No. of Additional Contract Workyears Which Would Be Relocated	General Type of Work Performed on Contract (e.g., engineering support, technical services, etc.)
N/A	

BRAC-95 CERTIFICATION

Reference: SECNAVNOTE 11000 of 08 December 1993

In accordance with policy set forth by the Secretary of the Navy, personnel of the Department of the Navy, uniformed and civilian, who provide information for use in the BRAC-95 process are required to provide a signed certification that states "I certify that the information contained herein is accurate and complete to the best of my knowledge and belief."

The signing of this certification constitutes a representation that the certifying official has reviewed the information and either (1) personally vouches for its accuracy and completeness or (2) has possession of, and is relying upon, a certification executed by a competent subordinate.

Each individual in your activity generating information for the BRAC-95 process must certify that information. Enclosure (1) is provided for individual certifications and may be duplicated as necessary. You are directed to maintain those certifications at your activity for audit purposes. For purposes of this certification sheet, the commander of the activity will begin the certification process and each reporting senior in the Chain of Command reviewing the information will also sign this certification sheet. This sheet must remain attached to this package and be forwarded up the Chain of Command. Copies must be retained by each level in the Chain of Command for audit purposes.

I certify that the information contained herein is accurate and complete to the best of my knowledge and belief.

ACTIVITY COMMANDER

C. M. Legrand, RADM, JAGC
NAME (Please type or print)

Signature

Commander, NAVLEGSVCCOM
Title

18 July 94
Date

Naval Legal Service Command
Activity

I certify that the information contained herein is accurate and complete to the best of my knowledge and belief.

NEXT ECHELON LEVEL (if applicable)

NAME (Please type or print) _____ Signature _____

Title _____ Date _____

Activity _____

I certify that the information contained herein is accurate and complete to the best of my knowledge and belief.

NEXT ECHELON LEVEL (if applicable)

NAME (Please type or print) _____ Signature _____

Title _____ Date _____

Activity _____

I certify that the information contained herein is accurate and complete to the best of my knowledge and belief.

MAJOR CLAIMANT LEVEL

Mr. Robert W. Thornett
NAME (Please type or print)

Signature

Director
Title

8/2/94
Date

Field Support Activity
Activity

I certify that the information contained herein is accurate and complete to the best of my knowledge and belief.

DEPUTY CHIEF OF NAVAL OPERATIONS (LOGISTICS)
DEPUTY CHIEF OF STAFF (INSTALLATIONS & LOGISTICS)

J. B. GREENE, JR.
NAME (Please type or print)

Signature

ACTING
Title

22 AUG 1994
Date

Document Separator

URBAN AREA LAND USE REGULATIONS

ESCAMBIA COUNTY, FLORIDA

ORDINANCE NO. 89-27

NAS PENSACOLA
BRAC95
DATA CALL 20

FEATURES AND CAPABILITIES
B. ENCROACHMENT
QUESTION 8.B

ATTACHMENT 1

Single-Family Residential and Mobile Homes (ord. 89-27)

ZONE	FS	SS	RS	MAX LOT	LOT WIDTH	BLDG. HEIGHT
R-1	25'	10%(15)*	25'*	30%	80' FBL 50' STREET 20' CUL-DE-SAC	2.5 STORIES OR 35' ABOVE HABITABLE LVL.
R-2	25'	10%(15)*	25'*	30%	70' FBL 50' STREET 20' CUL-DE-SAC	2.5 STORIES OR 35' ABOVE HABITABLE LVL.
R-3	25'	10%(15)*	25'*	30%	50' FBL 40' STREET 20' CUL-DE-SAC	2.5 STORIES OR 35' ABOVE HABITABLE LVL.
R-4	25'	10%(10)*	25'*	1-2 40% 3-4 35% 5-6 30% 7-9 25% 10-13 17% > 13 15%	50' FBL 40' STREET 20' CUL-DE-SAC	N/A
R-5	25'	10%(10)x+*	25'*	1-2 45% 3-4 40% 5-6 35% 7-9 30% 10-13 25% > 13 20%	50' FBL 40' STREET 20' CUL-DE-SAC	N/A
R-6	25'	10%(10)x+*	25'*	1-2 50% 3-4 45% 5-6 40% 7-9 35% 10-13 30% > 13 25%	N/A	N/A
C-1/2	25'	10%(10)x+*	25'*	1-2 45% 3-4 40% 5-6 35% 7-9 30% 10-13 25% > 13 20%	50' FBL 40' STREET 20' CUL-DE-SAC	N/A
R-R	40'	10%(15)**	40'**	30%	100' FBL (MINIMUM: .5 ACRE)	N/A
AG	40'	10%(15)**	40'**	30%	100' ST. (MINIMUM: 1.5 ACRE)	N/A
SDD	25'	10%(15)*	25'*	30%	80' FBL	N/A
PUD	20'	10%(10)x+*	20'x+*	1-2 40% 3-4 35% 5-6 30% 7-9 25% 10-13 17% > 13 15%	N/A	N/A
AP-A	40'	10%(15)**	40'**	30%	100' FBL	SEE SEC 16, PART IV
AP-B,B1-3,C,C1-3,1-3	25'	10%(15)*	25'*	30%	80' FBL 50' STREET 20' CUL-DE-SAC	SEE SEC 16, PART IV

NOTES:
- * Riverine, marine, estuary set-back - 30' or see Art. VII, Sec. 10.
- ** Riverine, marine, estuary set-back - 40' or see Art. VII, Sec. 10.
- x No side lots required for Townhouse or Zero-lot-line except 10' at unit ends.
- \+ Set-back increased for each foot in excess of three (3) stories.

h. Under no circumstances will the applicant be allowed to utilize the mobile home for any other use other than a guest residence for an immediate member of the family as herein defined.

2) Golf courses, tennis centers, swimming pools with customary attendant facilities and accessory buildings.

3) Country clubs and their customary accessory uses.

4) Private clubs and lodges except those operated primarily as commercial enterprises.

5) Boathouses and boat docks as accessory uses providing the roof of said boathouse does not exceed 20 feet above elevation 0.0 (M.S.L.) for marine waters as established by the National Geodetic Vertical Datum of 1929 and for fresh water not to exceed 20 feet in elevation as measured from the mean elevation of the water-land interface.

6) Schools and educational institutions, public, parochial and private, with their attendant buildings and facilities.

7) Churches with attendant buildings and facilities.

8) Parks and recreational areas (See S-1).

9) Buildings used by federal, state, county or city governments for public purposes.

10) Wastewater treatment facilities.

R-2 Single Family District, (Cumulative) Low Medium Density (0-7 - DU's/acre)

A. Uses Permitted

1) Any use permitted in the preceding district.

B. Special Exceptions

1) Any special exception allowed in the preceding district.

R-3 One and Two Family District, (Cumulative) Medium Density (0-10 DU's/acre)

A. Uses Permitted

1) Any use permitted in the preceding district.

2) Single-family attached dwellings including duplexes and townhouses, building clusters and zero lot line. (Townhouse - a single-family dwelling not exceeding three stories in height which is constructed in a series or group of attached units with property lines separating such units. Each townhouse shall be considered a separate building and shall be separated from adjoining townhouses by the use of separate exterior walls meeting the requirements for zero clearance from property lines as required by the type of construction and fire protection requirements, or shall be separated by a party wall; or, when not more than three stories in height, may be separated by a single wall meeting the requirement in F.S. 481.203, Section (7) (a), (7) (b) and (7) (c).

B. Uses Prohibited

1) Any business which displays merchandise to be sold on the premises.

C. Special Exceptions

1) Any special exception allowed in the preceding districts.

2) Cemeteries, Mausoleums and Crematoriums.

3) Enclosed Animal Hospitals and Clinics.

4) Mobile Home Subdivisions/Parks subject to regulations in Article VII, Section 11.

R-6 Residential Neighborhood Commercial District, (Cumulative) High Density (0-25 DU's/acre)

A. Uses Permitted

1) Any use permitted in the preceding district.

2) Retail sales and services (gross floor area of building not to exceed 6,000 square feet). Outside storage allowed in rear yard only, with adequate screening being provided.

a. food and drugstore.
b. personal service shop.
c. clothing and dry goods store
d. home furnishings and hardware appliance.
e. speciality shop.
f. banks and financial institutions.
g. bakeries, whose products are made and sold at retail on the premises.
h. florists shops provided that products are displayed and sold wholly within an enclosed building.
i. health clubs, spa and exercise centers.
j. studio for the arts.
k. martial arts studios.
l. hardware.
m. bicycle sales and mechanical services.

3) Laundromats and dry cleaners (gross floor area not to exceed 4,000 square feet.

4) Restaurants.

5) Automobile service stations (no outside storage, minor repair only).

6) Appliance repair shops (no outside storage or work permitted).

7) Mobile Home Subdivision/Parks.

8) Other uses which are similar or compatible to the uses permitted herein that would promote the intent and purposes of this District. Determination on other permitted uses shall be made by the Planning Board with a recommendation to the Board of County Commissioners for Board action to allow or deny the use.

B. Special Exceptions

1) Any special exceptions allowed in the preceding districts.

2) Drive-Thru Restaurants.

---

23) Indoor Movie Theaters.

24) Enclosed Animal Hospitals and Clinics.

25) Campgrounds.

26) Warehousing (adjacent to and part of retail operation).

27) Boat sales and service facilities.

28) Mini warehouses.

29) Bowling alleys, skating rinks and billiard parlors providing such activities and facilities are enclosed within a soundproof building.

30) Recreational and Commercial Marina.

31) Garden shops or nurseries displaying plants, shrubs, trees, etc., outdoors adjacent to the garden shop or nursery.

32) Antique Shops, Pawn Shops and Second-hand Stores.

33) Other uses which are similar or compatible to the uses permitted herein that would promote the intent and purposes of this District. Determination on other permitted uses shall be made by the Planning Board with a recommendation to the Board of County Commissioners for Board action to allow or deny the use.

B. Special Exceptions

1) Any special exception allowed in the preceding residential districts.

2) Automobiles Sales, subject to the following conditions:

a) That the lot or site not exceed one acre in size; and

b) That the property have at least 100' of frontage on a major or minor arterial roadway.

D-2 General Commercial District (Cumulative)

A. Uses Permitted

1) Any use permitted in the preceding districts.

2) Mall shopping centers.

3) Amusement and recreational facilities such as, but not limited to, amusements parks, shooting galleries, miniature golf courses,. golf driving ranges, baseball batting ranges and trampoline centers.

4) Carnival-type amusements when located more than 500 feet from any residential District.

5) Distribution warehousing.

6) New and used car, mobile home, motorcycle and bicycle sales and mechanical service.

7) Mechanical garage with body work and painting services.

8) Radio broadcasting and telecasting stations, studios and offices.

1) Single, two and multi-family dwelling units.

S-1 Outdoor Recreational District (Non-Cumulative)

A. Uses Permitted

1) Golf Courses.

2) Country Clubs and their customary accessory uses.

3) Bird and Wildlife Sanctuaries.

4) Public Utilities and Service Structures.

5) Parks and Greenbelt areas.

B. Uses Prohibited

1) Single, Two and Multi-Family dwelling units.

2) Mobile (Residential) Homes.

3) All retail and commercial activities except those customary accessory uses of Golf Courses, Country Clubs and Parks and Greenbelt areas.

R-R Rural Residential District (Non-Cumulative) Low Density (2 DU/AC)

A. Uses Permitted

1) Single-family dwelling units and their customary accessory structures.

2) The growing of crops and plants.

3) The keeping of cows and horses and private stables.

4) Home occupations.

5) Churches and their customary attendant and accessory buildings and parking lots.

6) Schools and their customary accessory and attendant buildings and parking lots.

7) Campground facilities.

8) Horticulture, floraculture and greenhouses.

9) Mariculture and aquaculture.

10) Mobile homes, utilized as single-family residences.

11) Areas for display and sale of fruit, vegetables and similar agricultural products.

12) Public utility and service structures including but not limited to water and sewer facilities.

13) Silviculture.

B. Special Exceptions

1) Public riding stables.

2) Kennels, Animal

SDD Special Development District (Non-Cumulative) Low Density (3 DU's/acre and Special Development PUD)

A. Uses Permitted

1) Single family dwelling units and their customary accessory structures (including single family detached, duplex and triplex structures and mobile homes).

2) Home occupations.

3) Horticulture, floriculture and greenhouses.

4) Mariculture and aquaculture.

5) Areas for display and sale of fruit, vegetables and similar agricultural products.

6) The growing of crops and plants.

7) The keeping of horses and private stables.

8) Silviculture.

9) Major public utility and service structures.

B. Special Exceptions

1) Churches and their customary attendant and accessory buildings and parking lots.

2) Schools and their customary accessory and attendant buildings and parking lots.

3) Public riding stables

4) Keeping of domestic animals; pastural feeding permitted, confinement feeding prohibited.

5) PUD/SDD.

Planned Unit Development-SDD-Special Development District

1) Permitted Uses. All residential and commercial uses as specified below; (unless otherwise specified, there are no minimum requirements for lot coverage, lot size and width, and setbacks).

Residential Uses:

a. Single Family Dwelling

b. Two Family Dwelling

c. Multi-Family Dwellings including Townhomes.

Commercial Uses:

d. Restaurants (including on-premise consumption of alcohol).

e. Appliance repair shops (no outside storage or work permitted).

f. Strip shopping centers.

g. Taverns, cocktail bars and nightclubs.

home. A replacement mobile home must meet Department of Housing and Urban Development (HUD) certification standards and have a HUD seal attached to the unit.

B. Railroads and Rapid Transit, on grade. Passenger terminals are not permitted.

C. Highways and street rights-of Way.

D. Public utilities, except above ground transmission lines. No structures (except airfield lighting), buildings, or above ground utility communication lines shall be permitted within height constraints.

E. Agricultural activities, the growing of crops and plants, livestock grazing and customary accessory buildings, within height constraints.

F. Silviculture, within height constraints.

Airport Environ Area B3 (0-3 DU's/acre)

1. Uses Permitted.

A. Single Family dwellings and their customary accessory structures and uses.

B. Mobile (residential) Homes. Replacement and new mobile homes must meet Department of Housing and Urban Development (HUD) certification standards and have a HUD seal attached to the unit.

C. Railroads and Rapid Transit, on grade.

D. Highways and street rights-of-way.

E. Automobile Parking.

F. Communications Facilities.

G. Public utilities (except above ground transmission lines).

H. Community and Regional Parks. Spectator stands are not permitted.

I. Golf courses and riding stables. Clubhouses are not permitted. Meeting places, auditoriums and similar uses for gatherings of more than 25 people are not permitted.

J. Water based recreation. Clubhouses are not permitted.

K. Agricultural activities, the growing of crops and plants, livestock grazing and customary accessory buildings.

L. Forestry activities.

2. Special Exceptions.

A. Churches with attendant buildings and facilities. Schools or day care facilities which operate on a five day a week basis are not permitted.

B. Industrial and manufacturing uses of the following types:

1) Lumber and wood product.
2) Furniture and fixtures.
3) Paper and allied product.
4) Printing and publishing.
5) Distribution warehousing.

C. Governmental services. Meeting places, auditoriums and similar uses for gatherings of more than 25 people are not permitted.

D. Golf courses and riding stables. Clubhouses are not permitted. Meeting places, auditoriums and similar uses for gatherings of more than 50 people are not permitted.

E. Agricultural activities, the growing of crops and plants, livestock grazing and customary accessory buildings. Livestock farms are not permitted.

2. Special Exceptions.

A. Any special exception allowed in the preceding area.

B. Industrial and manufacturing uses of the following types:

1) Food and similar products.
2) Textile mill products.
3) Stone, clay and glass products.
4) Primary metal industries.
5) Fabricated metal industries.

C. Commercial and retail sales.

1) General merchandise.
2) Food.
3) Wearing apparel and accessories.
4) Furniture and home furnishings.

D. Finance, insurance and real estate services.

E. Personal services.

F. Professional services.

Airport Environ Area C2 (0-3 DU's/acre)

1. Permitted Uses.

A. Any use permitted in the preceding area.

B. Neighborhood parks. The park must be oriented toward forest trails and similar activities which do not concentrate groups of people greater than 50 within the park. Playgrounds are not permitted.

2. Special Exceptions.

A. Any special exception allowed in the preceding area.

B. Livestock farming.

Airport Environ Area C1 (0-3 DU's/acre)

1. Permitted Uses.

A. Any use permitted in the preceding area.

2. Special Exceptions.

A. Any special exception allowed in the preceding area.

Airport Environ Area C (0-3 DU's/acre)

2. Special Exceptions.

A. Any special exception allowed in the preceding area.

B. Auditoriums, concert halls.

C. Outdoor sports arenas, spectator sports.

D. Livestock farms.

Airport Environ Area 1 (0-3 DU's/acre)

1. Permitted Uses.

A. Any use permitted in the preceding area.

B. Nature exhibits.

2. Special Exceptions.

A. Any special exception allowed in the preceding area.

TABLE OF CONTENTS

SUBJECT		PAGE
Preamble		1
Article I	Short Title	1
Article II	Enactment and Authority	1
Article III	Jurisdiction	2
Article IV	Purpose and Intent	2
Article V	Definition of Terms	3
Article VI	District, Boundaries, Land Use Map Lots of Record	15
Section 1	District Nomenclature	15
Section 2	R-1 Single-Family District, Low Density (0-4 DU's/acre)	17
Section 3	R-2 Single Family District, Low Medium Density (0-7 DU's/acre)	18
Section 4	R-3 One and Two-Family District, Medium Density (0-10 DU's/acre)	19
Section 5	R-4 Multiple-Family District, Medium High Density (0-18 DU's/acre)	21
Section 6	R-5 Urban Residential/Limited Office District, High Density (0-20 DU's/acre)	23
Section 7	R-6 Residential Neighborhood Commercial District, High Density (0-25 DU's/acre)	24
Section 8	C-1 Retail Commercial District	26
Section 9	C-2 General Commercial District	28
Section 10	ID-1 Light Industrial District	30
Section 11	ID-2 General Industrial District	32
Section 12	S-1 Outdoor Recreational District	33
Section 13	R-R Rural Residential District	33
Section 14	AG Agricultural District	34
Section 15	SDD Special Development District	36
Section 16	Airport Land Use	45
Part I	Findings	45
Part II	Applicability	45
Part III	Definitions	46
Part IV	Height Limitations	49
Part V	Airport Environs, Uses and Site and Building Requirements	55
Part VI	Uses Interfering with Aircraft	69
Part VII	Nonconforming Uses	70
Part VIII	Platted Property	71
Part IX	Land Use Certificate	71
Part X	Special Approval	73
Part XI	Zoning Board of Adjustment	73
Part XII	Remedies	76
Article VII	General Regulations	76

ORDINANCE NO. 89-27

AN ORDINANCE ESTABLISHING LAND USE REGULATIONS FOR ESCAMBIA COUNTY, FLORIDA, PROVIDING A SHORT TITLE, CITING ENACTMENT, AUTHORITY AND JURISDICTION; PROVIDING FOR DEFINITIONS; PROVIDING DISTRICTS, BOUNDARIES AND A LAND USE MAP SERIES; PROVIDING FOR NONCONFORMING USES; PROVIDING REQUIREMENTS FOR ISSUANCE OF LAND USE CERTIFICATES; PROVIDING FOR CONFORMANCE TO REGULATIONS; PROVIDING FOR REGULATION OF SEPTIC TANKS; PROVIDING FOR REGULATION OF FENCES AND WALLS; PROVIDING FOR REGULATION OF OFFSTREET PARKING, SIGNS AND MOBILE HOMES; PROVIDING FOR PLANNED UNIT DEVELOPMENT PROJECTS; PROVIDING FOR HEIGHT AND AREA EXCEPTIONS; PROVIDING FOR MARINE/ESTUARINE/RIVERINE SETBACKS; PROVIDING FOR REGULATION OF LAND USES AROUND AIRPORTS; PROVIDING FOR MARINA SITING REQUIREMENTS; PROVIDING REVIEW CRITERIA FOR ENVIRONMENTAL SENSITIVE AREAS; PROVIDING FOR A ZONING BOARD OF ADJUSTMENT; PROVIDING FOR A PLANNING BOARD; PROVIDING FOR SPECIAL EXCEPTIONS, VARIANCES AND APPEALS; PROVIDING FOR ENFORCEMENT AND PENALTY; PROVIDING FOR MANDATORY REVIEW OF THE ORDINANCE; PROVIDING FOR AUTHORITY OF THE BOARD OF COUNTY COMMISSIONERS TO AMEND, SUPPLEMENT, CHANGE, MODIFY OR REPEAL; REPEALING AND REPLACING ESCAMBIA COUNTY ORDINANCE NUMBER 88-11, 88-17, 89-02, 89-09 AND 89-18; AND PROVIDING FOR AN EFFECTIVE DATE.

BE IT ORDAINED BY THE BOARD OF COUNTY COMMISSIONERS OF ESCAMBIA COUNTY, FLORIDA:

ARTICLE I

SHORT TITLE

These regulations shall be known as "Urban Area Land Use Regulations, Escambia County, Florida".

ARTICLE II

ENACTMENT AND AUTHORITY

In accordance with Chapters 125, 163, and 333 Florida Statutes, as amended, and the Escambia County Comprehensive Plan, as amended, for the purpose of promoting health, safety, morals and the general welfare of the community, the Board of County Commissioners shall have the power to regulate and restrict the use of land in the unincorporated areas of the County. The Board of County Commissioners is further authorized to regulate and restrict the height, number of stories and size of buildings and other structures on land and water, the percentage of lot that may be occupied, the size of yards, courts and other open spaces, the density of population, the use of buildings, structures and land for trade, industry, residence of other specific use and other matters to be regulated to safeguard the safety, health and welfare of the people. Further, it is hereby found that incompatible land uses have the potential for being hazardous to aircraft operations as well as to the persons and property on the ground in the vicinity of the incompatible land use. Incompatible land use reduces the size of areas available for the landing, taking off and maneuvering of aircraft, thus, tending to destroy or impair the utility of Pensacola Regional, NAS Pensacola, Ferguson and Coastal Airports and OLF Saufley, OLF Bronson, OLF Site 6, OLF Site 8 and Corry Hospital Heliport and the public investment therein. Accordingly, it is declared:

1. That the creation or establishment of incompatible land use around airports is a nuisance and injurious to the region

served by the Pensacola Regional, Ferguson and Coastal Airports and NAS Pensacola, OLF Saufley, OLF Bronson, OLF Site 6, OLF Site 8, and Corry Hospital Heliport.

2. That it is necessary in the interest of the public health, public safety, and general welfare that land uses be controlled so as to prevent incompatible land uses around airports. Airport operations produce noise which when certain levels are exceeded is not compatible with residential uses and certain commercial and industrial uses which are not properly soundproofed. It is further declared that both the prevention and creation or establishment of incompatible land uses, structures and the elimination, removal, alteration, mitigation, or marking and lighting of existing airport hazards are public purposes for which the political subdivision may raise and expend public funds and acquire land or interests in land.

ARTICLE III

JURISDICTION

The area subject to these Regulations shall be that portion of the unincorporated area of Escambia County under the jurisdiction of the Board of County Commissioners, south of the Tallahassee Base Line with the exclusion of the areas under Land Use Regulations, University of West Florida Vicinity, the Santa Rosa Island Authority Development Code and the Zoning Regulations of Perdido Key, Escambia County, Florida, established by Special Acts of the Legislature. Article VI, Section 16, Airport Land Use, shall be applicable to all Airport Environs and Noise Zones on the official "Escambia County Land Use Map Series." In addition all of the property as designated on the "Height Limitation Maps" shall be regulated pursuant to the provisions of this Ordinance for height limitations only. All property outside of the designated Airport Environs Zones or Noise Zones as set forth on the official "Escambia County Land Use Map Series" will be regulated as to land uses by the "Urban Area Land Use Regulations Ordinance."

ARTICLE IV

PURPOSE AND INTENT

The purpose and intent of these Regulations is to implement the Escambia County Comprehensive Plan and enabling legislation in order to:

1) Protect and promote the stability of the unincorporated portion of Escambia County;

2) Encourage the most appropriate use of land and water throughout the unincorporated urban areas of Escambia County;

3) Secure safety from fire and other dangers;

4) Promote health and the general welfare;

5) Provide adequate light and air;

6) Prevent the overcrowding of land and water to avoid undue concentration of population.

7) Preserve and facilitate the development and display of the natural beauty and attractiveness of the area; and

8) Facilitate the adequate provision of transportation, water, sewerage, schools, parks and other requirements.

9) Achieve the highest quality of life for residents of the unincorporated urban areas of Escambia County consistent with sound land development, economic, social, environmental and energy conditions.

19) Breakwater. A structure protecting a shore area, harbor, anchorage or basin from waves.

20) Building. Any structure designed or built for the support, enclosure, shelter or protection of persons, animals, chattels or property of any kind.

21) Building Area. The total ground area, taken on a horizontal plane at the mean grade level, of each building and accessory building, but not including uncovered entrance platforms, terraces, and steps.

22) Building Clusters. A group of structures, arranged in a geometric configuration, and sharing the same common areas and amenities such as swimming pools, parking lots, etc.

23) Building Height. The vertical distance measured from the established mean grade at the front building line to the highest point of the roof.

24) Building Inspector. Individual appointed by the Building Official to carry out inspections required by the Standard Building Code, as amended, and related Codes.

25) Building Line. The innermost edge of any required yard or setback.

26) Building Official. The individual responsible for conducting inspections and issuing permits under the Standard Building Code, as amended.

27) Building Permit. A permit to construct a structure on a lot issued by the Building Inspection Department according to the Standard Building Code, as amended.

28) Building Setback. A line parallel to the front lot line, tangent to the nearest part of the principal building, extending from side lot line to side lot line.

29) Bulkhead. A structure or partition constructed at least 10 feet landward of mean high water, designed to retain or prevent sliding of the land at time of construction.

30) Campground. A place where buildings or sites for vehicles or tents are rented for use as temporary living quarters for recreational purposes.

31) Cemetary. Property used for the interring of the dead.

32) Certificate of Occupancy. Official certification that a premise conforms to provisions of these regulations and the Standard Building Code, as amended, and may be used or occupied. Such Certificate is granted for new construction or for the substantial alteration or additions to existing structures. A structure may not be occupied unless such Certificate is issued by the Building Official.

33) Child Care Center. An establishment where, for a fee, more than five children, other than members of the family occupying the premises, are cared for away from their own home by day or night. The term includes day nurseries, but does not include foster homes.

34) Church. A building designed and/or used for public religious worship.

34.1) Church, Attendant Structures and Uses. All structures and uses located on the same parcel of property as the main church building or a contiguous parcel which is utilized primarily for the members of the church. Day care centers or schools operated more than three (3) days a week for instruction of individuals who are not members or guests shall not be considered as attendant structures or uses.

51) **Dwelling. A building which is designed or used exclusively for residential purposes, but does not include hotels, motels, or any temporary lodging for transient residence.**

52) Dwelling Unit (DU). One or more rooms, designed, occupied or intended of occupancy as separate living quarters, with cooking, sleeping and sanitary facilities provided within the dwelling unit for the exclusive use of a single family maintaining a household.

53) Dwelling - Single Family (Detached). A dwelling designed for and/or occupied by one family.

54) Dwelling - Two-Family (Duplex). A dwelling which has two kitchens and is designed for and/or occupied by two families.

55) Dwelling - Multiple. A dwelling designed for and/or occupied by three or more families.

56) Easement. An interest in land owned by another which entities the holder to a specific use or enjoyment.

57) Elevations. All Mean Sea Level (M.S.L.) elevations in these Land Use Regulations shall be measured from certified bench marks throughout the area.

58) Emission. The act of passing into the atmosphere an air contaminant or gas stream which contains or may contain an air contaminant, or the material so passed into the atmosphere.

59) Enforcing Officer. The administrative officer designated to administer these Regulations and issue Land Use Certificates.

60) Engineer. A person registered and currently licensed to practice Professional Engineering in the State of Florida.

61) Family. One or more persons occupying a dwelling unit and living as a single housekeeping unit, as distinguished from persons occupying a lodging house or hotel, as herein defined.

62) Family, Immediate. Grandparents, parents, grandchildren, children and/or siblings, related by blood or marriage to the owner of the principal building.

63) Filling Station. See Automobile Service Station.

64) Finding. A determination or conclusion based on the evidence presented and prepared in support of a decision by the Board of Adjustment (BOA).

65) Floor Area. Total floor area of all stories including halls, stairways, elevator shafts, and other related uses, measured to outside faces of exterior walls of a building exclusive of vent shafts, courts, carports, garages, breezeways and patio.

66) Footprint. The surface area enclosed or covered by the footing, foundation or outermost projection of any floor of a building, whichever area is greater.

67) Foster Care Facility. Home for maximum of five persons (including the Foster Parent's own children) which is licensed by the State of Florida. Home must meet Fire/Safety Codes and pass Sanitation Inspections.

68) Fraternities. See Club.

69) Garage Apartments. An accessory building containing living facilities and space for at least one automobile.

70) Garage, Private Residential. An accessory building or portion of the principal residential building including carport used for the storage of automobiles of the occupants of the principal building.

85) Junk Yard. An area where waste, used or second-hand materials, equipment and/or machinery is bought, sold, exchanged, bagged, maintained, stored, baled, packed, disassembled, or handled, including but not limited to, wrecked or inoperable automobiles, scrap iron and other metals, paper, rags, rubber tires, bottles, and used building materials, plumbing fixtures, electrical fixtures, and lumber. Junk yards shall include specifically, but not by way of limitations, automobile wrecking yards, building materials wrecking, and/or storage yards and used appliance wrecking and/or storage yards.

86) Kennel, Animal. Any structure or premises in which animals are kept, boarded, bred or trained for commercial gain.

87) Kindergarten. A building or portion thereof used for the instruction of pre-school aged children. This term shall include day nurseries.

88) Land Area. The total land area within the property lines of a lot.

89) Land Use Certificate. Certificate issued by the Enforcing Officer indicating that a proposed use of land is in conformity with these Regulations, a prerequisite to issuance of a Building Permit.

90) Land Use Map. The map or maps, which are a part of these Regulations and delineate the boundaries of zoned districts.

91) Laundry, Self-Service. A business that provides coin-operated washing, drying, dry cleaning, and/or ironing machines for hire, used by customers on the premises.

92) Livestock. A tame animal such as a cow, horse, sheep, pig, goat or chicken, but not necessarily limited to these animals, Dogs and cats are not included.

93) Lodging House. See Boarding House.

94) Lot. The least fractional part of subdivided lands having limited fixed boundaries which has a letter or number by which it may be identified.

94.1) Corner Lot. A lot abutting upon two or more streets at a street intersection or upon two parts of the same street forming an interior angle of less than 135 degrees.

94.2) Double Frontage Lot. A lot having frontage on two nonintersecting streets, as distinguished from a corner lot.

94.3) Interior Lot. Lot other than a corner lot.

94.4) Nonconforming Lot. A lot which fails to meet requirements of the Land Use District in which it is located with regards to lot area, width or other characteristics.

95) Lot Depth. The average horizontal distance between the front and rear property lines.

96) Lot Line. The boundary dividing a lot from a right-of-way or adjoining tracts of land.

97) Lot of Record. A lot which exists as shown or described on a plat or deed in the official records of Escambia County on or before the adoption of these Regulations by the Board of County Commissioners.

98) Lot Width. The horizontal distance measured along the building setback line, between the two side property lines.

113) Mobile Home Subdivision. A subdivision of mobile homes where two or more individual lots are owned by owners and where a portion of the subdivision or the amenities exclusively serving the subdivision are retained by the subdivision developer/owner or Homeowners Association.

114) Motel. A building or group of buildings designed to provide sleeping accommodations for transient automobile travelers. Includes Auto Courts, Tourist Courts, Motor Lodges or Motor Inns.

115) Motor Vehicle. A self-propelled free moving vehicle, usually with four or more wheels, primarily for conveyance on a street or roadway.

116) Non-Conforming Use. Any use of a building or land lawfully existing at the time of passage of these Regulations or amendments thereto, which does not conform to the land use regulations of the district in which it is located.

117) Noxious Matter. Material which is capable of causing injury to living organisms by chemical reactions.

118) Nursery School. See Child Care Center.

119) Nursing, Convalescent, or Rest Home. A home for two or more aged, convalescent, chronically ill or incurable persons, not of the same family, where food, shelter and care are provided. Not including hospitals, clinic or medical institutions.

120) Open Space. Any parcel or area of land or water essentially unimproved and set aside, dedicated, designated or reserved for public or private use or enjoyment or for the use and enjoyment of owners and occupants of land adjoining or neighboring such open space.

121) Out-Building. A structure erected for the purpose of sheltering domestic animals and/or for the storage of crops or equipment.

122) Outdoor Recreational District. An area used exclusively for outdoor recreational purposes (See Section 12, S-1 Outdoor Recreational District.

123) Owner. The owner of the fee simple title of record, a vendee under a contract by agreement for deed, or a lessee under a written lease whose term is more than ten years.

124) Package Store. An establishment selling liquor for off-premise consumption.

125) Parcel. A lot or contiguous group of lots, in single ownership or under single control considered a unit for purposes of development. See Plot or Site.

126) Park. A tract of land, designated and used by the public for active and passive recreation.

127) Parking Lot. A parcel used for the storage or parking of motor vehicles, either for compensation or to provide an accessory service to a commercial or residential use.

128) Parking Space. A space for the parking of a motor vehicle within a public or private parking area.

129) Pastoral Feeding. Pastured feeding of domestic animals, where the pasture provides the major portion of feed consumed and the pasture is maintained during the period of time that such pasture is occupied by domestic animals.

130) Permissible Use. Any use authorized in a particular zoning district, a permitted use or special exception use.

148) Restrictive Covenents. Private regulations recorded with the Final Plat, which limit or otherwise govern the use, intensity and development patterns of the land within a subdivision or other parcel of land for a specified time.

149) Revetment. A facing built to protect a scarp, embankment or shore structure against erosion by wave action or currents, constructed of, for example, concrete or stone.

150) Right-of-Way. The areas of a highway, road, street or way reserved for public use, whether established by prescription, dedication, gift, purchase, eminent domain or any other legal means.

151) Rigid Shore Protection Structure. Shore hardening structures, such as seawalls, bulkheads, revetments, rubble mound structures; groins; aggregates of materials other than beach sand used for shoreline protection against erosion and wave and hydrodynamic forces.

152) Rooming House. See Boardinghouse.

153) Satellite Television Receiving Dishes (ground mounted). A device commonly parabolic in shape, mounted at a fixed point on the ground for the purpose of capturing television signals transmitted via satellite communication facilities and serving the same or similar function as the common television antenna. Said devices are here in defined as accessory structures.

154) School. An institution primarily for academic instruction, public, parochial or private, including day care facilities, which provides an organized course of instruction for its attendees.

155) Seawall. A structure separating land and water areas, primarily designed to prevent erosion and other damage due to wave action (See also Bulkhead).

156) Service Station. See Automobile Service Station.

157) Setback. The distance between the street right-of-way and the front building line of the principal building.

158) Shopping Center. A group of commercial establishments planned, constructed and managed as an entity with customer and employee parking provided on-site, provision for goods delivery separated from customer access, and designed to serve a community or neighborhood.

159) Sight Triangle. A triangular shaped portion of land established at street intersections in which nothing is to be erected, placed, planted or allowed to grow in such a manner as to limit or obstruct the sight distance of motorists entering or leaving the intersection.

160) Silviculture. The development, maintenance and management of forest resources.

161) Site. A plot of land suitable for development, or on which a building or buildings are built.

162) Site Plan. A plan, to scale, showing uses and structures proposed for a parcel of land as required by these Regulations including lot lines, streets, building sites, reserved open space, existing building, major landscape features and topography and proposed utility lines and easements.

163) Sororities. See Clubs.

164) Special Exception. A use that would not be appropriate generally throughout a particular district, but which, if controlled as to number, area, location, or relation to the

townhouse shall be considered a separate building and shall be separated from adjoining townhouses by the use of separate exterior walls meeting the requirements for zero clearance from property lines as required by the type of construction and fire protection requirements, or shall be separated by a party wall; or, when not more than three stories in height, may be separated by a single wall meeting the requirement in F.S. 481.203, Section (7) (a), (7) (b) and (7) (c).205)Trailer. See Mobile Home.

176) Trailer Park. See Mobile Home Park.

177) Truck Stop or Terminal. Buildings and premises designed so as to cater principally to trucks where the functions and services rendered by a mechanical garage may be rendered, but not to include the storage of vehicles for the purpose of using parts of said vehicles for sale or repair.

178) Use, Principal. The main use of land or buildings as distinguished from a subordinate or accessory use.

179) Used Car Lot. Any parcel of land used for the storage, display and sales of used automobiles in running condition.

180) Variance. A modification of fhe Land Use Regulations when such modification will not be contrary to the public interest and when, owing to conditions peculiar to the property and not the result of the actions of the applicant, a literal enforcement of the ordinance would result in unnecessary and undue hardship. A variance is authorized only for height, area, bulk, and size of structure or yard size, and open spaces. Establishment or expansion of a use otherwise prohibited shall not be allowed by variance, nor shall a variance be granted because of the presence of nonconformities in the district or classification or in adjoining district or classifications.

181) Visibility Clearance at Intersections. See Sight Triangle.

182) Wetlands. Thoses areas that are inundated or saturated by surface or ground water at a frequency and duration sufficient to support, and that under normal circumstances do support, a prevalence of vegetation typically adpated for life in saturated soil conditions. Swamp hammocks, hardwood swamps, riverine cypress, cypress ponds, bayheads and bogs, wet prairies, freshwater marshes, tidal flats, saltmarshes, mangrove swamps, and marine meadows are examples of wetlands, but these classifications are not meant to be the exclusive types of habitats to be condsidered wetlands, but are meant to serve as illustrations only.

183) Wetlands, Adjacent. Wetlands separated from other watercourses or waterbodies by manmade dikes or barriers, natural river berms, beach dunes and the like.

184) Wetlands, Contiguous. Wetlands bordering on neighboring watercourses or water bodies. The term includes wetlands that lack a defined stream channel but serve as wet season waterways.

185) Wetlands, Isolated. Wetlands not adjacent to watercourses or waterbodies. These wetlands occur on flatland where the lack of slope and poor soil drainage cause a portion of the rainwater or the water table to collect in shallow ponds isolated from surface drainage features.

186) Yard. The open space surrounding the principal building on any lot.

186.1) Front Yard. That portion of the yard extending the width of the lot measured between the front lot line and the front building line.

The boundaries of such districts as are shown upon the Land Use Map Series adopted as part of these Regulations or amendments thereto are hereby adopted and approved. Regulations governing the use of land and buildings, the height of buildings, building site areas, the size of yards about buildings and other matters are established and declared to be in effect upon all land included within the boundaries of each district shown upon the Land Use Map Series. Where uncertainty exists as the boundaries of any district shown on a map, the following rules shall apply:

Where district boundaries are indicated as approximately following street center lines, alley lines or lot lines, such lines shall be construed to be district boundaries.

Where a district boundary divides a lot of record , the location of such boundary shall be determined by use of the scale appearing on the map unless said boundary is located by dimensions. Where a district boundary line divides a lot of record into equal sections, the more restrictive zoning classification shall regulate. If a lot of record is divided into unequal sections, the regulations shall be those applicable to the largest section.

Where any street or alley is officially vacated, the regulations applicable to each parcel of abutting property shall apply to that portion of such street or alley added to each parcel by such vacation.

Where a lot or parcel of land has an area or a width less than the minimum required in the land use district and was a separate lot of record as of the date of adoption of this ordinance, the Enforcing Officer may vary area, yard and landscaping requirements up to the limits stated in Setback Requirements up to a maximum of 50 percent without referring the matter to the Zoning Board of Adjustments.

Setback Requirements:

Unless required by other more restrictive district regulations, the minimum setback line on all roads which have been assigned a State Highway Number (including County Maintained State Roads), U.S. Highways, and Interstate Highways shall be at least sixty-five (65) feet from the center line of the right-of-way or fifteen (15) feet inside the property line, whichever is greater. Exempt from this requirement are renovations, but not additions, to existing buildings resulting from road construction when a County road becomes a State road. Unless required by other more restrictive district regulations, the minimum setback line on all other County roads shall be forty-eight (48) feet from the center line of the right-of-way or fifteen (15) feet inside the property line, whichever is greater.

The Enforcing Officer may grant waivers to Setback Requirements in the following cases:

A. Additions to buildings or structures in violation of Setback Requirements in which the addition is not in violation of the Setback Requirements may be waived without execution of a No Cost Agreement for the addition.

B. Additions to building or structures which upon construction would be in violation, but extend no further into the setback area than the existing building upon the execution and filing of a No Cost Agreement. A copy of the No Cost Agreement shall be filed with the Enforcing Officer.

C. The Enforcing Officer may grant waivers for mobile homes in violation of Setback Requirements as long as the mobile home (excluding hitch) is at least fifteen (15) feet on the individuals own property and waivers will specify that the mobile home will be moved at the request of the Board of County Commissioners.

Signs, lights, fences, and temporary power poles may be permitted as temporary structures in the setback area, but shall be removed at the

C. Off-street Parking Requirements

See Article VII, Section 6.

D. Site and Building Requirements

1) Lot Coverage. The maximum combined area occupied by all principal and accessory buildings shall not exceed 30 percent of the total lot area. Lots that are platted under the provisions of Escambia County Subdivision Regulations, No. 86-30, or any duly authorized successor ordinance, shall be exempt from this requirement.

2) Lot Width. The minimum lot width at the front building line shall be 80 feet and at the street right-of-way 50 feet. Every cul-de-sac lot shall have a minimum of 20 feet at the street right-of-way.

3) Front Yard Requirements. There shall be a front yard having a depth of not less than 25 feet provided that in blocks where 50 percent or more of the lots are developed, the front yard required shall be the average setback of the dwellings already constructed.

4) Rear Yard Requirements. The minimum rear yard shall not be less than 25 feet in depth. On property abutting estuarine, riverine or creek systems, the setback shall be in accordance with the Marine/Estuarine/Riverine Setback (MERS) Provision of these Regulations (Article VII, Section 10) or 30 feet, whichever is greater.

5) Side Yard Requirement. The minimum side yard on each side shall be 10 percent of the lot width measured at the front building line; however, side yards need not exceed 15 feet on each side. On property abutting estuarine, riverine or creek systems, the setback shall be in accordance with the Marine/Estuarine/Riverine Setback (MERS) Provision of these Regulations (Article VII, Section 10) or 30 feet, whichever is greater.

6) Building Height Requirements. No building shall exceed 2 1/2 stories or 35 feet in height above the habitable first floor.

E. Signs

See Article VII, section 7.

F. Landscaping

See Article VII, Section 13.

Section 3 - R-2 Single Family District, (Cumulative) Low-Medium Density (0-7 - DU's/acre)

Intent and Purpose of District:

District R-2 is intended to be single-family residential area with large lots and low population density. Certain structures and uses required to serve educational, religious, utilities, and non-commercial recreational needs of such areas are also permitted within the district.

2) Single-family attached dwellings including duplexes and townhouses, building clusters and zero lot line. (Townhouse - a single-family dwelling not exceeding three stories in height which is constructed in a series or group of attached units with property lines separating such units. Each townhouse shall be considered a separate building and shall be separated from adjoining townhouses by the use of separate exterior walls meeting the requirements for zero clearance from property lines as required by the type of construction and fire protection requirements, or shall be separated by a party wall; or, when not more than three stories in height, may be separated by a single wall meeting the requirement in F.S. 481.203, Section (7) (a), (7) (b) and (7) (c).

3) In home child and adult care centers and foster care facilities shall be permitted only when owners of immediately adjacent property give their written consent.

4) Guest Residences of no more than one guest residence per dwelling unit (DU) per lot.

B. Special Exceptions

1) Any special exception allowed in the preceding district.

2) Mobile homes utilized as guest residences.

C. Off-Street Parking Requirements

See Article VII, Section 6.

D. Site and Building Requirements

1) Lot Coverage. The maximum combined area occupied by all principal and accessory buildings shall not exceed 30 percent of the total area. Lots that are platted under the provisions of Escambia County Subdivision Regulations, No. 86-30, or any duly authorized successor ordinance, shall be exempt from this requirement.

2) Lot Width. Minimum lot width for a single-family dwelling measured at the front building line shall be 50 feet and at the street right-of-way, 40 feet. The minimum lot width for a two-family dwelling shall be 80 feet at the front building line and 50 feet at the street right-of-way line. Every cul-de-sac lot shall have a minimum of 20 feet at the street right-of-way.

3) Front Yard Requirements. There shall be a front yard having a depth of not less than 25 feet provided that in blocks where 50 percent or more of the lots are developed, the front yard required shall be the average setback of the dwellings already constructed.

4) Rear Yard Requirements. The minimum rear yard shall not be less than 25 feet in depth. On property abutting estuarine, riverine or creek systems, the setback shall be in accordance with the Marine/Estuarine/Riverine Setback (MERS) Provision of these Regulations (Article VII, Section 10) or 30 feet, whichever is greater.

5) Side Yard Requirements. The minimum side yard on each side shall be 10 percent of the lot width measured at the front building line, however, side yards need not exceed 15 feet on each side. A minimum side yard of 15 feet shall be required between building clusters and townhouse groups. No side yards shall be required in attached clusters, townhouses, or zero lot line projects except at the ends of the projects where a minimum of 15 feet shall be required. On property abutting estuarine, riverine or creek systems, the setback shall be in accordance with the

D. Site and Building Requirements

1) Lot Coverage. The maximum combined area occupied by all principal and accessory buildings excluding parking facilities for residents required by Article VII, Section 6, (1) hereof shall be:

Building Height	Maximum Lot Coverage
1 to 2 stories	40%
3 to 4 stories	35%
5 to 6 stories	30%
7 to 9 stories	25%
10 to 13 stories	17%
Over 13 stories	15%

2) Lot Width. Minimum lot width for a single-family detached dwelling measured at the front building line shall be 50 feet and at the street right-of-way, 40 feet. The minimum lot width for a two-family dwelling shall be 80 feet at the front building line and 50 feet at the street right-of-way line. The minimum lot width for a multiple-family dwelling or a boarding or lodging house shall be 100 feet at the front building line. Every cul-de-sac lot shall have a minimum of 20 feet at the street right-of-way.

3) Front Yard Requirements. There shall be a front yard having a depth of not less than 25 feet. In the case of multi-family projects, there shall be a project front yard having a depth of not less than 20 feet.

4) Rear Yard Requirements. There shall be a front yard having a depth of not less than 25 feet. On property abutting estuarine, riverine or creek systems, the setback shall be in accordance with the Marine/Estuarine/Riverine Setback (MERS) Provision of these Regulations (Article VII, Section 10) or 25 feet, whichever is greater. In the case of multi-family projects, there shall be a project front yard having a depth of not less than 20 feet.

5) Side Yard Requirements. The side required on each side for buildings not exceeding three stories in height shall be 10 percent of the lot width, but each side yard need not exceed 10 feet. For buildings exceeding three stories, the side yard shall be increased in accordance with the formula that for each additional foot the building is set back from all property lines, three feet may be added to the height of the building(s) but no side yard in excess of 15 feet shall be required on Pensacola bayfront lots. No side yards shall be required in attached Townhouse or Zero Lot Line projects except at the end of such projects where a minimum of ten feet shall be required. On property abutting estuarine, riverine or creek systems, the setback shall be in accordance with the Marine/Estuarine/Riverine Setback (MERS) Provision of these Regulations (Article VII, Section 10) or 25 feet, whichever is greater. In the case of multi-family projects, there shall be a project sideyard having a depth of not less than 5 feet.

6) Townhouses. Site and building requirements apply to total structure rather than individual units with such being determined prior to issuance of a Land Use Certificate.

E. Signs

See Article VII, Section 7.

F. Landscaping

See Article VII, Section 13.

of-way line. The minimum lot width for a multiple-family dwelling or a boarding or lodging house shall be 100 feet at the front building line. Every cul-de-sac lot shall have a minimum of 20 feet at the street right-of-way. In the case of multi-family projects there shall be a project front yard having a depth of not less than 20 feet.

3) Front Yard Requirements. There shall be a front yard having a depth of not less than 25 feet. In the case of multi-family projects there shall be a project front yard having a depth of not less than 20 feet.

4) Rear Yard Requirements. There shall be a rear yard having a depth of not less than 25 feet. On property abutting estuarine, riverine or creek systems, the setback shall be in accordance with the Marine/Estuarine/Riverine Setback (MERS) Provision of these Regulations (Article VII, Section 10) or 25 feet, whichever is greater.

5) Side Yard Requirements. The side yard required on each side for buildings not exceeding three stories in height shall be 10 percent of the lot width, but each side yard need not exceed 10 feet. For buildings exceeding three stories, the side yards shall be increased in accordance with the formula that for each additional foot, the building is set back from all property lines, three feet may be added to the height of the buildings. No side yards shall be required in attached Townhouse or Zero Lot Line projects except at the ends of such projects where a minimum of 10 feet shall be required. On property abutting estuarine, riverine or creek systems, the setback shall be in accordance with the Marine/Estuarine/Riverine Setback (MERS) Provision of these Regulations (Article VII, Section 10) or 25 feet, whichever is greater. In the case of multi-family projects there shall be a project sideyard having a depth of not less than 5 feet.

F. Signs

See Article VII, Section 7.

G. Landscaping

See Article VII, Section 13.

Section 7 - R-6 Residential Neighborhood Commercial District, (Cumulative) High Density (0-25 DU's/acre)

Intent and Purpose of District:

This district is intended to provide for a mixed use area of residential, office and professional, and certain types of neighborhood convenience shopping - retail sales and services which permit a reasonable use of property while preventing the development of blight or slum conditions. This district shall be established in areas where the intermixing of such uses has been the custom, where the future uses are uncertain and some redevelopment is probable.

A. Uses Permitted

1) Any use permitted in the preceding district.

2) Retail sales and services (gross floor area of building not to exceed 6,000 square feet). Outside storage allowed in rear yard only, with adequate screening being provided.

a. food and drugstore.
b. personal service shop.
c. clothing and dry goods store
d. home furnishings and hardware appliance.
e. speciality shop.

shall be 10 percent of the lot width, but each side yard need not exceed 10 feet. For buildings exceeding three stories, the side yards shall be increased in accordance with the formula that for each additional foot, the building is set back from all property lines, three feet may be added to the height of the buildings. No side yards shall be required in attached townhouse projects except at the side yard of such projects where a minimum of 10 feet shall be required. On property abutting estuarine, riverine or creek systems, the setback shall be in accordance with the Marine/Estuarine/Riverine Setback (MERS) Provision of these Regulations (Article VII, Section 10) or 20 feet, whichever is greater. In the case of multi-family projects there shall be a project side yard having a depth of not less than 5 feet.

E. Signs

See Article VII, Section 7.

F. Landscaping

See Article VII, Section 13.

Section 8 - C-1 Retail Commercial District (Cumulative)

Intent and Purpose of District

This district is composed of lands and structures used primarily to provide for the retailing of commodities and the furnishing of selected services. The district also provides for retail operations entailing limited fabricating/assembling where all such operations are within the confines of the building and do not produce undesirable effects on nearby property. The scale and intensity of commercial uses allowed within this district are intended to be of a nature compatible with adjacent residential development.

A. Uses Permitted

1) Any use permitted in the preceding districts.

2) Strip Shopping Centers.

3) Taverns, cocktail bars and nightclubs.

4) Personal service establishments such as, but not limited to, banks, barber shops, beauty parlors, medical and dental clinics, restaurants including on-premise consumption of alcohol, financial institutions, professional and other offices, parking garages and lots, laundry and dry cleaning pickup stations, self-service coin-operated laundry and dry cleaning establishments, shoe repair, tailoring, watch and clock repair, locksmiths and data processing.

5) Retail businesses such as: drug, package, hardware stores, book, stationery, china and luggage shops, newsstands, photographic supplies and studios, and wearing apparel shops.

6) Restaurants (with drive-thru services). Drive-in restaurants provided that the boundaries of the tract of land on which they are located are in excess of 200 feet from any R-1 or R-2 residential district.

7) Automobile repair shops for ignition, fuel, brake and suspension systems or similar uses.

8) Automobile service stations including minor auto repairs.

9) Automobile washing facility.

C. Off-Street Parking and Loading Regulations

See Article VII, Section 6.

D. Traffic Requirements

1) No entrances or exits shall direct traffic into adjacent residential areas.

E. Landscaping

See Article VII, Section 13.

F. Site and Building Requirements

1) Residential site and building requirements shall be the same as for the R-5, Urban Residential/Limited Office District. For hotels and motels, there are no maximum density limits; however, all applicable lot coverage provisions and all other applicable regulations which apply to such developments must be complied with. For other principal uses, the following shall apply:

2) Lot Area. There shall be no minimum lot area, except for recreational camping facilities which shall require a minimum lot size of five acres.

3) Lot Coverage. The maximum combined area occupied by all principal and accessory buildings shall not exceed the following:

Building Height	Maximum Lot Coverage
1 and 2 stories	55%
3 and 4 stories	50%
5 and 6 stories	45%
7 and 9 stories	40%
10 to 13 stories	35%
Over 13 stories	30%

4) Lot Width. There shall be no minimum lot width.

5) Yard Requirements. There shall be a front and rear yard of at least fifteen feet. There shall be a minimum side yard of ten feet on each side. On property abutting an estuarine, riverine or creek system, the setback shall be in accordance with the Marine/Estuarine/Riverine Setback (MERS) Provision of these Regulations (Article VII, Section 10) or 20 feet, whichever is greater.

G. Signs

See Article VII, Section 7.

H. Screening Adjacent to Residential Areas.

Where a lot line within a C-1 Retail Commercial District abuts a side or rear lot line of any residential lot, screening is required. Such screening may be in the form of walls, fences, or landscaping and shall be at least 50% opaque as viewed from any point along said residential lot line. When landscaping is used for screening, the opacity requirements shall be attained within 18 months of the issuance of the Certificate of Occupancy.

Section 9 - C-2 General Commercial District (Cumulative)

Intent and Purpose of District:

This district is composed of certain land and structures used to provide for the wholesaling and retailing of commodities and the furnishing of several major services and selected trade shops. The district also provides for operations entailing

E. Screening Adjacent to Residential Areas.

Where a lot line within a C-2 General Commercial District abuts a side or rear lot line in any residential lot, screening is required. Such screening may be in the form of walls, fences, or landscaping and shall be at least 50% opaque as viewed from any point along said residential lot line. When landscaping is used for screening, the opacity requirments shall be attained within 18 months of the issuance of the Certificate of Occupancy.

F. Landscaping

See Article VII, Section 13.

G. Site and Building Requirements

1) Residential site and building requirements shall be the same as for the R-5, Urban Residential/Limited Office District. For other principal uses, the following shall apply:

2) Lot Area. There shall be no minimum lot area.

3) Lot Coverage. The maximum combined area occupied by all principal and accessory buildings shall not exceed the following:

Building Height	Maximum Lot Coverage
1 and 2 stories	55%
3 and 4 stories	50%
5 and 6 stories	45%
7 to 9 stories	40%
10 to 13 stories	35%
Over 13 stories	30%

4) There shall be no minimum lot width.

5) Yard Requirements. There shall be a front and rear yard of at least 15 feet. There shall be a minimum side yard of 10 feet on each side. On property abutting an estuarine, riverine or creek system, the setback shall be in accordance with the Marine/Estuarine/Riverine Setback (MERS) Provision of these Regulations (Article VII, Section 10) or 20 feet, whichever is greater.

6) Signs. See Article VII, Section 7.

Section 10 - ID-1 Light Industrial District (Cumulative) (No Residential Uses Allowed)

Intent and Purpose:

This district is intended primarily for research-oriented activities, light manufacturing and processing not involving the use of materials, processes or machinery likely to cause undesirable effects upon nearby property.

A. Uses Permitted

1) Any non-residential use permitted in the preceding district.

2) Research and development operations, towers, light manufacturing, processing or fabricating uses, enclosed storage structures and accessory structures and activities provided that the Board of Adjustment finds that the following standards are met.

a) All work operations must be conducted within the buildings of the plant. All waste material must be stored while on the lots in a screened enclosure.

district prior to or at the time of development of such lot. Planting screens shall reach six feet in height within two years of planting.

D. Landscaping

See Article VII, Section 13.

Section 11 - ID-2 General Industrial District (Non-Cumulative)

A. Uses Permitted

1) Any use not permitted in ID-1 Light Industrial District. No Land Use Certificate shall be issued until the use and the location have been approved by the Board of County Commissioners subject to the following procedure:

a) A request shall be made with the Board of Adjustment to permit a specific use.

b) The Board of Adjustment shall review the request and make a recommendation to the Board of County Commissioners.

c) Within 45 days the Board of County Commissioners shall hold a public hearing as provided for in Article VIII.

d) The Board of County Commissioners shall approve or deny the request within 30 days after the public hearing.

B. Uses Prohibited

1) Single, two and multi-family dwelling units.

C. Site and Building Requirements

1) Building Height Requirement. No building shall exceed three stories or 40 feet in height except as otherwise provided in Article VII, Section 9.

2) Minimum Lot Size. The minimum lot area of an ID-2 General Industrial District shall be 20 acres.

3) Lot Coverage. The maximum combined area occupied by all principal and accessory buildings shall not exceed 50 percent of the total lot area except as provided for in the Escambia County Lot Coverage Ordinance, No. 85-29, as amended, or any duly authorized sucessor ordinance.

4) Lot Width. The minimum lot width at the street right-of-way shall be 100 feet.

5) Yard Requirement. There shall be a front yard having a depth of not less than 25 feet. There shall be a rear yard having a depth of not less than 25 feet. There shall be side yards of not less than 15 feet.

D. Landscaping

See Article VII, Section 13.

E. Screening Adjacent to Residential Areas.

Where a lot line within an ID-2 General Industrial District abuts a side or rear lot line in any residential lot, screening is required. Such screening may be in the form of walls, fences, or landscaping and shall be at least 50% opaque as viewed from any point along said residential lot line. When landscaping is used for screening, the opacity requirments shall be attained within 18 months of the issuance of the Certificate of Occupancy.

Section 12 - S-1 Outdoor Recreational District (Non-Cumulative)

Intent and Purpose of District:

This district is intended to preserve and maintain the land for outdoor recreational uses and open space.

A. Uses Permitted

1) Golf Courses.

2) Country Clubs and their customary accessory uses.

3) Bird and Wildlife Sanctuaries.

4) Public Utilities and Service Structures.

5) Parks and Greenbelt areas.

B. Uses Prohibited

1) Single, Two and Multi-Family dwelling units.

2) Mobile (Residential) Homes.

3) All retail and commercial activities except those customary accessory uses of Golf Courses, Country Clubs and Parks and Greenbelt areas.

Section 13 - R-R Rural Residential District (Non-Cumulative) Low Density (2 DU/AC)

Intent and Purpose of District:

This district is intended to be a residential area of low density in a semi-rural or rural environment. This district is intended to provide a transition from urban to rural densities and agricultural uses.

A. Uses Permitted

1) Single-family dwelling units and their customary accessory structures.

2) The growing of crops and plants.

3) The keeping of cows and horses and private stables.

4) Home occupations.

5) Churches and their customary attendant and accessory buildings and parking lots.

6) Schools and their customary accessory and attendant buildings and parking lots.

7) Campground facilities.

8) Horticulture, floraculture and greenhouses.

9) Mariculture and aquaculture.

10) Mobile homes, utilized as single-family residences.

11) Areas for display and sale of fruit, vegetables and similar agricultural products.

12) Public utility and service structures including but not limited to water and sewer facilities.

13) Silviculture.

Intent and Purpose of District

This district is intended to identify those areas used primarily for farming, and/or the raising of livestock, and silviculture. Since the conservation of such land as open rural area is deemed desireable and needed, the district is established to distinguish these areas and preserve them.

A. Uses Permitted

1) Agricultural activities, the growing of crops and plants, and raising of domestic animals and customary accessory buildings.

2) Silviculture.

3) Mariculture and Aquaculture.

4) Single-family residences.

5) Campground and Recreational Vehicle Parks.

6) Public Utilities and Service Structures.

7) Stables, private and public.

8) Animal hospitals, clinics and kennels.

9) Areas for display and sale of fruit, vegetables and similar agricultural products.

10) Mobile homes as a single-family dwelling, subject to the provisions of Article VII, Section 11.

11) Churches with attendant building and facilities.

12) Schools and educational institutions with their attendant buildings and facilities.

13) Private clubs and lodges.

14) Guest Residences.

15) Public utility and service structures including but not limited to water and sewer facilities.

B. Uses Prohibited

1) Two-family and Multi-family dwellings

C. Special Exceptions

1) Hunting preserve.

2) Buildings used by federal, state, county or city governments for public purposes.

3) Wastewater treatment facilities, electric power, fire and police uses.

D. Site and Building Requirements

1) Lot Area, Minimum. One family - 1 1/2 acres, however, any deed or gift of any parcel of land given without valuable consideration to any member of the donor's immediate family shall be exempted from the minimum lot area requirements. The deeding option shall be limited to one time only for each immediate family member. Public utility structures, animal hospitals, clinics and associated kennels, churches and schools shall be exempted from the minimum lot area requirement.

b. The project must be determined to be an environmentally sound project (not detrimental to the environment) through review of the following criteria:

1. DER, DNR, COE, Escambia County Health Department and ECUA review and make recommendations on the project.

2. Findings of the County Staff.

c. Construction is undertaken and completed in a manner and to a specification which protects, conserves or preserves the natural resources in the area to the maximum reasonable extent.

d. A finding has been made by the Board of County Commissioners that the proposed construction meets public need.

B. Special Exceptions

1) Churches and their customary attendant and accessory buildings and parking lots.

2) Schools and their customary accessory and attendant buildings and parking lots.

3) Public riding stables

4) Keeping of domestic animals; pastural feeding permitted, confinement feeding prohibited.

5) PUD/SDD.

C. Site and Building Requirements (Requirements apply to the area that is not state and/or federal jurisdictional wetlands).

1) Lot Area, Minimum

Horses and Private Stables	2	acres
Public Stables	10	acres
Keeping of Domestic Animals	2	acres

2) Lot Coverage. The maximum combined area occupied by all principal and accessory buildings shall not exceed 30 percent of the total lot area. Lots that are platted under the provisions of Escambia County Subdivision Regulations, No. 86-30, or any duly authorized successor ordinance, shall be exempt from this requirement.

3) Lot Width. The minimum lot width at the front building line shall be 80 feet.

4) Front Yard Requirements. The minimum front yard shall not be less than 25 feet in depth.

5) Rear Yard Requirements. The minimum rear yard shall not be less than 25 feet in depth. On property abutting an estuarine, riverine or creek system, the setback shall be in accordance with the Marine/Estuarine/Riverine Setback (MERS) provision (Article VII, Section 10) of these regulations.

6) Side Yard Requirments. The minimum side yard on each side shall be 10% of the lot width measured at the front building line, however, side yards need not exceed 15 feet on each side. On property abutting an estuarine, riverine or creek system, the setback shall be in accordance with the Marine/Estuarine/Riverine Setback (MERS) provision (Article VII, Section 10) of these regulations.

Building Height	Maximum Lot Coverage (Footprint of Building)
1 and 2 stories	40%
3 and 4 stories	35%
5 and 6 stories	30%
7 to 9 stories	25%
10 to 13 stories	20%
Over 13 stories	17%

For lot width, front yard, rear yard, and side yard requirements, see Section 7, D. of this ordinance.

Commercial Uses:

d. Restaurants (including on-premise consumption of alcohol).

e. Appliance repair shops (no outside storage or work permitted).

f. Strip shopping centers.

g. Taverns, cocktail bars and nightclubs.

h. Personal service establishments such as, but not limited to, banks, barber shops, beauty parlors, medical and dental clinics, restaurants including on-premise consumption of alcohol, financial institutions, professional and other offices, shoe repair, tailoring, watch and clock repair, locksmiths and data processing.

i. Retail businesses such as: drug, package, hardware, book, stationery, china and luggage shops, newsstands, photographic supplies and studios and wearing apparel shops.

j. Grocery, fruit, vegetable, meat market, convenience stores and supermarkets, including the sale of beer and wine for off-premise consumption and the incidental sale of gasoline.

k. Off-premise signs, billboards and other sign structures erected, located and maintained as provided for in Article VII, Section 7.

l. Florist shops provided that products are displayed and sold wholly within an enclosed building.

m. Health and fitness clubs.

n. Hospitals and clinics.

o. Interior decorating, home furnishing and furniture stores.

p. Music conservatory, dancing schools and art studios.

q. Music, radio and television shops.

r. Indoor Movie Theaters.

s. Campgrounds.

t. Warehousing (adjacent to and part of retail operation).

u. Boat sales and service facilities.

v. Marinas (without fuel service facilities or sewage pump out stations; See Article VII, Seciton 14).

on the zoning map. The covenant shall run with the land and shall bind all successors in interest.

e. Said restrictions and covenants may be provided by inclusion of said restrictions and covenants in a Final Plat as required under the subdivision regulations or in the condominium documents.

f. Said covenants and restrictions shall be filed in the Official Records of Escambia County before a Certificate of Occupancy may be issued by the Building Inspections Department.

3) Performance Standards. All PUD/SDD projects as well as any development within the SDD District must meet the following standards:

a. No alteration of existing open bodies of water shall be permitted except the alteration of preexisting artificial drainage ditches. During construction turbidity screens or similar devices which have been approved by the County Engineering Department shall be used at all times to minimize siltation, sedimentation and erosion. No construction of artificial bodies of water shall be allowed that degrades the preexisting wildlife habitat or natural hydrological regime.

b. Wastewater, fertilizer-pesticides, or other potential pollutants and sediments shall be prevented from entering directly into water recharge areas or surface waters. A strip of buffer vegetation shall be planted or be retained between the developed area and wetlands (as identified in Section 15, F. 1), to retard the runoff of sediment, chemicals, oils and other pollutants. The buffer strip shall be a minimum width of 15 feet on 0-4% slopes and 25 feet for slopes of 5% or greater if the strip is herbaceous species or mixed woody and herbaceous. If the strip is only woody species (trees and shrubs), the minimum width shall be increased to 30 feet for 0-4% slopes and 50 feet for slopes of 5% or steeper.

c. During development, every precaution shall be taken to prevent the disruption of adjacent water discharge or recharge areas. During construction, turbidity screens or similar devices, which may be approved by the County Engineering Department, shall be used at all times to minimize siltation, sedimentation and erosion. The minimum site area to be disturbed at any time will be that which is necessary for completion of that phase of project construction.

d. To ensure that sediment remains on the site and is not transported into other areas, sediment controls shall be left in place until filled areas are stabilized.

e. Fill shall not be placed within 40 feet of a natural open body of water.

f. Slopes resulting from the placement of fill shall be no steeper than a 3 to 1 (horizontal to vertical) ratio and must be stabilized with appropriate native vegetation to prevent erosion and sedimentation. Other suitable alternatives such as rip-rap may be utilized where native vegetation is unsuitable. Other acceptable alternatives may be aproved by the Enforcing Officer. The stabilization must be completed prior to the issuance of a Certificate of Occupancy.

g. Where vehicle and driveway access is necessary, it shall be sufficiently constructed so that such access

3) Vegetation maps according to the Florida Land Use, Cover and Forms Classification System; or a jursidictional determination as to wetlands areas (if any) and the boundaries of said wetlands (if any) in map format. Maps will be accepted as conditional pending proof of determination by developer if maps are available.

4) Surface water bodies and water courses on site, including a map of existing natural drainage patterns.

e. A detailed description of proposed alterations to existing conditions, including a graphic description, to scale, of the following:

1) Changes in topography by grading, filling or excavating;

2) Areas where vegetation will be cleared or trimmed; and

3) Areas where impervious surfaces will be constructed;

f. A description of any proposed water management system; and

g. A proposed landscaping plan as outlined in Article VII, Section 13;

h. Location and type of utility lines.

i. A vicinity sketch at 400 feet or less to the inch showing surrounding streets, lots and parcels, and natural features;

j. Proposed streets, walkways and parking areas, and proposed materials;

k. Public use areas and whether for common maintenance or for dedication to appropriate public agencies.

l. General provision of public facilities:
(1) Water;
(2) Sewer;
(3) Storm drainage.

m. A description of the physical characteristics of the proposed development including total acreage, number of dwelling units, dwelling unit density, yard and spacing requirements, location of open spaces, and general architectural features and appearances of all buildings;

n. Population densities proposed;

o. Proposed schedule for development.

p. A discussion of the compatible relationship of the proposed PUD to the PUD concept and to adjacent land uses.

The required documentation submissions are in addition to any other information which may be required under other applicable County Ordinances.

q. Construction shall occur in planned stages or increments, not exceeding the minimum area necessary to prepare the site for the next phase of development. Prior to the approval of any site plan, the applicant for the Land Use Certificate shall be required to

beyond the limits of the conical surface, extend a distance of 5,000 feet measured horizontally from the edge of the approach surface and at right angles to the runway centerline.

B. OLF Saufley

Runways 5/24 and 14/32;

1) Primary Surface. The area located on the ground or water, longitudinally centered on each runway and extending 200 feet beyond the runway end, with a width of 1000 feet. Except as provided for in the permitted use sections contained herein, no structure of obstruction that is not a part of the landing and take-off area is permitted in the primary surface.

2) Clear Zone. The area adjacent to the runway end extending outward for 3000 feet with a width of 1000 feet centered on the extended runway centerline. The Type I clear zone is the first 1000 feet adjacent to the end of the runway. The Type III clear zone is the same width, and extends outward 2000 feet from the Type I clear zone on the extended centerline. Except as provided for in the permitted use sections contained herein, no structure or obstruction that is not a part of the landing and take-off area is permitted in the Type I clear zone. Except as provided for in the permitted use sections contained herein, no structure or obstruction shall penetrate the approach departure surface in the Type III clear zone.

3) Inner Horizontal Surface. The area encompassing the runways and primary surface, and clear zones with an outer perimeter formed by swinging arcs 7,500 feet radius about the centerline at the end of each runway and connecting adjacent arcs by lines tangent to these arcs. No structure or obstruction will be permitted in the inner horizontal surface of a greater height than 150 feet above the airport elevation.

4) Conical Surface. The area extending from the periphery of the inner horizontal surface outward and upward at a slope of one foot vertically for every 20 feet for a horizontal distance of 7,000 feet to a height of 500 feet above airport elevation.

5) Outer Horizontal Surface. The area extending outward from the outer periphery of the conical surface for a distance of 30,000 feet. The height limits within the outer horizontal surface is 500 feet above airport elevation.

6) Approach Surface. The area longitudinally centered on each runway extended centerline with an inner boundary 200 feet out from the end of the runway and the same width as the primary surface, then extending outward for a distance of 50,000 feet expanding uniformly in width to 16,000 feet at the outer boundary. Height limits within the approach surface commence at the height of the runway end and increase at the rate of one foot vertically for every 50 feet horizontally for a distance of 25,000 feet at which point it remains level at 500 feet above airport elevation to the outer boundary.

7) Transitional Surface. The area with an inner boundary formed by the side of the primary surface and the approach surface then extending outward at a right angle to the centerline and extended centerline until the height matches the adjoining inner horizontal surface, conical surface and outer horizontal surface height limit. The height limit at the inner boundary is the same as the height limit of the adjoining surface and increases at the rate of one foot vertically for every

1) DER, DNR, COE, Escambia County Health Department and ECUA review and make recommendations and or comments on the project.

2) Findings of the County Staff.

3) Cumulative effect of development.

After review of the above stated criteria by the BOA and BCC, each will make a finding of facts as to the approval or disapproval of the project.

Section 16 - Airport Land Use.

The following are regulations under which development will take place around private and military airports within the unincorporated areas of the County. These specific areas are delineated as Airport Environs and Noise Zones on the Land Use Map Series (for regulation of land use and density), and on the Height Limitation Map for regulation of height limitation. Unless otherwise indicated, the regulations of this section will apply to the Airport Environs Areas and Height Limitation Areas only. Further, there are certain general regulations of this ordinance which apply to this section and they are so noted.

PART I

FINDINGS

These Regulations are adopted pursuant to the authority conferred by Chapters 125, 163 and 333, Florida Statutes. It is hereby found that incompatible land uses have the potential for being hazardous to aircraft operations as well as to the persons and property on the ground in the vicinity of the incompatible land use. Incompatible land use reduces the size of areas available for the landing, taking off and maneuvering of aircraft, thus, tending to destroy or impair the utility of Pensacola Regional, NAS Pensacola, Ferguson and Coastal Airports and OLF Saufley, OLF Bronson, OLF Site 6, OLF Site 8 and Corry Hospital Heliport and the public investment therein. Accordingly, it is declared:

1. That the creation or establishment of incompatible land use around airports is a nuisance and injurious to the region served by the Pensacola Regional, Ferguson and Coastal Airports and NAS Pensacola, OLF Saufley, OLF Bronson, OLF Site 6, OLF Site 8, and Corry Hospital Heliport;

2. That it is necessary in the interest of the public health, public safety, and general welfare that land uses be controlled so as to prevent incompatible land uses around airports. Airport operations produce noise which when certain levels are exceeded is not compatible with residential uses and certain commercial and industrial uses which are not properly soundproofed. It is further declared that both the prevention and creation or establishment of incompatible land uses, structures and the elimination, removal, alteration, mitigation, or marking and lighting of existing airport hazards are public purposes for which the political subdivision may raise and expend public funds and acquire land or interests in land.

PART II

APPLICABILITY

The regulations on land uses set forth herein are applicable to all lands designated as Accident Potential Zones or Noise Zones on the official "Escambia County Airport Zoning Map Series". In addition all of the property as designated on the "Height Limitations Maps" are regulated pursuant to the provisions of this Ordinance for height limitations only. All property outside of the designated Accident Potential Zones or Noise Zones as set forth on the official "Escambia County Airport Zoning Map Series" will be regulated as to land uses by the "Urban Area Land Use Regulations Ordinance". The official maps

11) Alteration. Any construction which would result in a change in height or lateral dimensions of an existing structure.

12) Board of Adjustment. A board which is authorized to perform certain functions (Also known as Escambia County Zoning Board of Adjustment).

13) Clear Zone(NAS Pensacola). A fan shaped area extending outward 3,000 feet from the end of each runway. The inner boundary is the same width as the primary surface and commencing 200 feet from the threshold, expands at an angle of 7 degrees 58 minutes and 11 seconds to a width of 2,284 feet. The Type I clear zone is the first 1,000 feet adjacent to the end of runway. The Type II clear zone is 500 feet wide and extends outward from the Type I clear zone on the extended centerline. The type III clear zone is laterally adjacent to the Type II clear zone. Except as provided for in the permitted use sections contained herein, no structure or obstruction that is not a part of the landing and take-off area is permitted in the Type I, Type II, or Type III clear zones.

14) Clear Zone(OLF Saufley). The area adjacent to the runway end extending outward for 3000 feet with a width of 1000 feet centered on the extended runway centerline. The Type I clear zone is the first 1000 feet adjacent to the end of the runway. The Type III clear zone is the same width, and extends outward 2000 feet from the Type I clear zone on the extended centerline. Except as provided for in the permitted use sections contained herein, no structure or obstruction that is not a part of the landing and take-off area is permitted in the Type I clear zone. Except as provided for in the permitted use sections contained herein, no structure or obstruction shall penetrate the approach departure surface in the Type III clear zone.

15) Construction. The erection or alteration of any structure either of a permanent or temporary character.

16) Day-Night Average Sound Level (Ldn). A basic measure for quantifying noise exposure, namely: The A-weighted sound level averaged over a 24-hour time period, with a 10 decibel penalty applied to night time (10:00 p.m. to 7:00 a.m.) sound levels.

17) Decibel (dB). A unit for measuring the relative loudness of sound or sound pressure equal approximately to the smallest degree of difference of loudness or sound pressure ordinarily detectable by the human ear, the range of which includes about 130 decibels on a scale beginning with 1 for the faintest audible sound.

18) dBA. The unit of noise level measured in accordance with the "A-weighted scale" which replicates the response characteristics of the ear. This scale is a quantity, in decibels, read from a standard sound-level meter with A-weighting circuitry. The A-space weighting discriminates against the lower frequencies according to a relationship approximating, and to more accurately reflect the auditory sensitivity and response of the human ear. The A-scale sound level measures approximately the relative "noiseness" or "annoyance" of many common sounds.

19) Decision Height. The height at which a pilot must decide during an instruction approach (i.e., landing) to either continue the approach or to execute a missed approach and regain altitude.

20) Dwelling Unit. A structure or portion of a structure designed or occupied as self-contained living quarters for one family.

21) Easements. A servitude imposed as a burden on land. Easements regarding airport facilities usually involve a form of right of way above the land together with a restriction applied to the uses to which the land itself may be put in order to avoid interference with airport operations.. Nothing in this Ordinance or in the FAR, Part 77, regulations adopted hereby shall limit,

37) Precision Instrument Runway. A runway having an instrument approach procedure utilizing an instrumented landing system with glide slope information.

38) Runway. A defined area on an airport prepared for landing and takeoff of aircraft along its length.

39) Sanitary Landfill. A site for solid waste disposal.

40) Single-family Dwelling. A structure which is designed for or occupied exclusively as a residence for one family.

41) Special Exception. A use that would not be appropriate generally throughout a particular district, but which, if controlled as to number, area, location, or relations to the neighborhood, would not adversely affect the public health, safety, existing property value and the general welfare.

42) Structure. Any object constructed or installed by man, including but not limited to, buildings, towers, smokestacks, utility poles and overhead transmission lines.

43) Surface. An imaginary geometric plane enclosing an area, penetration into which may be restricted, prohibited or controlled.

44) Tree. Any woody plant.

45) Urban Area. That part of Escambia County, Florida, south of the Tallahassee base line, excluding incorporated areas and those areas presently subject to zoning pursuant to Special Acts of the Legislature including but not limited to areas in the vicinity of the University of West Florida, Santa Rosa Island and Perdido Key.

46) Use. The purpose for which land or a building is arranged, designed, occupied or maintained.

47) Utility Runway. A runway that is constructed for and intended to be used by propeller driven aircraft of 12,500 pounds maximum gross weight.

48) Variance. A modification of these regulations when such modification will not be contrary to the public interest and when, owing to conditions peculiar to the property and not the result of the actions of the applicant, a literal enforcement of the ordinance would result in unnecessary and undue hardship.

49) Visual Runway. A runway intended solely for the operation of aircraft using visual approach procedures and no instrument designation indicated on a FAA approved airport layout plan, a military services approved military airport layout plan, or by any planning document submitted to the FAA by competent authority.

PART IV

HEIGHT LIMITATIONS

In order to carry out the provision of this Ordinance, there are hereby created and established certain airport zones and surfaces. These zones and surfaces are shown on the official "Escambia County Land Use Map Series" and "Height Limitations Maps" which can be viewed at the Escambia County Planning and Development Department, 1190 West Leonard Street, and by reference made a part hereof.

When a lot is divided into sections, the more restrictive height limitations shall apply.

An area located in more than one of the described zones and surfaces is considered to be only in the zone and surface with the more restrictive height limitation.

a) Pensacola Regional

Runway 25 - 4,000 feet. Runways 16/34 and 07 - 16,000 feet.

b) Coastal and Ferguson Airports

1,250 feet.

2) The approach surface extends for a horizontal distance of:

a) Pensacola Regional

Runway 25 - 10,000 feet. Runways 16/34 and 07 - 50,000 feet.

b) Coastal and Ferguson Airports
5,000 feet.

3) The outer width of an approach surface to an end of a runway will be that width prescribed in this subsection for the most precise approach existing or planned for that runway end.

4) Permitted height limitation within the approach surfaces is the same as the inner edge and increases with horizontal distance outward from the inner edge as follows:

a) Pensacola Regional.

Runway 25 - Permitted height increases one foot vertically for every 34 feet of horizontal distance for all non-precision instrument runways other than utility; and

Runways 16/34 and 07 - Permitted height increase one foot vertically for every 50 feet of horizontal distance for the first 10,000 feet and then increase one foot vertically for every 40 feet of horizontal distance for an additional 40,000 feet for all precision instrument runways.

b) Coastal and Ferguson Airports.

Permitted height increases one foot vertically for every 20 feet of horizontal distance for all utility and visual runways. The slope starts at the runway ends.

E. Transitional Surface. The area extending outward from the sides of the primary surfaces and approach surfaces connecting them to the horizontal surface. Height limits of the transitional surface are the same as the primary surface or approach surface at the boundary line where it adjoins and increases at a rate of one foot vertically for every seven feet horizontally, with the horizontal distance measured at right angles to the runway centerline and extended centerline, until the height matches the height of the horizontal surface or conical surface or for a horizontal distance of 5,000 feet from the side of the part of the precision approach surface that extends beyond the conical surface.

2. Military Airports. The various zones, surfaces and height limitations are hereby established for military airports (Attachment B) as follows: Additional maps depicting said zones, surfaces and height limitations are available at the Escambia County Planning and Development Department and by reference, made a part hereof.

A. NAS Pensacola

d) Heliport Transitional Surface. An area that connects the heliport primary surface and the heliport apporach surface, upward and outward of the heliport primary surface at a slope ratio of two feet vertically for every one foot horizontally for a distance of 250 feet from the centerline of the pad.

PART V

AIRPORT ENVIRONS, USES AND SITE AND BUILDING REQUIREMENTS

Number 1 - Airport Environs Area

Certain airport environ areas have been established around each of the airports within the County. These environ areas have been identified through data provided to the County from the United States Navy and City of Pensacola in studies completed by each of the entities for the airfields which they operate. These studies have established accident potential zones and noise zones for each of the airports as follows:

Where an Airport Environs boundary line divides the lot of record into equal sections, the more restrictive zoning classifications shall regulate. If a lot of record is divided into unequal sections the regulations shall be those applicable to the larger section.

A. Military Accident Potential Zones (APZ's) are divided into three types along primary flight paths. The Clear Zone is an area which possesses a high potential for accidents. APZ 1 is the area normally beyond the Clear Zone which possesses a significant potential for accidents. APZ 2 is an area normally beyond APZ 1 which has a measurable potential for accidents.

Accident Potential Zones	Zone Type
A	Clear
B	APZ 1
C	APZ 2

B. Airport Noise Zones are hereby established as follows:

Airport Noise Zones	Ldn Values	Correspond to City of Pensacola Noise Zone
1	65 - 70	A
2	70 - 75	B
3	Greater than 75	C

For Pensacola Regional Airport Noise Zones and for the Land Use objective and limitations applicable thereto within the corporate boundaries of the City of Pensacola, refer to City of Pensacola Ordinance #43-82, or an approved successor, known as the Comprehensive Airport Ordinance.

C. Airport Environs Zones are hereby established as follows:

Area	Characteristics
A	Clear Zone
B3	Accident Potential Zone 1 and Noise Zone 3
B2	Accident Potential Zone 1 and Noise Zone 2
B1	Accident Potential Zone 1 and Noise Zone 1
B	Accident Potential Zone 1

(MERS) Provision (Article VII, Section 10) of these Regulations or 40 feet, whichever is greater.

F. Side Yard Requirements. The minimum side yard on each side shall be 10 percent of the lot width measured at the front building line, however, side yards need not exceed 15 feet on each side. On property abutting an estuarine, riverine or creek system, the setback shall be in accordance with the Marine/Estuarine/Riverine Setback (MERS) Provision (Article VII, Section 10) of these Regulations or 40 feet, whichever is greater.

G. Building Height Requirement. See Part IV, Height Limitations.

3. Landscaping.

See Article VII, Section 13.

4. Signs.

See Article VII, Section 7.

Number 3 - Airport Environ Area B3 (0-3 DU's/acre)

1. Uses Permitted.

A. Single Family dwellings and their customary accessory structures and uses.

B. Mobile (residential) Homes. Replacement and new mobile homes must meet Department of Housing and Urban Development (HUD) certification standards and have a HUD seal attached to the unit.

C. Railroads and Rapid Transit, on grade.

D. Highways and street rights-of-way.

E. Automobile Parking.

F. Communications Facilities.

G. Public utilities (except above ground transmission lines.)

H. Community and Regional Parks. Spectator stands are not permitted.

I. Golf courses and riding stables. Clubhouses are not permitted. Meeting places, auditoriums and similar uses for gatherings of more than 25 people are not permitted.

J. Water based recreation. Clubhouses are not permitted.

K. Agricultural activities, the growing of crops and plants, livestock grazing and customary accessory buildings.

L. Forestry activities.

2. Special Exceptions.

A. Churches with attendant buildings and facilities. Schools or day care facilities which operate on a five day a week basis are not permitted.

B. Industrial and manufacturing uses of the following types:

1) Lumber and wood product
2) Furniture and fixtures
3) Paper and allied product
4) Printing and publishing
5) Distribution warehousing

Commercial Front Yard Requirements. There shall be a front yard having a depth of not less than 15 feet.

Industrial Front Yard Requirements. There shall be a front yard having a depth of not less than 15 feet.

E. Residential Rear Yard Requirements. The minimum rear yard shall not be less than 25 feet in depth. On property abutting an estuarine, riverine or creek, systems, the setback shall be in accordance with the Marine/Estuarine/Riverine Setback (MERS) Provision (Article VII, Section 10) of these Regulations or 30 feet, whichever is greater.

Commercial Rear Yard Requirements. The minimum rear yard shall not be less than 15 feet. On property abutting an estuarine, riverine or creek systems, the setback shall be in accordance with the Marine/Estuarine/Riverine Setback (MERS) Provision (Article VII, Section 10) of these Regulations or 20 feet, whichever is greater.

Industrial Rear Yard Requirements. The minimum rear yard shall not be less than 20 feet. On property abutting an estuarine, riverine or creek systems, the setback shall be in accordance with the Marine/Estuarine/Riverine Setback (MERS) Provision (Article VII, Section 10) of these Regulations or 20 feet, whichever is greater.

F. Residential Side Yard Requirements. The minimum side yard on each side shall be 10 percent of the lot width measured at the front building line, however, side yards need not exceed 15 feet on each side. On property abutting an estuarine, riverine or creek system, the setback shall be in accordance with the Marine/Estuarine/Riverine Setback (MERS) Provision (Article VII, Section 10) of these Regulations or 30 feet, whichever is greater.

Commercial Side Yard Requirements. There shall be a minimum side yard of 10 feet on each side. On property abutting an estuarine, riverine or creek system, the setback shall be in accordance with the Marine/Estuarine/Riverine Setback (MERS) Provision (Article VII, Section 10) of these Regulations or 20 feet, whichever is greater.

Industrial Side Yard Requirements. There shall be a minimum side yard of 10 feet on each side. On property abutting an estuarine, riverine or creek system, the setback shall be in accordance with the Marine/Estuarine/Riverine Setback (MERS) Provision (Article VII, Section 10) of these Regulations or 20 feet, whichever is greater.

G. Building Height Requirement. See Part IV, Height Limitations.

H. Minimum Total Area and Width. No area shall be utilized as an Industrial/Manufacturing Area that does not have a minimum area of five acres and a minimum width at the street right-of-way line of 400 feet.

I. Commercial Screening Adjacent to Residential Areas. Where a lot utilized for a commercial use abuts a side or rear lot line of any residential lot, screening is required. Such screening may be in the form of walls, fences, or landscaping and shall be at least 50% opaque as viewed from any point along said residential lot line. When landscaping is used for screening, the opacity requirements shall be attained within 18 months of the issuance of the Certificate of Occupancy.

Industrial Screening Adjacent to Residential Areas. Where a lot utilized for an industrial use abuts any residential lot, no structure on said lot shall be erected within 75

3. Site and Building Requirements.

A. With the exception of 3. A. Building Requirements, site and buildings requirements shall be the same as in Part V, Number 3 - Airport Environ Area B3.

4. Commercial Off-Street Parking and Loading Requirements.

See Article VII, Section 6.

5. Commercial Traffic Requirements.

A. No entrances or exits shall direct traffic into adjacent residential areas.

6. Landscaping.

See Article VII, Section 13.

7. Signs.

See Article VII, Section 7.

Number 6 - Airport Environ Area B (0-3 Du's/Acre)

1. Uses Permitted.

A. Any use permitted in the preceding area.

2. Special Exceptions.

A. Any special exception allowed in the preceding area.

3. Site and Building Requirements.

A. With the exception of 3. A. Buildings Requirements, site and buildings requirements shall be the same as in Part V, Number 3 - Airport Enviorn Area B3.

4. Commercial Off-Street Parking and Loading Requirements.

See Article VII, Section 6.

5. Commercial Traffic Requirements.

A. No entrances or exits shall direct traffic into adjacent residential areas.

6. Landscaping.

See Article VII, Section 13.

7. Signs.

See Article VII, Section 7.

Section 7 - Airport Environ Area C3 (0-3 Du's/Acre)

1. Uses Permitted.

A. Any use permitted in the preceding area.

B. Public utilities including above ground transmission lines.

C. Governmental services. Meeting places, auditoriums and similar uses for gatherings of more than 25 people are not permitted.

D. Golf courses and riding stables. Clubhouses are not permitted. Meeting places, auditoriums and similar uses for gatherings of more than 50 people are not permitted.

D. Residential Front Yard Requirements. There shall be a front yard having a depth of not less than 25 feet provided that in blocks where 50 percent or more of the lots are developed, the front yard required shall be the average setback of the dwellings already constructed.

Commercial Front Yard Requirements. There shall be a front yard having a depth of not less than 15 feet.

Industrial Front Yard Requirements. There shall be a front yard having a depth of not less than 15 feet.

E. Residential Rear Yard Requirements. The minimum rear yard shall not be less than 25 feet in depth. On property abutting an estuarine, riverine or creek systems, the setback shall be in accordance with the Marine/Estuarine/Riverine Setback (MERS) Provision (Article VII, Section 10) of these Regulations or 30 feet, whichever is greater.

Commercial Rear Yard Requirements. The minimum rear yard shall not be less than 15 feet. On property abutting an estuarine, riverine or creek systems, the setback shall be in accordance with the Marine/Estuarine/Riverine Setback (MERS) Provision (Article VII, Section 10) of these Regulations or 20 feet, whichever is greater.

Industrial Rear Yard Requirements. The minimum rear yard shall not be less than 20 feet. On property abutting an estuarine, riverine or creek systems, the setback shall be in accordance with the Marine/Estuarine/Riverine Setback (MERS) Provision (Article VII, Section 10) of these Regulations or 20 feet, whichever is greater.

F. Residential Side Yard Requirements. The minimum side yard on each side shall be 10 percent of the lot width measured at the front building line, however, side yards need not exceed 15 feet on each side. On property abutting an estuarine, riverine or creek system, the setback shall be in accordance with the Marine/Estuarine/Riverine Setback (MERS) Provision (Article VII, Section 10) of these Regulations or 30 feet, whichever is greater.

Commercial Side Yard Requirements. There shall be a minimum side yard of 10 feet on each side. On property abutting an estuarine, riverine or creek system, the setback shall be in accordance with the Marine/Estuarine/Riverine Setback (MERS) Provision (Article VII, Section 10) of these Regulations or 20 feet, whichever is greater.

Industrial Side Yard Requirements. There shall be a minimum side yard of 10 feet on each side. On property abutting an estuarine, riverine or creek system, the setback shall be in accordance with the Marine/Estuarine/Riverine Setback (MERS) Provision (Article VII, Section 10) of these Regulations or 20 feet, whichever is greater.

G. Building Height Requirement. See Part IV, Height Limitations.

H. Minimum Total Area and Width. No area shall be utilized as an Industrial/Manufacturing Area that does not have a minimum area of five acres and a minimum width at the street right-of-way line of 400 feet.

I. Commercial Screening Adjacent to Residential Areas. Where a lot utilized for a commercial use abuts a side or rear lot line of any residential lot, screening is required. Such screening may be in the form of walls, fences, or landscaping and shall be at least 50% opaque as viewed from any point along said residential lot line. When landscaping is used for screening, the opacity requirements shall be

2. Special Exceptions.

A. Any special exception allowed in the preceding area.

3. Site and Building Requirements.

A. With the exception of 3. A. Building Requirements, site and building requirements shall be the same as in Part V, Number 7 - Airport Environ Area C3.

4. Commercial Off-Street Parking and Loading Requirements.

See Article VII, Section 6.

5. Commercial Traffic Requirements.

A. No entrances or exits shall direct traffic into adjacent residential areas.

6. Landscaping.

See Article VII, Section 13.

7. Signs.

See Article VII, Section 7.

Section 10 - Airport Environ Area C (0-3 DU's/acre)

1. Permitted Uses.

A. Any use permitted in the preceding area.

2. Special Exceptions.

A. Any special exception allowed in the preceding area.

3. Site and Building Requirements.

A. With the exception of 3. A. Building Requirements, site and building requirements shall be the same as in Part V, Number 7 - Airport Environ Area C3.

4. Commercial Off-Street Parking and Loading Requirements.

See Article VII, Section 6.

5. Commercial Traffic Requirements.

A. No entrances or exits shall direct traffic into adjacent residential areas.

6. Landscaping.

See Article VII, Section 13.

7. Signs.

See Article VII, Section 7.

Number 11 - Airport Environ Area 3 (0-3 DU's/acre)

1. Permitted Uses.

A. Any use permitted in the preceding area.

B. Multi-family dwellings (governed under lot coverage provisions as to density.)

C. Group quarters.

D. Government services.

Building Height	Maximum Lot Coverage
1 and 2 stories	55%
3 and 4 stories	50%
5 and 6 stories	45%
7 to 9 stories	40%
10 to 13 stories	35%
over 13 stories	30%

Industrial Lot Coverage. The maximum combined area occupied by all principal and accessory buildings shall not exceed 50 percent of the total lot area, except as provided for in the Escambia County Lot Coverage Ordinance No. 85-29, as amended, or any duly authorized successor ordinance.

C. Residential Lot Width. The minimum lot width at the front building line shall be 80 feet and at the street right-of-way 50 feet. Every cul-de-sac shall have a minimum of 20 feet at the street right-of-way.

Commercial Lot Width. There shall be no minimum lot width.

Industrial Lot Width. There shall be no minimum lot width.

D. Residential Front Yard Requirements. There shall be a front yard having a depth of not less than 25 feet provided that in blocks where 50 percent or more of the lots are developed, the front yard required shall be the average setback of the dwellings already constructed.

Commercial Front Yard Requirements. There shall be a front yard having a depth of not less than 15 feet.

Industrial Front Yard Requirements. There shall be a front yard having a depth of not less than 15 feet.

E. Residential Rear Yard Requirements. The minimum rear yard shall not be less than 25 feet in depth. On property abutting an estuarine, riverine or creek systems, the setback shall be in accordance with the Marine/Estuarine/Riverine Setback (MERS) Provision (Article VII, Section 10) of these Regulations or 30 feet, whichever is greater.

Commercial Rear Yard Requirements. The minimum rear yard shall not be less than 15 feet. On property abutting an estuarine, riverine or creek systems, the setback shall be in accordance with the Marine/Estuarine/Riverine Setback (MERS) Provision (Article VII, Section 10) of these Regulations or 20 feet, whichever is greater.

Industrial Rear Yard Requirements. The minimum rear yard shall not be less than 20 feet. On property abutting an estuarine, riverine or creek systems, the setback shall be in accordance with the Marine/Estuarine/Riverine Setback (MERS) Provision (Article VII, Section 10) of these Regulations or 20 feet, whichever is greater.

F. Residential Side Yard Requirements. The minimum side yard on each side shall be 10 percent of the lot width measured at the front building line, however, side yards need not exceed 15 feet on each side. On property abutting an estuarine, riverine or creek system, the setback shall be in accordance with the Marine/Estuarine/Riverine Setback (MERS) Provision (Article VII, Section 10) of these Regulations or 30 feet, whichever is greater.

Commercial Side Yard Requirements. There shall be a minimum side yard of 10 feet on each side. On property abutting an estuarine, riverine or creek system, the setback shall be in accordance with the Marine/Estuarine/Riverine Setback (MERS) Provision (Article VII, Section 10) of these Regulations or 20 feet, whichever is greater.

3. Site and Building Requirements.

   A. Site and building requirements shall be the same as in Part V, Number 11 - Airport Environ Area 3.

4. Commercial Off-Street Parking and Loading Requirements.

   See Article VII, Section 6.

5. Commercial Traffic Requirements.

   A. No entrances or exits shall direct traffic into adjacent residential areas.

6. Landscaping.

   See Article VII, Section 13.

7. Signs.

   See Article VII, Section 7.

Number 13 - Airport Environ Area 1 (0-3 DU's/acre)

1. Permitted Uses.

   A. Any use permitted in the preceding area.

   B. Nature exhibits.

2. Special Exceptions.

   A. Any special exception allowed in the preceding area.

3. Site and Building Requirements.

   A. With the exception of 3. A. Building Requirements, site and building requirements shall be the same as in Part V, Number 11, Airport Environ Area 3.

4. Commercial Off-Street Parking and Loading Requirements.

   See Article VII, Section 6.

5. Commercial Traffic Requirements.

   A. No entrances or exits shall direct traffic into adjacent residential areas.

6. Landscaping.

   See Article VII, Section 13.

7. Signs.

   See Article VII, Section 7.

PART VI

USES INTERFERING WITH AIRCRAFT

It is unlawful to establish, maintain or continue any use within the County in such a manner as to interfere with the operation of aircraft. The following requirements shall apply to all lawfully established uses within the County.

1. All lights or illumination used in conjunction with street, parking, signs or use of land and structures shall be arranged and operated in such a manner that is not misleading or dangerous to aircraft operating from an airport or in a vicinity thereof as determined by the airport operator.

4. Nothing in this ordinance will require that nonconforming property be brought into conformance upon sale or exchange of ownership of nonconforming property.

5. In the event that a nonconforming use or nonconforming structure has been abandoned for a period of 365 days, the structure or use shall not be resumed, repaired or reconstructed except in conformance with all applicable regulations.

6. Mobile homes in place at the time of adoption of this Ordinance may be converted into a permanent single-family dwelling unit (or another mobile home) provided that the total number of single-family dwelling units does not exceed the number of mobile homes being replaced (i.e., one mobile home may be replaced by one single family dwelling unit).

7. A nonconforming use may be sold and utilized as a nonconforming use as long as said use continues to meet the requirements specified in this Ordinance for the continuation for a nonconforming use (i.e., the use is not expanded, structurally altered, increased or otherwise made to become a greater hazard to air navigation than it was when it became a nonconforming use). In addition, the nonconforming use must not be abandoned for a period of 365 days.

8. Whenever a nonconforming use is destroyed by fire of act of God, said structure may be reconstructed given the following:

   A. The structure is built to the same size as the building or structure which was destroyed;

   B. The same use which was previously conducted is reestablished.

9. Necessary maintenance and repairs may be made to any nonconforming building or structure or use provided that said activity does not involve the expansion or enlargement of the size of the building, structure or use. For purposes of this provision, maintenance shall be defined as the normal and routine repair of a building, structure or use.

PART VIII

PLATTED PROPERTY

Property that is platted at the time of adoption of this Ordinance (a recorded plat is one that has been approved by the Board and registered in the Clerk's Office of the County Comptroller) will be allowed to be developed at the density as prescribed in the recorded plat. Said property may be in single or joint ownership.

PART IX

LAND USE CERTIFICATE

1. No new structure or use may be constructed or established or any existing use or structure changed or altered or repaired within the Airport Hazard Area unless a Land Use Certificate has been obtained from the Enforcing Officer. A Land Use Certificate fee may be charged if a fee schedule is adopted by the Board of County Commissioners. Each application for a Land Use Certificate shall indicate the purpose for which the Land Use Certificate is desired with sufficient particularity to permit a determination as to whether the resulting use, structure or growth would conform to the regulations herein prescribed. If the determination is affirmative the Land Use Certificate shall be issued. No Land Use Certificate shall be issued that will allow the creation of an airport hazard. Said Land Use Certificate shall be obtained prior to issuance of a Building Permit.

of this ordinance. Approved commercial project Site and Building Plans for which building permits have not been obtained within one year from the effective date must be in compliance with this ordinance.

PART X

SPECIAL APPROVAL

Special approval by the Board of County Commissioners will be required for the establishment of all major utilities (i.e., sewage treatment facilities, lift stations of 1,000 gpm capacity of greater, elevated water storage, water supply wells, electric generating station, gas pumping station and any type of utility substation) prior to issuance of any land use certificates or building permits.

PART XI

ZONING BOARD OF ADJUSTMENT

Number 1 - Establishment and Procedure.

See Article VIII, Section 1, for Establishment and Procedures. Special Exceptions, Variances, and Appeals criteria as herein set forth will only be applicable to Article VI, Section 16, Airport Land Use. No rezoning will be considered for property regulated under Article VI, Section 16, Airport Land Use.

Number 2 - Powers and Duties.

The Zoning Board of Adjustment shall have the following jurisdiction and authority:

Special Exceptions.

The Zoning Board of Adjustment is authorized to conduct all necessary public hearings and to approve or disapprove only such special exceptions, as specifically authorized by this Ordinance. The Zoning Board of Adjustment may decide: 1) such questions as are involved in determining whether special exceptions should be granted; 2) to grant special exceptions with such conditions and safeguards as are appropriate under this Ordinance; or 3) to deny special exceptions when not in harmony with the purpose and intent of this Ordinance. A special exception shall not be granted by the Zoning Board of Adjustment unless said Board finds:

1. A written application for a special exception is submitted indicating the section of this Ordinance under which the special exception is sought and stating the grounds on which it is requested.

2. A public hearing shall be held by the Zoning Board of Adjustment. The owner of the property for which special exception is sought or agent of the owner, and the owners of property within 500 feet of the affected property (as well as, the airport authorities of the airport concerned) shall be notified by regular mail, at least 10 days prior to the public hearing. Notice of such hearing shall be posted in a conspicuous spot on the property for which special exception is sought 10 days prior to the public hearing. The applicant shall deposit with the Board of County Commissioners an amount to be determined by the Board of County Commissioners from time to time, to cover the cost of hearing, publication and distribution of notice.

3. The Zoning Board of Adjustment shall hold all required public hearings. Any party may appear in person or be represented by agent or attorney.

4. Before any special exception shall be issued, the Zoning Board of Adjustment shall make written findings certifying compliance with the specific rules governing individual special exceptions, and that satifactory provision and arrangement have been made concerning the following where applicable:

3. At the time of filing, the applicant shall forward a copy of his application for variance by certified mail return receipt requested to the Florida Department of Transportation, Bureau of Aviation, M.S. 46, 605 Suwannee Street, Tallahassee, Florida 32399-450. The department shall have 45 days from receipt of the application to provide comments to the applicant and the Zoning Board of Adjustment after which time that right is waived. Additionally, no application for a variance may be considered unless the applicant shows evidence the requirment for Notice of Construction or Alteration under 14 Code of Federal Regulations Part 77 has been complied with. No application for a variance to the requirements of this Ordinance may be considered by the Zoning Board of Adjustment unless a copy of the application has been furnished to the Enforcing Officer. The Zoning Board of Adjustment may proceed with consideration of an application only upon receipt of Department of Transportation comments or the waiver of that right as demonstrated by the applicant's filing a copy of a return receipt showing 45 days have elapsed.

4. Such variances shall be allowed where a literal application or enforcement of the regulations would result in practical difficulty or unnecessary hardship and the relief granted would not be contrary to the public interest but do substantial justice and be in accordance with the spirit of these regulations.

5. The Zoning Board of Adjustment is authorized to hear and to approve or disapprove variances as specifically authorized by these regulations. The Zoning Board of Adjustment may impose such conditions and restrictions upon the premises benefited by a variance as may be necessary to prevent injurious effects upon other property in the neighborhood and to better carry out the general intent of this Ordinance.

   A. Condition. No variance in the application in the provisions of this Ordinance shall be made or granted by the Zoning Board of Adjustment unless said Board shall find:

      1) That there are exceptional circumstances or conditions applicable to the property that do not apply generally to other property in the same vicinity and airport environ area.

      2) That such variance is necessary for the preservation and enjoyment of a substantial property right possessed by other property in the same vicinity and airport environ area, but which is denied to the property in the request.

      3) That the granting of such variance will not be injurious to the property or improvements in such vicinity and airport environ area in which the property in question is located or otherwise detrimental to the public welfare.

      4) That the variance, if granted, will not have the effect of defeating the objectives for which this Ordinance was enacted as set forth in Article VI, Section 16, Part I by permitting the population density, noise level limitations or height restrictions to be unreasonably exceeded or result in a significant increase in danger to aircraft, passengers and crew operating in the airspace over the property affected.

   B. The Zoning Board of Adjustment shall make findings that the requirements above have been met by the applicant for variance.

   C. The Zoning Board of Adjustment shall further make a finding that the reasons set forth in the application justify the granting of a variance, and that the variance is the minimum variance that will make possible the use of the land, building or structure.

There shall be no maximum height for fences in commercial district except that barbed wire is permitted only on top of a solid or chain fence at least six feet in height.

Where a commercial district is adjacent to a residential district, a fence may be constructed to a maximum height of eight feet on the property line contiguous to the commercial district.

Section 6 - Parking

Offstreet parking shall be required in all districts. Ground level or multi-level parking structures (where appropriate) shall be utilized in meeting such requirements. The number of parking spaces required by this section may be reduced to the extent necessary to comply with Article VII, Section 13, Landscaping, of this ordinance and the Tree Ordinance.

1) Residential Districts - One and two-family dwellings, one space for each dwelling unit; multiple family dwellings, one and one-half spaces for each dwelling unit.

2) Office Buildings - One space for each 300 square feet of gross floor area in the building.

3) Medical or Dental Clinics and Offices - Four spaces for each doctor engaged at the clinic or office, plus one space for each two employees.

4) Schools - Elementary and Middle Schools - One space for each two employees, plus one space for each classroom; high schools, one space for each ten students based on design capacity of the schools, plus one space for each two employees.

5) Private Clubs, Fraternities, Sororities and Lodges - One parking space for each 200 square feet of gross floor area.

6) Libraries, Community Centers and other buildings serving the general public - One space for each 500 square feet of gross floor area in the building, plus one space for each two employees.

7) Retail and Commercial (other than those specifically cited in this section):

Parking Requirements for Buildings:

Up to 2,000 sq. ft.	One space for each 200 square feet of building area
2,001 to 4,000 sq. ft.	One space for each 300 square feet of area
4,001 to 10,000 sq. ft.	One space for each 400 square feet of building area
Above 10,000 sq. ft.	One space for each 500 square feet of building area with a minimum of 25 spaces required

When a building includes retail/commercial plus warehouse space, the parking requirement for each type space of use shall apply for that portion of the building.

8) Distribution Warehouse Facilities (not used for public display or merchandise). One and one-half spaces for each employee involved in warehousing operations.

9) Churches, Theaters and Restaurants - One space for each four seats plus one space for each three employees.

10) Handicapped Parking - One handicapped space for each 25 spaces required by this section, reserved and marked as handicapped parking.

Section 2 - Nonconforming Uses

The lawful use of a building, structure or land use existing as of the date of adoption of these Regulations shall not be affected by these Regulations although the existing use may not conform to these Regulations.

No structural alterations shall be made to a building, structure or use which is by definition as herein specified nonconforming , except those required by law or ordinance, or ordered by an authorized official to secure the safety of the building of the occupants. If such nonconforming building, structure or use is removed or discontinued for a continuous period of 365 days, any future use of the building or structure, or use shall be in conformity with these Regulations. Any building, structure or use not conforming to these Regulations which is rebuilt or substantially altered shall conform to all applicable County Codes, Ordinances and the requirements of these Regulations.

When a nonconforming use is destroyed by fire or act of God, said structure may be reconstructed given the following:

A. The structure is built to the same or smaller size as the building or structure which was destroyed.

B. The same use which was previously conducted is re-established.

C. The building or structure is replaced within 365 days.

When an existing building or structure is a permitted use within the Land Use District in which it is located but is considered nonconforming because of setbacks, said building or structure may be expanded into the available setback area(s) (side, rear and/or front) as long as required setbacks are not violated.

No nonconforming building shall be enlarged to cover a greater area of land than that occupied or be expanded to include more floor area than on the date of adoption of these Regulations, with the exception of a replacement mobile home provided that the required setbacks and yard requirements of the Zoning District in which it is placed are met.

Necessary maintenance and repairs may be made to any nonconforming building or structure or use provided that said activity does not involve the expansion or enlargement of the size of the building, structure or use. For purposes of this provision, maintenance shall be defined as the normal and routine repair of a building, structure or use.

Mobile homes in place at the time of adoption of this Ordinance may be replaced with another mobile home provided that the replacement is done on a one for one basis (one mobile home is replaced by only a one family mobile home). A replacement mobile home must meet Department of Housing and Urban Development (HUD) certification standards and have a HUD seal attached to the unit.

All Preliminary Plats and Lot Coverage Submittal Packages for commercial projects which have been received and logged into the Engineering Department by December 31, 1988, will be honored based upon current regulations. Any Preliminary Plats and Lot Coverage Submittal Packages for commercial projects which have been received and logged into the Engineering Department after December 31 1988, are required to comply with these zoning regulations. [redacted] Any final plat received in the Engineering Department later than November 30. 1989, for which a preliminary plat was submitted by December 31 1988, must be in compliance with these zoning regulations. A Building Permit must be obtained from the Building Inspections Department for approved commercial project Site and Drainage Plans, which were submitted by December 31 1988, by November 30, 1989. Approved commercial project Site and Building Plans for which Building Permits have not been obtained by November 30, 1989 must be in compliance with this ordinance.

Loading and unloading areas shall be so located and designed that the vehicles intended to use them can 1) maneuver safely and conveniently to and from a public right-of-way, and 2) complete the loading and unloading operations without obstructing or interfering with any public right-of-way or any parking space or parking lot aisle.

No area allocated to loading and unloading facilities may be used to satisfy the area requirements for off-street parking, nor shall any portion of any off-street parking area be used to satisfy the area requirements for loading and unloading facilities.

Whenever 1) there exists a lot with one or more structures on it constructed before the effective date of this chapter, and 2) a change in use that does not involve any enlargement of a structure is proposed for such lot, and 3) the loading area requirements of this section cannot be satisfied because there is not sufficient area available on the lot that can practicably be used for loading and unloading, then the developer need only comply with this section to the extent reasonably possible.

Section 7 - Signs

Signs must be in accordance with the Escambia County Sign Ordinance, No. 88-18 or any duly authorized successor ordinance.

Section 8 - Planned Unit Developments (PUD)

Planned Unit Developments are allowed in any District except Special Development District as a Special Exception and shall comply with the following guidelines:

1) Purpose

The intent of the PUD regulations is to permit greater flexibility and more creative and imaginative design for the development of land. It is further intended to promote more economical and efficient use of land while providing a harmonious variety of housing choices, a higher level of amenities, and preservation of natural scenic qualities of open spaces.

2) Uses Permitted

Proposed uses of land shall be compatible within the PUD and the project shall be compatible with the permitted uses in the surrounding Land Use District. Any use permitted in the Districts of these Regulations shall be permitted in a PUD subject to the criteria established by these Regulations. Applicant shall submit a specific Development Plan.

3) Development Plan Criteria

The PUD must:

(a) Be compatible with the adjacent land uses, by the inherent nature of the PUD and/or by the use of screening and buffering.

(b) Provide adequate vehicular and pedestrian circulation systems.

(c) Provide adequate off-street parking.

(d) Provide adequate open space and recreational area.

(e) Provide adequate water, electric, sewerage and fire protection service.

(f) Demonstrate that the project will be a sound, well-planned development.

(e) Mandatory Review of PUD. The PUD approval shall be valid for a period of (18) eighteen months. If construction has not commenced within eighteen months from the date of approval, the PUD approval shall expire. An extension to the eighteen month period may be granted if prior to the expiration of the PUD approval the developer requests and establishes for good cause that such extension is necessary. Extensions shall be granted for a period not to exceed eighteen months. Application for extension shall be made to the Enforcing Officer for Zoning Board of Adjustment recommendation and Board of County Commission approval.

(f) Final Plan.

1. Three copies of a final plan for record shall be prepared by the developer and submitted to the County Engineer before any lots, dwelling units or structures are leased or sold. The County Engineer shall certify that the final plan is in substantial conformance with the preliminary plan, and shall submit it to the Board of County Commissioners for their approval.

2. The final plan may be combined with a final plat under the Subdivision Regulations, in which case, all restrictions on the PUD shall be included as Restrictive Covenants on or attached to the final plat.

3. All major modifications that are not in substantial conformity with the approved plan are subject to the same procedure as an original PUD.

Section 9 - Height and Area Special Exceptions

The following requirements or regulations qualify or supplement the District requirements appearing elsewhere in these Regulations.

1) Commercial and industrial buildings where permitted in a district may be increased in height when the building is set back from the required yard lines one foot for each three feet such building exceeds the height limit otherwise provided in the district in which the building is built.

2) Chimneys, penthouses, scenery lofts, elevator bulkheads, stacks, ornamental towers or spires, wireless or broadcasting towers, antennas, monuments, cupolas, domes, steeples, false mansards, parapet walls, similar structures, and necessary mechanical appurtenance may exceed required maximum heights in any district, except an airport environs area. Freestanding chimneys, stacks, wireless or broadcasting towers shall not be allowed in residential districts.

3) Public or semi-public buildings, hospitals, sanitariums, schools and churches or temples where permitted in a district may be increased in height when the front, rear and side yards are increased an additional foot for each foot such building exceeds the height limit otherwise provided in the district in which the building is built.

4) Every part of a required yard shall be open from its lowest point to the sky unobstructed except for the ordinary projection of sills, belt courses, cornices, buttresses, ornamental features and eaves provided that none of the above projections shall project into a minimum side yard more than 24 inches.

provide the County with documentation showing approval from the Florida Department of Environmental Regulation/Army Corps of Engineers and the Florida Department of Natural Resources before a Land Use Certificate is issued.

b. If the applicant requests siting of a structure or conducting an activity prohibited by this Ordinance waterward of the MERS line by no more than 15 feet and the possibility exists that no wetlands or highly eroding lands are present between the MERS line and the water's edge, as determined by a Wetlands Inventory Map or a copy of the most current Federal Emergency Mangement Agency Floodway Flood Boundary and Floodway Map or an on-site inspection. The applicant will be required to provide the County with documentation showing approval from the Florida Department of Environmental Regulation/Army Corps of Engineers and the Florida Department of Natural Resources before a Land Use Certificate is issued.

2) The use of natural means, i.e. vegetation and beach renourishment, shall be used to stabilize erosion prone areas and shall be designed and implemented in accordance with sound environmental and engineering practice. Natural erosion control methods create a buffer zone providing for a greater chance of natural recovery, the normal progress of natural processes, and the entrapment of sediment laden waters.

a. The vegetation used in erosion control methods shall be those indigenous to the region.

b. Site grading, excavating or other activities which significantly disturb the property shall be allowed waterward of the MERS line only if consistent with the intent of this ordinance.

c. Applicants are encouraged to place all structures, except those which are water dependent, as far landward of the MERS line as practical.

d. Enhancement or shore protection structures shall be placed as specified in subsection 3)b.2) below. If not specified, the location of the structure will be determined by a registered Professional Engineer knowledgeable in coastal processes or by guidelines established by the U.S. Army Corps of Engineers, "Shore Protection Manual" and shall be consistent with the provisions of this subsection.

3) Rigid shore protection structures shall not be permitted waterward of the Mean High Water line. The use of rigid shore protection structures may cause significant environmental impacts. These impacts can result in increased overland runoff, loss of valuable topsoil, increased water turbidity, loss of wildlife habitat, and the loss of the natural amenity associated with shoreline areas. If available coastal engineering data indicates that rip-rap, sloping revetments, small breakwaters, short groins and other beach enhancement structure methods in combination with revegetation, are the only effective means to protect an area, and all state and federal permits are obtained, the proposed device will be evaluated on a case-by-case basis with a variance required from the Board of County Commissioners. Where applicable, the decision to grant a variance shall be based on guidelines established by the U.S. Army Corps of Engineers, "Shore Protection Manual" or data provided by a registered Professional Engineer knowledgeable in coastal processes, the choice of which is at the sole discretion of the County Commissioners.

federal agencies, and meet all state and federal regulations.

a. If more than fifty percent of a shore protection structure must be replaced, the provisions of this Ordinance shall apply.

b. An abandoned seawall or bulkheading shall be removed by the owner within a reasonable period of time as specified by the County Building Official.

5) Beach access shall be maintained to the greatest extent practical.

6) Section 10 shall not be construed as to prevent the doing of any act necessary to prevent material harm to or destruction of real or personal property as a result of a present emergency (as defined by Chapter 16B-33, F.A.C.) and the necessity of obtaining a permit is impractical and would cause undue hardship in the protection of life and property.

a. A report of any such emergency action shall be made to the County Building Official or County Engineer by the owner or person in control of the property upon which emergency action was taken as soon as practicable, but no more than ten calendar days following such action. Remedial action may be required by the County Building Official or County Engineer subject to appeal to a Board of County Commissioners in the event of a dispute.

7) The Board of Adjustment (BOA), as established by Escambia County, shall hear and make recommendations to the Board of County Commissioners who shall decide appeals and requests for variance from the requirements of this Section as provided for by Article VIII of this Ordinance.

Section 11 - Mobile Homes, Mobile Home Parks, Mobile Home Subdivisions

1) Mobile Homes on Individual Lots. A mobile home is permitted for residential use in any R-5 District and shall meet all minimum requirements for a Single-Family residence in an R-5 District. A mobile home shall not be stored or parked on any public street or alley within any Residential District (R-1 thru R-6).

2) Mobile Home Parks. A Mobile Home Park is a Special Exception in any R-5 District and a permitted use in any R-6 District. A Mobile Home Park shall have a minimum of six mobile home stands (spaces). No stand may be occupied until six stands are completed and ready for occupancy. In addition to compliance with applicable State Statutes and Administrative Rules for Mobile Home Parks, the following shall apply:

a) All necessary State of Florida Permits, Certificates and approvals for development and operation of a proposed Mobile Home Park shall be obtained prior to request for a Land Use Certificate for that development.

b) An application for a Land Use Certificate to develop a Mobile Home Park shall be accompanied by a development plan drawn to scale, prepared by a registered land surveyor or professional engineer showing:

1. Location and legal description of the proposed Mobile home Park, name and address of owner and owners of adjacent tracts.

10) *Maintenance and Drainage Easements.* A perpetual four foot wall-maintenance easement shall be provided on the lot adjacent to the zero lot line property line, which, with the exception of walls and/or fences, shall be kept clear of structures. This easement shall be shown on the plat and shall be incorporated into each deed transferring title to the property. The wall shall be maintained in its original color and treatment unless otherwise agreed to in writing by the affected lot owners. Roof overhangs may penetrate the easement on the adjacent lot a maximum of twenty four inches, but the roof shall be so designed that water runoff from the dwelling placed on the lot line is limited to the easement area.

11) *Parking.* A minimum of one off-street parking spaces shall be provided on each platted lot.

Section 13 - Landscaping

Landscaping is required under this section for all development except construction of residential structures containing four dwelling units or less, and agricultural uses. Except for the above, prior to the issuance of any Land Use Certificate a plot plan shall be submitted to and approved by the Enforcing Officer. The plan shall be drawn to scale showing the landscaped area required by this section, including the calculations made to meet the minimum landscape area requirements.

A minimum of ten percent of any parcel to be developed which comes within the provisions of this section shall be devoted to landscape material. The areas herein provided for buffering between land use districts and incompatible development shall not be included in the overall ten percent requirement. The area covered by the crown of any protected tree shall count toward said ten percent (10%) requirement. Retention/detention ponds with a depth of three (3) feet or less shall qualify as landscape area.

1) Landscaping Standards.

To ensure attainment of the objectives of this Ordinance and to ensure that design standards will be met, the performance of development activities and revegetation of altered sites shall be consistent with the following standards:

a) Development shall not involve the unnecessary removal of any native vegetation. Where removal of native trees is necessary, efforts shall be made to transplant those trees, where feasible.

b) Site alteration shall occur in planned stages or in increments, not exceeding the minimum area necessary to prepare the site for the next phase of development. Prior to the approval of any site alteration, the developer of a project shall be required to provide the necessary assurances that the land will be restored to its state prior to alteration or to be stabilized if the development is not completed.

c) Adequate wind and water erosion control measure shall be put into effect prior to commencing site alteration on each increment of a project.

d) Landscaping shall largely utilize native or non-competing exotic plant species. Landscaping shall not utilize any exotic vegetation which is likely to out-compete or otherwise displace native vegetation, or require excessive use of fertilizers and water to maintain growth.

e) Developers of subdivisions shall be allowed to provide shade trees along all streets and pedestrian

b) The following relationships between land uses shall be considered incompatible and require a buffer yard:

1) Multiple-Family, Zero Lot Line and Office Uses - Where adjacent to single-family or two-family uses.

2) Commercial Land Uses - Where adjacent to residential uses.

3) Industrial Land Uses - Where adjacent to residential, office, agricultural and commercial uses.

c) For buffers between incompatible zoning districts, the property owner, lessee, or agent requesting approval of the site plan for a building permit shall be responsible for providing a buffer yard or yards, regardless of the land use intensity permitted in the zoning district in which the proposed development is located. This responsibility shall also apply to properties which are proposed for development and adjacent to a vacant parcel in an incompatible zone.

For buffers between incompatible uses within a cumulative zone, such developments adjacent to a vacant parcel shall not be responsible for providing the buffer requirement. The development within the cumulative zone creating the incompatible use relationship shall be responsible for providing the buffer.

d) Where such incompatible zoning districts or uses abut, a ten foot buffer strip shall be required. Said buffer strip shall extend the entire length of the common incompatible district or use boundaries. The planting area within this required buffer yard shall not be allowed to be credited toward the ten percent minimum landscape area.

e) A visual screen of vegetation running the entire length of all common boundaries shall be installed within the buffer strip. Such vegetation shall provide a minimum of seventy-five percent opacity for that area between the finished grade level at the common boundary line and six feet above said level and horizontally along the length of all common boundaries within three years of planting.

All landscaping shall be installed in a sound workmanlike manner and according to generally accepted good planting practices. Adequate irrigation is required. The type of vegetation used in complying with these requirements shall be indigenous or of a non-competing exotic species.

Any vegetation that dies, becomes diseased or is damaged by vehicular traffic, Acts of God or vandalism must be replaced within thirty days after notification of a violation of this section of the Ordinance.

4) Visual Clearance Along Rights-of-Way and at Sight Triangles Intersections.

The following areas shall be designed and maintained to allow visibility between three feet and nine feet above grade. (Tree trunks trimmed of foliage to nine feet, and newly planted material with immature crown development allowing visibility are exempt):

2) Non-water dependent facilities such as restaurants and bait-and-tackle shops are situated on uplands, except where the location of such facilities over public lands has been permitted by applicable local, state and federal agencies.

3) The general area, on-site, and adjacent roadways have the capacity to accommodate the projected vehicular traffic associated with the marina.

4) Adequate capacity to accommodate the anticipated volume of sewage and the ability to handle the waste in accordance with state standards, either by means of on-site pump-out and treatment facilities or connection to a treatment plant. All marinas with fuel facilities shall provide pump-out facilities at each fuel dock. Commercial marinas and those which serve live-aboard or overnight transient traffic shall provide upland sewage facilities. Facilities of 100 slips or more shall provide permanent pump-out facilities.

5) Capability of applicants to respond to and contain any petroleum or hazardous material spills within the boundaries of the owned or leased area.

6) The capacity to provide maximum practicable protection of the contents of the proposed premises from damages caused by wind and wave forces resulting from hurricanes. Structures shall comply with all applicable coastal construction codes. Applicants shall also demonstrate the ability to evacuate persons and vessels by area roadways (by documenting traffic capacities) and by area waterways.

7) The marina facilities has no adverse impact on archaeological or historical properties as defined by the Florida Department of State.

Docking facilities shall only be approved in locations having adequate water depth to accommodate the proposed boat use. Greater depths shall be required for those facilities designed for or capable of accommodating boats having greater than a three foot draft. These depth requirements shall also apply to the area between the proposed facility and any natural or other navigation channel, inlet or deep water. Ingress and egress shall be delineated by appropriate markers indicating speed limits and any other applicable regulations. Where necessary, marking of navigational channels may also be required.

Docking facilities shall only be approved which require minimal or no dredging or filling to provide access by canal, channel, or road. This restriction shall also apply to widening or deepening any existing canal or channel; but not to regular maintenance dredging and filling to meet depth standards of existing canals or channels.

Applicants shall ensure that appropriate erosion control protection as determined by DER and DNR, will be in place before, during and after construction.

Applicants shall make an effort to retain and/or restore natural submerged and emergent vegetation. Applicants shall provide ways to improve, mitigate, or restore unacceptable environmental impacts caused by the proposed facility. This may include shallowing dredged areas, restoring wetlands or submerged vegetation on-site or re-establishment of a comparable habitat at an alternative location. Applicants shall maintain water quality standards as provided by Chapter 403, Florida Statutes.

Section 15 - Land Use Certificate Fee

The Board of County Commissioners may establish by resolution, a fee schedule for activities required by this Ordinance. The fee schedule may be amended from time to time by resolution of the Board of County Commissioners.

project site determined to be wetlands and shall submit to the Zoning Official for [redacted] tarized covenant providing that [redacted] parcel(s) or any portion of said parcel determined to be wetlands [redacted] take place. The parcel(s) or portion of a parcel which is preserved shall be designated "open space" on the plat/site plan and on the zoning map. The covenant shall run with the land and shall bind all successors in interest in perpetuity. The developer may transfer the residential density permitted within the district from the acreage determined to be wetlands to the portion of the parcel approved for development, thus increasing the density in the approved developable acreage. Residential density may be transferred from that portion of the project site that is determined to be wetlands as follows:

District	Maximum Density Transfer Permitted
R-1	2 per acre
R-2	3 per acre
R-3	4 per acre
R-4	5 per acre
R-5	6 per acre
R-6	7 per acre
C-1	8 per acre
C-2	8 per acre

Minimum Wetland Criteria for Field Verification.

All field verification surveys conducted by the Planning & Development Department will utilize the Federal Manual for Identifying and Delineating Jurisdictional Wetlands, January 1989 edition as published by the Fish and Wildlife Service, Environmental Protection Agency, Department of Army Corps of Engineers and Soil Conservation Service and any additional criteria as set forth in Department of Environmental Regulation, Florida Administrative Code 17.3.022, and subsequent amendments thereto.

Procedure.

The proposed project shall be reviewed by the Planning & Development Department within fifteen working days of submission of plan. Each application shall be accompanied by a plot plan drawn to scale showing the actual dimensions of the parcel to be built upon, the size, shape, height and location of the building to be erected, dimensions and locations of existing buildings, and the width of front, side and rear yards.

All projects which do not receive staff approval, or exempt out, or can take advantage of the Administrative Waiver provision, must complete the Planned Unit Development/Special Development District process.

ARTICLE VIII

Zoning Board of Adjustment

Section 1 - Establishment and Procedure

The Escambia County Zoning Board of Adjustment shall conduct any required public hearings to grant or deny applications for variances and special. Said Board shall conduct any public hearings concerning appeals made by those persons aggrieved by interpretations or administration of these regulations. Any decision made by the Board of Adjustment shall be final unless it is appealed to the Board of County Commissioners.

Section 2 - Powers and Duties

The Zoning Board of Adjustment shall have the following jurisdiction and authority.

5) The Zoning Board of Adjustment may impose such conditions on the granting of the Special Exception as may be necessary to prevent injurious effects on other property in the District.

6) Notification: Within 15 days of the date of public hearing the Zoning Board of Adjustment shall send to the person or entity requesting the Special Exception a notification of the action taken and the finding of fact upon which such action was taken.

Special Exceptions Waiver

The Board of County Commissioners may authorize upon appeal in specific cases such variance from the terms of Special Exception provisions of this Ordinance as will not be contrary to the public interest.

Waivers to the Special Exception Provisions shall be granted as follows:

1) The Enforcing Officer is hereby authorized to grant waivers in medical emergencies for placement of mobile homes as guest residences on behalf of the Board of County Commissioners providing applicant completes the following requirements:

a) The applicant must submit to the Enforcing Officer

1. a completed Request for Special Exception;

2. a letter from a physician or director of the appropriate hospital or hospice stating that a medical emergency exists with a member of the applicant's immediate family (as defined in this Ordinance) and the nature of that emergency;

3. a fee of $50.00;

4. a petition signed by at least 80% of property owners located within 500' of the subject property indicating that they have no objection to the placement of the mobile home as a guest residence on the applicant's property;

5. an acknowledgement signed by the applicant indicating that when the medical emergency no longer exists, in order to maintain the mobile home as a guest residence, the normal procedure for approval of a Special Exception will have to be followed.

2) The applicant must meet the minimum lot size requirement for placement of a guest residence as follows:

District	Minimum Lot Size
R-1	3/4 of an acre
R-2	3/4 of an acre
R-3 Through C-2	None

3) A finding of no significant negative impact resulting from the analysis performed by staff of the Planning and Development Department pursuant to ordinance requirements. Negative impact shall be defined as not being able to meet the requirements for consideration of a Special Exception as set forth in this Ordinance.

Variances

The Zoning Board of Adjustment may impose such conditions and restrictions upon the premises benefited by a variance (A modification

ARTICLE IX

ENFORCEMENT AND PENALTY

Section 1 - Enforcement

The County Administrator or his duly authorized representative is hereby designated the Enforcing Officer and is authorized to enforce these Regulations.

Section 2 - Misdemeanor

Violations of county ordinances shall be prosecuted in the same manner as misdemeanors are prosecuted. Such violations shall be prosecuted in the name of the state in court having jurisdiction of misdemeanors by the prosecuting attorney thereof and upon conviction shall be punished by a fine not to exceed $500 or by imprisonment in the county jail not to exceed 60 days or by both such fine and imprisonment.

Section 3 - Injunctive Relief

Upon approval of the Board of County Commissioners, the Enforcing Officer, in the name of Escambia County, may institute a civil action in a Court of competent jurisdiction to seek injunctive relief to enforce compliance with these Regulations. The bringing of an action requesting injunctive relief shall not limit or prohibit the issuance of an injunction for any other violation of these Regulations. All of the judicial and administrative remedies that are provided within these Regulations shall be independent and cumulative.

Section 4 - Daily Penalties

For the purpose of these Regulations, a separate offense shall be deemed committed for each day a violation of these Regulations exists, said time commencing at the time of notifying the offender of the violation.

ARTICLE X

MANDATORY REVIEW

At least once every five years commencing from the date of adoption of these Regulations, the Board of Adjustment, assisted by the Enforcing Officer, shall review these Regulations, determine such changes as necessary, if any, and recommend any required amendments to the Board of County Commissioners.

ARTICLE XI

AUTHORITY OF THE BOARD OF COUNTY COMMISSIONERS TO AMEND, SUPPLEMENT, CHANGE, MODIFY OR REPEAL

The Board of County Commissioners may from time to time amend, supplement, change, modify or repeal the regulations, restrictions or District boundaries set out in these Regulations.

1) Any person requesting an amendment, supplement, change or repeal of any regulation, restrictions or District boundary in these Regulations shall make an application for such change with the Enforcing Officer and the Board of Adjustment on forms provided by the Enforcing Officer.
Planning Board

2) The Planning Board shall review each application and make their recommendation to the Board of County Commissioners not later than 45 days after submission of the Application to the Board of Adjustment. On all requests, the Planning Board shall either recommend to the Board of County Commissioners that a public hearing be held; and the request granted or denied at the conclusion of the hearing.

3) A Public Hearing shall be held by the Planning Board for a zoning change of any specifically designated property (rezoning). On all requests, the Planning Board shall either recommend to the Board of County Commissioners that the request be granted or denied.

The Planning Board shall consider the following, as are relevant, in making a recommendation on an application for a change to district boundaries or rezoning:

a) The zoning history of the subject parcel;

b) Conformity to the Comprehensive Plan;

c) Uses permitted in the requested zoning district;

d) Impact on the surrounding transportation network (consider traffic counts, design capacity and traffic flow generated by change);

e) Availability and capacity of public services (gas, water, sewer, other);

f) Nature of surrounding land uses (compatibility with adjacent districts and uses);

g) Environmental impact of the use;

h) The creation of an isolated district unrelated to adjacent districts (spot zoning);

i) Applicable development standards promulgated by the Board of County Commissioners.

4) The applicant shall deposit with the Board of County Commissioners an amount to be determined by the Board of County Commissioners from time to time, to cover cost of hearing and distribution of notice. At least 10 days prior to the public hearing a notice of the time and place of the hearing shall be mailed to all owners of property lying within 500 feet. All owners of property under consideration for change will be notified by regular mail. The parcel of land affected by the proposed changes will be posted with a notice advertising the public hearing at least 10 days before the hearing date. Publication in a newspaper of general circulation in Escambia County at least 10 days prior to the amendment, supplement, change, modification or repeal of these regulation shall be proper public notice.

ARTICLE XII

SEVERABILITY

If any section, subsection, paragraph, sentence, clause, phrase or portion of these Regulations is for any reason found void, invalid, unlawful, or unconstitutional by any Court of competent, jurisdiction, such portion shall be deemed to be a separate, distinct, independent, and severable provision and such holding shall not affect the validity of the remaining portions of these Regulations.

ARTICLE XIII

HIGHER STANDARDS

Where any section, subsection or phrase of these Regulations may be deemed to be in conflict with any section, subsection, sentence or phrase of any other regulation or ordinance of Escambia County, Florida, the regulation or ordinance requiring the higher standard shall prevail except as otherwise provided herein.

TABLE OF CONTENTS

SUBJECT		PAGE
Preamble		1
Article I	Short Title	1
Article II	Enactment and Authority	1
Article III	Jurisdiction	2
Article IV	Purpose and Intent	2
Article V	Definition of Terms	3
Article VI	District, Boundaries, Land Use Map Lots of Record	15
Section 1	District Nomenclature	15
Section 2	R-1 Single-Family District, Low Density (0-4 DU's/acre)	17
Section 3	R-2 Single Family District, Low Medium Density (0-7 DU's/acre)	18
Section 4	R-3 One and Two-Family District, Medium Density (0-10 DU's/acre)	19
Section 5	R-4 Multiple-Family District, Medium High Density (0-18 DU's/acre)	21
Section 6	R-5 Urban Residential/Limited Office District, High Density (0-20 DU's/acre)	23
Section 7	R-6 Residential Neighborhood Commercial District, High Density (0-25 DU's/acre)	24
Section 8	C-1 Retail Commercial District	26
Section 9	C-2 General Commercial District	28
Section 10	ID-1 Light Industrial District	30
Section 11	ID-2 General Industrial District	32
Section 12	S-1 Outdoor Recreational District	33
Section 13	R-R Rural Residential District	33
Section 14	AG Agricultural District	34
Section 15	SDD Special Development District	36
Section 16	Airport Land Use	45
Part I	Findings	45
Part II	Applicability	45
Part III	Definitions	46
Part IV	Height Limitations	49
Part V	Airport Environs, Uses and Site and Building Requirements	55
Part VI	Uses Interfering with Aircraft	69
Part VII	Nonconforming Uses	70
Part VIII	Platted Property	71
Part IX	Land Use Certificate	71
Part X	Special Approval	73
Part XI	Zoning Board of Adjustment	73
Part XII	Remedies	76
Article VII	General Regulations	76

Document Separator

ORDINANCE NO. 92-38

AN ORDINANCE RELATING TO ESCAMBIA COUNTY, FLORIDA, AMENDING ORDINANCE NUMBER 89-27, URBAN AREA LAND USE REGULATIONS, ESCAMBIA COUNTY; AMENDING ARTICLE VI, DISTRICTS, BOUNDARIES, LAND USE MAP, LOTS OF RECORD; AMENDING ORDINANCE NUMBER 86-7, LAND USE REGULATIONS, UNIVERSITY OF WEST FLORIDA VICINITY; AMENDING ARTICLE VI, DISTRICTS, BOUNDARIES, LAND USE MAP, LOTS OF RECORD; AMENDING ORDINANCE NUMBER 89-6, ZONING REGULATIONS OF PERDIDO KEY; AMENDING ARTICLE VI, DISTRICTS, BOUNDARIES, ZONING MAP; PROVIDING FOR AN EFFECTIVE DATE.

BE IT ORDAINED BY THE BOARD OF COUNTY COMMISSIONERS OF ESCAMBIA COUNTY, FLORIDA:

SECTION 1. ARTICLE VI, Districts, Boundaries, Land Use Map, Lots of Record, Section 2, R-1 Single Family District, of Escambia County Ordinance No. 89-27, Urban Area Land Use Regulations, is amended to read as follows:

A. Uses Permitted

5) The keeping of miniature Vietnamese Potbelly Pigs, not to exceed 100 pounds and not to exceed one (1) pig per household, as a household pet in residential areas.

SECTION 2. ARTICLE VI, Districts, Boundaries, Land Use Map, Lots of Record, Section 2, R-1 Single Family District, of Escambia County Ordinance No. 86-7, Land Use Regulations, University of West Florida Vicinity, is amended to read as follows:

A. Uses Permitted

10) The keeping of miniature Vietnamese Potbelly Pigs, not to exceed 100 pounds and not to exceed one (1) pig per household, as a household pet in residential areas.

SECTION 3. ARTICLE VI, Districts, Boundaries, Zoning Map, Section 1.1, R-1 Low Density, of Escambia County Ordinance No. 89-6, Zoning Regulations of Perdido Key, is amended to read as follows:

A. Uses Permitted

8) The keeping of miniature Vietnamese Potbelly Pigs, not to exceed 100 pounds and not to exceed one (1) pig per household, as a household pet in residential areas.

SEP 30 ... STATE
SECRETARY OF ST.
OCT 1 11 24 AM
FILED

Document Separator

ORDINANCE NO. 94—2
ESCAMBIA COUNTY, FLORIDA

AN ORDINANCE OF ESCAMBIA COUNTY, FLORIDA AMENDING THE ZONING AND LAND USE REGULATIONS FOR THE INDUSTRIAL DISTRICT (ID-1) AND THE GENERAL INDUSTRIAL DISTRICT (ID-2); PROVIDING FOR AUTHORITY; PROVIDING FOR PURPOSE; PROVIDING FOR AMENDMENTS TO THE ID-1 REGULATIONS; PROVIDING FOR AMENDMENTS TO THE ID-2 REGULATIONS; PROVIDING FOR SEVERABILITY; AND PROVIDING FOR AN EFFECTIVE DATE.

WHEREAS; Ordinance #89-27, as amended, establishes the land use regulations, zoning districts, district regulations and permitted and restricted uses by districts, among other things; and

WHEREAS; The regulations governing the use of lands in certain districts require refinement and modification in order to accomplish the intents and purposes of Ordinance #89-27, as amended, and the adopted Comprehensive Plan (Ordinance #93-20); and

WHEREAS; The Escambia County Planning Board (LPA) has reviewed the district regulations and considered the adequacy of said regulations as such relates to various provisions of the Comprehensive Plan; and

WHEREAS; The LPA determined that modifications to Sections 10 & 11 (ID-1 & ID-2) of Article VI (District Regulations) of Ordinance #89-27, as amended, is proper and appropriate and consistent with the requirements of the Comprehensive Plan; and

WHEREAS; The Board of County Commissioners concurs with the determination of the LPA and further finds that amending Ordinance #89-27, as amended, is necessary to the well being of the County and its citizens; NOW

BE IT ORDAINED BY THE BOARD OF COUNTY COMMISSIONERS OF ESCAMBIA COUNTY, FLORIDA:

ARTICLE I - AUTHORITY: The Authority for enactment of this Ordinance is § 163.3187 F.S., Florida Statute Chapters 125 and 177 and Ordinance #93-20 (the Comprehensive Plan).

ARTICLE II - PURPOSE: The purpose of this Ordinance is to modify the ID-1 and ID-2 Zoning District Regulations. Among other things, the amendments to the Zoning Districts will provide a reasonable method(s) for assuring compatibility of adjacent land uses and minimizing or eliminating the establishment of new incompatible or conflicting adjacent (or nearby) land uses. Compatibility of adjacent or nearby uses must be assured pursuant to several provisions of the Comprehensive Plan including Objective 7.A.3, Policies 7.A.3.1, 7.A.3.2, 7.A.3.6, 7.A.3.7, and 7.A.4.7, among others.

ARTICLE III - AMENDMENTS TO THE ID-1 REGULATIONS: Article VI, Section 10 of Ordinance #89-27 is hereby amended as follows:

ID-1 Light Industrial District (Cumulative) (No Residential Uses Allowed)

Intent and Purposes:

This district is intended primarily for research-oriented activities, light manufacturing and processing not involving the use of materials, processes or machinery likely to cause undesirable effects upon nearby property.

A. Uses Permitted

1) Any non-residential use permitted in the preceding district.

2) Research and development operations, towers, light manufacturing, processing or fabricating uses, enclosed storage structures and accessory structures and activities provided that the Board of Adjustment finds that the following standards are met.

a) All work and/or operations must be conducted within buildings except temporary outside storage (including assembly or processing staging areas) may be allowed if adequately buffered and screened from adjacent uses. All waste material must be stored while on the property in a screened enclosure.

b) Any process that creates smoke shall meet all standards as required by the Florida Department of Environmental Protection and the Environmental Protection Agency.

c) No process shall emit an offensive odor detectable beyond the lot or parcel. Where odors are produced and provisions for eradication within a building are provided, the burden of successful elimination of the odors shall rest on the occupant of the premises.

d) Operations creating excessive noise, vibration, dust, smoke or fumes which are a nuisance to persons off of the lot or parcel are not permitted.

e) Operations creating glare shall be shielded so that the glare cannot be seen from off the lot or parcel.

f) Disposal of industrial or other wastes, gaseous, liquid or solid, must be approved by the Escambia County Solid Waste Department and the Florida Department of Environmental Protection.

3) Commercial businesses with outside storage when such storage is adequately screened and/or buffered.

4) Other uses similar to those permitted herein. Determination on other permitted uses shall be made by the Planning Board and shall be recommended to the Board of County Commissioners for Board action to allow or deny the use.

B) Special Exceptions

1) Any special exception allowed in preceding districts.
2) Borrow pits, Junk Yards and/or salvage yards.

C) Site and Building Requirements

1) Building Height Limit. No building shall exceed 2 1/2 stories or 35 feet in height except as otherwise provided in Article VII, Section 9 herein.

2) Minimum Lot Size. There shall be no minimum lot size.

3) Lot Coverage. The maximum combined area occupied by all principal and accessory buildings shall not exceed 50 percent of the total area, except as provided for in the Escambia County Stormwater Management and Conservation Ordinance No. 90-21, as amended.

4) Lot Width. There shall be no minimum lot width.

5) Yard Requirements. There shall be a front yard having a depth of not less than 15 feet. There shall be a rear yard having a depth of not less than 20 feet. There shall be side yards of not less than 10 feet. On property abutting an estuarine, riverine or creek system, the setback shall be in accordance with the Marine/Estuarine/Riverine Setback (MERS) Provision of these Regulations (Article VII, Section 10) or 20 feet, whichever is greater. The Board of Adjustment may waive the yard requirements, in response to an application therefor, if a finding of fact is made that such waiver would not adversely impact public safety, sensitive environmental resources or compatibility with adjacent uses. Also, such waiver may be granted only if the development plans for the subject property reflect conformance with a floor area ratio which does not exceed 1.1 and a maximum impervious cover limit of 85%.

6) Screening Adjacent to Residential Areas. Where a lot line within an ID-1 District abuts the side or rear lot line of any residential lot, screening/buffering is required. Such screening/buffering may be in the form of unimproved property, walls, fences or landscaping and shall be at least 50% opaque when viewed from any point along said residential lot line. When landscaping is used for screening, the opacity requirements shall be attained within 18 months of the issuance of the certificate of occupancy. The primary purpose of the screening/buffering is to ensure compatibility of adjacent uses as required by Comprehensive Plan Policy 7.A.3.7.

7) Access. Direct access must be provided from a collector or arterial roadway and such access may be provided by curb cuts on the collector or arterial roadway or a private or public road linking the use with a collector or arterial roadway provided that such private or public road does not traverse a predominately residential neighborhood or subdivision between the use and the collector or arterial roadway. No permit shall be issued for any proposed use which requires access through a residential neighborhood or subdivision, unless such access is directly on a collector or arterial roadway.

8) Existing Uses. Any previously conforming use (including, but not limited to, Asphalt and Concrete plants) lawfully and legally existing in this District on December 6, 1993 which conforms to the access requirements and provisions in paragraph 7 above may be considered a "Conforming Use" for the purposes of this ordinance. To qualify as a conforming use under this provision, the owner of property impacted by this ordinance shall request a "Certificate of Conformance" from the Department of Growth Management Services within one hundred eighty (180) days of receipt of a Notice from the Department that such Certificate is available and that such may be appropriate for the subject property and use. Failure to request the Certificate within the prescribed period may result in the use being considered and/or classified as a "Non-Conforming Use."

D) Landscaping

See Article VII, Section 13

ARTICLE IV - AMENDMENTS TO THE ID-2 REGULATIONS. Article VI, Section 11 of Ordinance #89-27 is hereby amended as follows:

ID-2 General Industrial District (Non-Cumulative)

A. Uses Permitted

1) Uses not permitted in ID-1 Light Industrial District. No Land Use Certificate shall be issued until the use and the location have been approved by the Board of County Commissioners subject to the following procedure:

   a) A request shall be made with the Board of Adjustment to permit a specific use.

   b) The Board of Adjustment shall review the request and make a recommendation to the Board of County Commissioners.

   c) Within 45 days the Board of County Commissioners shall hold a public hearing as provided for in Article VIII.

   d) The Board of County Commissioners shall approve or deny the request at the conclusion of the public hearing, which may be continued at the discretion of the Board.

2) Except as provided in Article VI, Section 10C(8) above, the following uses are permitted **only** in the ID-2 General Industrial District and subject to the approval process described in Paragraph 1 above:

   a) Asphalt Plants.

   b) Concrete Plants.

   c) Iron Works.

   d) Landfills (except those landfills or fill activities associated with the reclamation of borrow pits or sites, which, if permitted by all appropriate regulatory agencies, may be placed or conducted at the reclamation site, regardless of the zoning district wherein the site is located).

   e) Mining.

   f) Paper Mills.

   g) Refineries.

   h) Rendering plants and slaughter houses.

   i) Steel Mills.

   j) Trash and/or solid waste transfer stations.

   k) Other uses similar to those listed herein.

Recommendations on other permitted uses shall be made by the Planning Board and based on an application for such other use. Final determination shall be made by the Board of County Commissioners upon receipt of the Planning Board's recommendation.

B. Uses Prohibited

1) Single, two and multi-family dwelling units.

C. Site and Building Requirements

1) Building Height Requirement. No building shall exceed three stories or 40 feet in height except as otherwise provided in Article VII, Section 9.

2) Compatibility - buffering shall be provided consistent with the provisions of the Escambia County Comprehensive Plan and the proposed use must be consistent with the compatibility requirements of the Plan so that the proposed use and its impacts are compatible with existing adjacent or nearby uses (see Policies 7.A.3.7, 7.A.4.7(h) & (k), and 7.A.4.13, among others.

3) Lot Coverage. The maximum combined area occupied by all principal and accessory buildings shall not exceed 50 percent of the total lot area except as provided for in the Escambia County Stormwater Management and Conservation Ordinance, No. 90-21, as amended, or any duly authorized successor ordinance.

4) Lot Width. The minimum lot width at the street right-of-way shall be 100 feet.

5) Yard Requirements. There shall be a front yard having a depth of not less than 25 feet. There shall be a rear yard having a depth of not less than 25 feet. There shall be side yards of not less than 15 feet. The Board of Adjustment may waive the yard requirements, in response to an application therefor, if a finding of fact is made that such waiver would not adversely impact public safety, sensitive environmental resources or compatibility with adjacent uses. Also, such waiver may be granted only if the development plans for the subject property reflect conformance with a floor area ratio which does not exceed 1.1 and a maximum impervious cover limit of 85%.

D. Landscaping

See Article VII, Section 13.

E. Screening Adjacent to Residential Areas.

Where a lot line within an ID-2 District abuts the side or rear lot line of any residential lot, screening/buffering is required. Such screening/buffering may be in the form of unimproved property, walls, fences or landscaping and shall be at least 50% opaque when viewed from any point along said residential lot line. When landscaping is used for screening, the opacity requirements shall be attained within 18 months of the issuance of the certificate of occupancy. The primary purpose of the screening/buffering is to ensure compatibility of adjacent uses as required by Comprehensive Plan Policy 7.A.3.7.

F. Access. Direct access must be provided from a collector or arterial roadway and such access may be provided by curb cuts on the collector or arterial roadway or a private or public road linking the use with a collector or arterial roadway provided that such private or public road does not traverse a predominately residential neighborhood or subdivision between the use and the collector or arterial roadway. No permit shall be issued for any proposed use which requires access through a residential neighborhood or subdivision, unless such access is directly on a collector or arterial roadway.

ARTICLE V - SEVERABILITY: If any provision of this Ordinance is, for any reason, held to be invalid or unconstitutional by any court of competent jurisdiction, such provision and such holdings shall not affect the validity of any other provision and to that end the provisions of this Ordinance are declared to be severable.

ARTICLE VI - EFFECTIVE DATE: The effective date of this Ordinance shall be the date of receipt by Escambia County of notice from the Florida Department of State that this Ordinance has been received and duly filed.

PASSED AND ADOPTED by the Board of County Commissioners of Escambia County, Florida this 27th day of January, 1994.

BOARD OF COUNTY COMMISSIONERS
OF ESCAMBIA COUNTY, FLORIDA

By: _____
D.M. "MIKE" WHITEHEAD, CHAIRMAN

ATTEST: JOE A. FLOWERS,
COMPTROLLER

By: Joe A. Flowers
CLERK

(SEAL)

STATE OF FLORIDA
COUNTY OF ESCAMBIA

I, JOE A. FLOWERS, COMPTROLLER, and ex-officio Clerk to the Board of County Commissioners in and for the County and State aforesaid, do hereby certify that the above and foregoing is a true and correct copy of an Ordinance as the same was duly adopted and passed at a Meeting of the Board on the 27th day of January, 1994, and as the same appears on record in my office.

IN WITNESS WHEREOF, I hereunto set my hand and official seal this 28th day of January, 1994.

JOE A. FLOWERS, COMPTROLLER
AND EX-OFFICIO CLERK TO THE
BOARD OF COUNTY COMMISSIONERS
OF ESCAMBIA COUNTY, FLORIDA

By: Joe A. Flowers
CLERK

(SEAL)

STATE OF FLORIDA

COUNTY OF ESCAMBIA

I, JOE A. FLOWERS, COMPTROLLER, and ex-officio Clerk to the Board of County Commissioners in and for the County and State aforesaid, do hereby certify that the above and foregoing is a true and correct copy of an Ordinance as the same was duly adopted and passed at a Meeting of the Board held on the 27th day of January, 1994, and as the same appears on record in my office.

IN WITNESS WHEREOF, I hereunto set my hand and official seal this 8th day of February, 1994.

JOE A. FLOWERS, COMPTROLLER
AND EX-OFFICIO CLERK TO THE
BOARD OF COUNTY COMMISSIONERS
OF ESCAMBIA COUNTY, FLORIDA

By: Marilyn Hongney
Deputy Clerk

(S E A L)

ORDINANCE NO. 92-2

AN ORDINANCE RELATING TO ESCAMBIA COUNTY, FLORIDA, AMENDING ORDINANCE NUMBER 89-27, URBAN AREA LAND USE REGULATIONS, ESCAMBIA COUNTY; AMENDING ARTICLE VIII, ZONING BOARD OF ADJUSTMENT; AMENDING ORDINANCE NUMBER 86-7, LAND USE REGULATIONS, UNIVERSITY OF WEST FLORIDA VICINITY; AMENDING ARTICLE VIII, ZONING BOARD OF ADJUSTMENT; AMENDING ORDINANCE NUMBER 89-6, ZONING REGULATIONS OF PERDIDO KEY; AMENDING ARTICLE VIII, ZONING BOARD OF ADJUSTMENT; PROVIDING FOR THE REPEAL OF ORDINANCE NUMBER 91-2; PROVIDING FOR AN EFFECTIVE DATE.

BE IT ORDAINED BY THE BOARD OF COUNTY COMMISSIONERS OF ESCAMBIA COUNTY, FLORIDA:

SECTION 1. ARTICLE VIII, Zoning Board of Adjustment, of Escambia County Ordinance No. 89-27, Urban Area Land Use Regulations, is amended to read as follows:

ARTICLE VIII

Zoning Board of Adjustment

Section 1 - Establishment and Procedure

The Escambia County Zoning Board of Adjustment shall conduct any required public hearings to grant or deny applications for special exceptions, variances, and appeals made by those persons aggrieved by interpretations or administration of these regulations. Any decision made by the Board of Adjustment shall be final unless it is appealed to and overturned by the Board of County Commissioners.

Section 2 - Powers and Duties

The Zoning Board of Adjustment shall have the following jurisdiction and authority.

Special Exceptions

The Zoning Board of Adjustment is authorized to hear and to approve or disapprove only such Special Exceptions as specifically authorized by these Regulations. The Zoning Board of Adjustment shall decide: (a) such questions as are involved in determining whether Special Exceptions should be granted; (b) to grant Special Exceptions with such conditions and safeguards as are appropriate under these Regulations; or (c) to deny Special Exceptions when not in harmony with the purpose and intent of these Regulations. A Special Exception shall not be approved by the Zoning Board of Adjustment unless said Board finds:

1) That a written application for a Special Exception has been submitted indicating the section of this Ordinance under which the Special Exception is sought and stating the grounds on which it is requested.

2) A public hearing shall be held by the Zoning Board of Adjustment. The owner of the property for which Special Exception is sought or agent of the owner, and the owners of property within 500 feet of the affected property shall be notified by regular mail, at least 10 days prior to the public hearing. Notice of such hearing shall be posted in a conspicuous spot on the property for which Special Exception is sought, at least 10 days prior to the public hearing. The applicant shall deposit with the Board of County Commissioners an amount to be established by resolution of the Board of County Commissioners to cover the cost of hearing, publication and distribution of notice.

(a) The applicant must submit to the Enforcing Officer

1. a completed Request for Special Exception;

2. a letter from a physician or director of the appropriate hospital or hospice stating that a medical emergency exists with a member of the applicant's immediate family (as defined in this Ordinance) and the nature of that emergency;

3. a fee to be established by resolution of the Board of County Commissioners;

4. a petition signed by at least 80% of property owners located within 500' of the subject property indicating that they have no objection to the placement of the mobile home as a guest residence on the applicant's property;

5. an acknowledgment signed by the applicant indicating that when the medical emergency no longer exists, in order to maintain the mobile home as a guest residence, the normal procedure for approval of a Special Exception will have to be followed.

2) The applicant must meet the minimum lot size requirement for placement of a guest residence as follows:

District	Minimum Lot Size
R-1	3/4 of an acre
R-2	3/4 of an acre
R-3 Through C-2	None

3) A finding of no significant negative impact resulting from the analysis performed by staff of the Planning and Zoning Department pursuant to ordinance requirements. Negative impact shall be defined as not being able to meet the requirements for consideration of a Special Exception as set forth in this Ordinance.

Variances

The Zoning Board of Adjustment may impose such conditions and restrictions upon the premises benefited by a variance (A modification of the Land Use Regulations when such modification will not be contrary to the public interest and when, owing to conditions peculiar to the property and not the result of the actions of the applicant, a literal enforcement of the ordinance would result in unnecessary and undue hardship. A variance may be authorized only for height, area, bulk, and size of structure or yard size, and open spaces. Establishment or expansion of a use otherwise prohibited shall not be allowed by variance, nor shall a variance be granted because of the presence of nonconformities in the district or classification or in adjoining districts or classifications) as may be necessary to prevent injurious effects upon other property in the neighborhood and to better carry out the general intent of this Ordinance. A variance shall not be approved by the Zoning Board of Adjustment unless said Board finds:

1) That a written application for a variance has been submitted stating the grounds on which it is requested.

2) That before any variance shall be issued the Zoning Board of Adjustment shall make written findings certifying:

with a statement of the grounds on which the appeal is based.

2) That before any administrative decision, interpretation, or administration is reversed, altered or modified, the Zoning Board of Adjustment shall make written findings that the person filing said appeal has shown how the decision of the administrative official was not supported by competent substantial evidence.

Notification: Within 15 days after the date of the decision, the Zoning Board of Adjustment shall notify by certified mail the person or entity requesting the variance of the finding(s) of fact and the decision of the Zoning Board of Adjustment.

Appeals

Appeals of decisions of the Zoning Board of Adjustment may be taken to the Board of County Commissioners by the petitioner or any owner of property located within 500 feet aggrieved by such decision. Such appeals shall be submitted within ten days of the decision over which such appeal is made by filing an Application for Appeal (Notice of Appeal) specifying the grounds for appeal. The Zoning Official shall forward copies of all papers constituting the record upon which the original action was taken to the County Administrator for presentation to the Board of County Commissioners.

The Board of County Commissioners shall fix a time for hearing the appeal and give due notice in its regular meeting schedule (published in a newspaper in general circulation in Escambia County) of the intent to hear and make a decision on the appeal. Any party may appear at the hearing in person or by agent or attorney. The applicant shall deposit with the Board of County Commissioners an amount to be determined by the Board of County Commissioners from time to time, to cover cost of notice publication.

SECTION 2. ARTICLE VIII, Zoning Board of Adjustment, of Escambia County Ordinance No. 86-7, Land Use Regulations, University of West Florida Vicinity, is amended to read as follows:

ARTICLE VIII

Zoning Board of Adjustment

Section 1 - Establishment and Procedure

The Escambia County Zoning Board of Adjustment shall conduct any required public hearings to grant or deny applications for special exceptions, variances, and appeals made by those persons aggrieved by interpretations or administration of these regulations. Any decision made by the Board of Adjustment shall be final unless it is appealed to and overturned by the Board of County Commissioners.

Section 2 - Powers and Duties

The Zoning Board of Adjustment shall have the following jurisdiction and authority.

Special Exceptions

The Zoning Board of Adjustment is authorized to hear and to approve or disapprove only such Special Exceptions as specifically authorized by these Regulations. The Zoning Board of Adjustment shall decide: (a) such questions as are involved in determining whether Special Exceptions should be granted; (b) to grant Special Exceptions with such conditions and safeguards as are appropriate under these Regulations; or (c) to deny Special Exceptions when not in harmony with the purpose and intent of these Regulations. A Special Exception shall not be

6) Notification: Within 15 days after the date of the public hearing, the Zoning Board of Adjustment shall notify by certified mail the person or entity requesting the Special Exception of the finding(s) of fact and the decision of the Zoning Board of Adjustment.

Variances

The Zoning Board of Adjustment may impose such conditions and restrictions upon the premises benefited by a variance (A modification of the Land Use Regulations when such modification will not be contrary to the public interest and when, owing to conditions peculiar to the property and not the result of the actions of the applicant, a literal enforcement of the ordinance would result in unnecessary and undue hardship. A variance may be authorized only for height, area, bulk, and size of structure or yard size, and open spaces. Establishment or expansion of a use otherwise prohibited shall not be allowed by variance, nor shall a variance be granted because of the presence of nonconformities in the district or classification or in adjoining districts or classifications) as may be necessary to prevent injurious effects upon other property in the neighborhood and to better carry out the general intent of this Ordinance. A variance shall not be approved by the Zoning Board of Adjustment unless said Board finds:

1) That a written application for a variance has been submitted stating the grounds on which it is requested.

2) That before any variance shall be issued the Zoning Board of Adjustment shall make written findings certifying:

   (a) That there are exceptional circumstances or conditions applicable to the property that do not apply generally to other property in the same vicinity and District.

   (b) That such variance is necessary for the preservation and enjoyment of a substantial property right possessed by other property in the same vicinity and District, but which is denied to the property in the request.

   (c) That the granting of such variance will not be injurious to the property or improvements in such vicinity and District in which the property in question is located or otherwise detrimental to the public welfare.

The Zoning Board of Adjustment shall make findings that the requirements above have been met by the applicant for variance.

The Zoning Board of Adjustment shall further make a finding that the reasons set forth in the application justify the granting of a variance, and that the variance is the minimum variance that will make possible the use of the land, building, or structure.

Notification: Within 15 days after the date of the decision, the Zoning Board of Adjustment shall notify by certified mail the person or entity requesting the variance of the finding(s) of fact and the decision of the Zoning Board of Adjustment.

Administrative Review

The Director of Planning and Zoning may grant administrative approval for variances, not exceeding ten (10) percent, to the setback requirements of this Ordinance.

1) Applicantions for a variance request may be approved administratively by the Director of Planning and

SECTION 3. ARTICLE VIII, Zoning Board of Adjustment, of Escambia County Ordinance No. 89-6, Zoning Regulations of Perdido Key, is amended to read as follows:

ARTICLE VIII

Zoning Board of Adjustment

Section 1 - Establishment and Procedure

The Escambia County Zoning Board of Adjustment shall conduct any required public hearings to grant or deny applications for special exceptions, variances, and appeals made by those persons aggrieved by interpretations or administration of these regulations. Any decision made by the Board of Adjustment shall be final unless it is appealed to and overturned by the Board of County Commissioners.

Section 2 - Powers and Duties

The Zoning Board of Adjustment shall have the following jurisdiction and authority.

Special Exceptions

The Zoning Board of Adjustment is authorized to hear and to approve or disapprove only such Special Exceptions as specifically authorized by these Regulations. The Zoning Board of Adjustment shall decide: (a) such questions as are involved in determining whether Special Exceptions should be granted; (b) to grant Special Exceptions with such conditions and safeguards as are appropriate under these Regulations; or (c) to deny Special Exceptions when not in harmony with the purpose and intent of these Regulations. A Special Exception shall not be approved by the Zoning Board of Adjustment unless said Board finds:

1) That a written application for a Special Exception has been submitted indicating the section of this Ordinance under which the Special Exception is sought and stating the grounds on which it is requested.

2) A public hearing shall be held by the Zoning Board of Adjustment. The owner of the property for which Special Exception is sought or agent of the owner, and the owners of property within 500 feet of the affected property shall be notified by regular mail, at least 10 days prior to the public hearing. Notice of such hearing shall be posted in a conspicuous spot on the property for which Special Exception is sought, at least 10 days prior to the public hearing. The applicant shall deposit with the Board of County Commissioners an amount to be established by resolution of the Board of County Commissioners to cover the cost of hearing, publication and distribution of notice.

3) That a public hearing was held by the Zoning Board of Adjustment on the special exception request, prior to taking final action, where all interested parties were given opportunity to appear in person or be represented by agent or attorney.

4) Before any Special Exception shall be issued, the Zoning Board of Adjustment shall make written findings certifying compliance with the specific rules governing individual Special Exceptions, and that satisfactory provisions and arrangement have been made concerning the following, where applicable:

   (a) Ingress and egress to property and proposed structures thereon with particular reference to automotive and pedestrian safety and convenience.

(b) That such variance is necessary for the preservation and enjoyment of a substantial property right possessed by other property in the same vicinity and District, but which is denied to the property in the request.

(c) That the granting of such variance will not be injurious to the property or improvements in such vicinity and District in which the property in question is located or otherwise detrimental to the public welfare.

The Zoning Board of Adjustment shall make findings that the requirements above have been met by the applicant for variance.

The Zoning Board of Adjustment shall further make a finding that the reasons set forth in the application justify the granting of a variance, and that the variance is the minimum variance that will make possible the use of the land, building, or structure.

Notification: Within 15 days after the date of the decision, the Zoning Board of Adjustment shall notify by certified mail the person or entity requesting the variance of the finding(s) of fact and the decision of the Zoning Board of Adjustment.

Administrative Review

The Director of Planning and Zoning may grant administrative approval for variances, not exceeding ten (10) percent, to the setback requirements of this Ordinance.

1) Applicantions for a variance request may be approved administratively by the Director of Planning and Zoning provided the variance does not exceed ten (10) percent of the required setback.

2) The Director of Planning and Zoning shall determine that special conditions and circumstances exist that are peculiar to the land and that a variance is necessary to make use of the land.

3) The conditions that apply to the variance approval requirements of the Zoning Board of Adjustment as defined in this section shall apply to this Administrative Review authority.

The Director of Planning and Zoning may grant administrative approval for variances to setbacks of this Ordinance when the variance will result in the preservation of a "Protected Tree" as defined under Escambia County Ordinance Number 89-4, Escambia County Tree Preservation Ordinance, or duly adopted successor ordinance. The variance granted shall be the minimum required to preserve a protected tree.

Administrative Decisions

The Zoning Board of Adjustment is authorized to hear and to rule upon any appeal made by those persons aggrieved by an interpretation or administration of these regulations. An administrative decision, interpretation, or administration shall not be overturned by the Zoning Board of Adjustment unless said Board finds:

1) That a written application for the appeal has been submitted indicating the section of Escambia County Ordinance No. 89-6, as amended, Zoning Regulations of Perdido Key, under which said appeal applies together with a statement of the grounds on which the appeal is based.

2) That before any administrative decision, interpretation, or administration is reversed, altered

STATE OF FLORIDA

COUNTY OF ESCAMBIA

I, JOE A. FLOWERS, COMPTROLLER, and ex-officio Clerk to the Board of County Commissioners in and for the County and State aforesaid, do hereby certify that the above and foregoing is a true and correct copy of an Ordinance as the same was duly adopted and passed at a Regular Meeting of the Board on the 7th day of January, 1992, and as the same appears on record in my office.

IN WITNESS WHEREOF, I hereunto set my hand and official seal this 10th day of January, 1992.

JOE A. FLOWERS, COMPTROLLER
AND EX-OFFICIO CLERK TO THE
BOARD OF COUNTY COMMISSIONERS
OF ESCAMBIA COUNTY, FLORIDA

By Joe A. Flowers
Clerk

(S E A L)

STATE OF FLORIDA

COUNTY OF ESCAMBIA

I, JOE A. FLOWERS, COMPTROLLER, and ex-officio Clerk to the Board of County Commissioners in and for the County and State aforesaid, do hereby certify that the above and foregoing is a true and correct copy of an Ordinance as the same was duly adopted and passed at a Meeting of the Board on the 23rd day of May, 1991, and as the same appears on record in my office.

IN WITNESS WHEREOF, I hereunto set my hand and official seal this 24th day of May, 1991.

JOE A. FLOWERS, COMPTROLLER
AND EX-OFFICIO CLERK TO THE
BOARD OF COUNTY COMMISSIONERS
OF ESCAMBIA COUNTY, FLORIDA

By Joe A. Flowers
Clerk

(S E A L)

FILED
MAR 28 10 11 AM '91
SECRETARY OF STATE

ORDINANCE NO. 91-4

AN ORDINANCE RELATING TO ESCAMBIA COUNTY, FLORIDA, AMENDING ORDINANCE NUMBER 89-27, URBAN AREA LAND USE REGULATIONS, ESCAMBIA COUNTY: AMENDING ARTICLE XI; PROVIDING LIMITATION ON SUBSEQUENT APPLICATION; PROVIDING FOR EXEMPTION FROM THE ADMINISTRATIVE PROCEDURES ACT; PROVIDING FOR HIGHER STANDARDS; PROVIDING FOR SEVERABILITY; AND PROVIDING FOR AN EFFECTIVE DATE.

BE IT ORDAINED BY THE BOARD OF COUNTY COMMISSIONERS OF ESCAMBIA COUNTY, FLORIDA:

SECTION 1. ARTICLE XI, Authority of the Board of County Commissioners to amend, supplement, change, modify or repeal, Escambia County Ordinance 89-27 is amended to read as follows:

CLERK'S OFFICE
1991 MAR 28 A10:38

ARTICLE XI

AUTHORITY OF THE BOARD OF COUNTY COMMISSIONERS TO AMEND, SUPPLEMENT, CHANGE, MODIFY OR REPEAL

The Board of County Commissioners may from time to time amend, supplement, change, modify or repeal the regulations, restrictions, or District boundaries set forth in the Land Development Regulations of Escambia County.

1) Every such proposed amendment, supplement, change, modification, or repeal of any regulation, restriction, or District boundary in these Regulations shall be referred to the Planning Board who shall schedule and conduct public meetings and hearings to hear applications, study proposals, and make recommendations to the Board of Commissioners for final action.

2) Any person requesting an amendment, supplement, change, modification, or repeal of any regulation, restriction, or District boundary in these Regulations shall make an application for such change with the Enforcing Officer on forms provided by the Enforcing Officer. Completed applications will be forwarded to the Planning Board who shall schedule and conduct public meetings and hearings to hear applications and make recommendations to the Board of County Commissioners.

PLANNING BOARD REVIEW AND ACTION

Notice and Public Hearing

1) The Planning and Zoning Department shall notify the current property owners within a five hundred (500) feet radius of the property proposed to be rezoned, as well as the owner(s) of the property under consideration for change or agent for the owner(s) of the public hearing by regular mail, at least ten (10) days prior to the scheduled Planning Board public hearing. The notice shall state the date, time and place of the public hearing.

2) The Planning and Zoning Department shall place a sign on the property to be rezoned announcing the date, time and location of the Planning Board public hearing at least ten (10) days prior to the hearing.

3) The Planning and Zoning Department shall publish in a newspaper of general circulation in Escambia County, at least ten (10) days prior to the public hearing, a notice stating the date, time and place of the public hearing. The applicant shall deposit with the Board of County Commissioners an amount to be established by Resolution of the Board of County Commissioners to cover the cost of hearing, publication, and distribution of notice.

4) The Planning Board shall review each application at a public hearing and make its recommendation to the Board of County Commissioners not later than forty-five days after submission of

STATE OF FLORIDA

COUNTY OF ESCAMBIA

I, JOE A. FLOWERS, COMPTROLLER, and ex-officio Clerk to the Board of County Commissioners in and for the County and State aforesaid, do hereby certify that the above and foregoing is a true and correct copy of an Ordinance as the same was duly adopted and passed at a Meeting of the Board on the 19th day of December, 1991, and as the same appears on record in my office.

IN WITNESS WHEREOF, I hereunto set my hand and official seal this 23rd day of December, 1991.

JOE A. FLOWERS, COMPTROLLER
AND EX-OFFICIO CLERK TO THE
BOARD OF COUNTY COMMISSIONERS
OF ESCAMBIA COUNTY, FLORIDA

By Joe A. Flowers
Clerk

(S E A L)

ORDINANCE NO. 90-02

AN ORDINANCE AMENDING ESCAMBIA COUNTY ORDINANCE NUMBER 89-27, URBAN AREA LAND USE REGULATIONS, ESCAMBIA COUNTY; AMENDING ARTICLE VI, DISTRICT, BOUNDARIES, LAND USE MAP, AND LOTS OF RECORD, SECTION 8, "C-1" RETAIL COMMERCIAL DISTRICT REGULATIONS TO ALLOW AUTOMOBILE SALES AS A SPECIAL EXCEPTION; PROVIDING FOR CRITERIA; AND PROVIDING FOR AN EFFECTIVE DATE.

BE IT ORDAINED BY THE BOARD OF COUNTY COMMISSIONERS OF ESCAMBIA COUNTY, FLORIDA:

Section 1. Article VI, entitled " District, Boundaries, Land Use Map, Lots of Record", Section 8, entitled "C-1" Retail Commercial District, of Escambia County Ordinance Number 89-27 is hereby amended to add the following:

B. Special Exceptions

2) Automobiles Sales, subject to the following conditions:

a) That the lot or site not exceed one acre in size; and

b) That the property have at least 100' of frontage on a major or minor arterial roadway.

Section 2. Effective Date.

In accordance with Section 125.66 (2), Florida Statutes, a certified copy of this ordinance shall be filed with the Secretary of State by the Clerk to the Board of County Commissioners within ten (10) days after enactment, and this Ordinance shall take effect upon receipt of official acknowledgment that said Ordinance has been filed.

PASSED AND ADOPTED by the Board of County Commissioners of Escambia County, Florida this 4th day of January, 1990.

BOARD OF COUNTY COMMISSIONERS
OF ESCAMBIA COUNTY, FLORIDA

By Kenneth J. Kelson
Kenneth J. Kelson, Chairman

ATTEST: JOE A. FLOWERS,
COMPTROLLER

Joe A. Flowers
CLERK

(SEAL)

ORDINANCE NO. 90-01

AN ORDINANCE AMENDING ESCAMBIA COUNTY ORDINANCE NUMBER 89-27, URBAN AREA LAND USE REGULATIONS, ESCAMBIA COUNTY; AMENDING ARTICLE VI, DISTRICT, BOUNDARIES, LAND USE MAP, AND LOTS OF RECORD, SECTION 15, "SDD SPECIAL DEVELOPMENT DISTRICT (NON-CUMULATIVE) LOW DENSITY" REGULATIONS TO ALLOW AUTOMOBILE REPAIR AS A PERMITTED USE UNDER THE PUD/SDD PROVISION AS A SPECIAL EXCEPTION; AND PROVIDING FOR AN EFFECTIVE DATE.

BE IT ORDAINED BY THE BOARD OF COUNTY COMMISSIONERS OF ESCAMBIA COUNTY, FLORIDA:

Section 1. Article VI, entitled " District, Boundaries, Land Use Map, Lots of Record", Section 15, entitled "SDD Special Development District (Non-Cumulative) Low Density", of Escambia County Ordinance Number 89-27 is hereby amended to add the following:

G. Planned Unit Development - SDD Special Development District

1) Permitted Uses.

y) Automotive Repair

Section 2. Effective Date.

In accordance with Section 125.66 (2), Florida Statutes, a certified copy of this ordinance shall be filed with the Secretary of State by the Clerk to the Board of County Commissioners within ten (10) days after enactment, and this Ordinance shall take effect upon receipt of official acknowledgment that said Ordinance has been filed.

PASSED AND ADOPTED by the Board of County Commissioners of Escambia County, Florida this 4th day of January, 1990.

BOARD OF COUNTY COMMISSIONERS
OF ESCAMBIA COUNTY, FLORIDA

By: Kenneth J. Kelson, Chairman

ATTEST: JOE A. FLOWERS,
COMPTROLLER

CLERK

(SEAL)

90 JAN 10

STATE OF FLORIDA

COUNTY OF ESCAMBIA

I, JOE A. FLOWERS, COMPTROLLER, and ex-officio Clerk to the Board of County Commissioners in and for the County and State aforesaid, do hereby certify that the above and foregoing is a true and correct copy of an Ordinance as the same was duly adopted and passed at a Regular Meeting of the Board on the 4th day of January, 1990, and as the same appears on record in my office.

IN WITNESS WHEREOF, I hereunto set my hand and official seal this 19th day of January, 1990.

JOE A. FLOWERS, COMPTROLLER
AND EX-OFFICIO CLERK TO THE
BOARD OF COUNTY COMMISSIONERS
OF ESCAMBIA COUNTY, FLORIDA

By Joe A. Flowers
Clerk

(S E A L)

STATE OF FLORIDA

COUNTY OF ESCAMBIA

I, JOE A. FLOWERS, COMPTROLLER, and ex-officio Clerk to the Board of County Commissioners in and for the County and State aforesaid, do hereby certify that the above and foregoing is a true and correct copy of an Ordinance as the same was duly adopted and passed at a Meeting of the Board held on the 24th day of September, 1992, and as the same appears on record in my office.

IN WITNESS WHEREOF, I hereunto set my hand and official seal this 5th day of October, 1992.

JOE A. FLOWERS, COMPTROLLER
AND EX-OFFICIO CLERK TO THE
BOARD OF COUNTY COMMISSIONERS
OF ESCAMBIA COUNTY, FLORIDA

By Joe A. Flowers
Clerk

(S E A L)

ADOPTED ON FIRST READING 11/18/93

Dec 6 7 24 PM '93

ORDINANCE #93-25 [illegible] 9:2[illegible]

SECRETARY OF STATE

ESCAMBIA COUNTY, FLORIDA

AN ORDINANCE OF ESCAMBIA COUNTY, FLORIDA AMENDING ORDINANCE #92-2 AND CHANGING THE PROCEDURE FOR APPEALS OF DECISIONS OF THE ZONING BOARD OF ADJUSTMENT; PROVIDING FOR AUTHORITY; PROVIDING FOR PURPOSE; PROVIDING FOR AMENDMENTS TO SECTION 1 OF ORDINANCE #92-2; PROVIDING FOR AMENDMENTS TO SECTION 2 OF ORDINANCE #92-2; PROVIDING FOR AMENDMENTS TO SECTION 3 OF ORDINANCE #92-2; PROVIDING FOR SEVERABILITY; AND PROVIDING FOR AN EFFECTIVE DATE.

BE IT ORDAINED BY THE BOARD OF COUNTY COMMISSIONERS OF ESCAMBIA COUNTY, FLORIDA:

SECTION 1 - AUTHORITY. The authority for enactment of this Ordinance is the Florida Constitution and Chapters 125 F.S., 163 F.S., 166 F.S. and 177 F.S.

SECTION 2 - PURPOSE. The purpose of this Ordinance is to amend Ordinance #92-2 which provides for procedures of the Zoning Board of Adjustment. This Ordinance amends the procedure regarding appeals of Zoning Board of Adjustment decisions. The purpose of the amendments enacted by this Ordinance is to place the appeal within a court of competent jurisdiction.

SECTION 3 - AMENDMENTS TO SECTION 1 OF ORDINANCE #92-2.

A. Article VIII, Section 1 of Ordinance #89-27 is amended as follows (words <u>underlined</u> are additions and words ~~stricken~~ are deletions):

Section 1 - Establishment and Procedure

The Escambia County Zoning Board of Adjustment shall conduct any required public hearings to grant or deny applications for special exceptions, variances, and appeals made by those persons aggrieved by interpretations or administration of these regulations. Any decision made by the Board of Adjustment shall be final. <u>However, no permits will be issued based on the decision until the applicable appeal filing periods have expired and no appeal has been filed.</u> ~~unless it is appealed to and overturned by the Board of County Commissioners~~

B. The Administrative Decisions provisions of Article VIII, Section 2 of Ordinance #89-27 and as presented in Section 1 of Ordinance #92-2 are amended as follows (words <u>underlined</u>

are additions and words ~~stricken~~ are deletions):

Administrative Decisions

The Zoning Board of Adjustment is authorized to hear and to rule upon any appeal made by those persons aggrieved by an interpretation or administration of these regulations. An administrative decision, interpretation, or administration shall not be overturned by the Zoning Board of Adjustment unless said Board finds:

1) That a written application for the appeal has been submitted <u>within fifteen (15) days of the administrative decision or interpretation</u> indicating the section of Escambia County Ordinance No. 89-27, as amended, Urban Area Land Use Regulations, under which said appeal applies together with a statement of the grounds on which the appeal is based.

2) That before any administrative decision, interpretation, or administration is reversed, altered or modified, the Zoning Board of Adjustment shall make written findings that the person filing said appeal has shown how the decision of the administrative official was not supported by competent substantial evidence.

Notification: within fifteen (15) days after the date of the decision, the Zoning Board of Adjustment shall notify by certified mail the person or entity requesting the variance of the finding(s) of fact and the decision of the Zoning Board of Adjustment.

C. The appeals provisions of Article VIII, Section 2 of Ordinance #89-27 and as presented in Section 1 of Ordinance #92-2 are amended as follows (words <u>underlined</u> are additions and words ~~stricken~~ are deletions):

Appeals

~~Appeals of~~ <u>A</u> decisions of the Zoning Board of Adjustment may be ~~taken to the Board of County Commissioners~~ <u>appealed</u> by the petitioner or any owner of property located within 500 feet aggrieved by such decision <u>by filing an appropriate proceeding in a court of competent jurisdiction (Court) within thirty (30) days of the decision of the Zoning Board of Adjustment</u>. <u>Any appeal of the decision must be preceded by the filing with the Escambia County Department of Growth Management Services (Department) a "Notice of Appeal" on the form provided by the Department and within ten (10) working days from the date of such decision.</u> <u>If an appeal is filed,</u>

the owner of the property may petition the Court for injunctive relief including a request to require the Appellant to post a bond equal to the value of the potential loss created by the delay of the appeals process. If an appeal is filed with the Court and upon receipt of an appropriate written demand from the Appellant, the recording secretary of the Zoning Board of Adjustment shall deliver the entire record of the Hearing in the matter to the Court wherein the appeal has been filed. ~~Such appeals shall be submitted within ten days of the decision over which such appeal is made by filing an Application for Appeal (Notice of Appeal) specifying the grounds for appeal. The Zoning Official shall forward copies of all papers constituting the record upon which the original action was taken to the County Administrator for presentation to the Board of County Commissioners.~~

~~The Board of County Commissioners shall fix a time for hearing the appeal and give due notice in its regular meeting schedule (published in a newspaper in general circulation in Escambia County) of the intent to hear and make a decision on the appeal. Any party may appear at the hearing in person or by agent or attorney. The applicant shall deposit with the Board of County Commissioners an amount to be determined by the Board of County Commissioners from time to time, to cover cost of notice publication.~~

SECTION 4 - AMENDMENTS TO SECTION 2 OF ORDINANCE #92-2.

A. Article VIII, Section 1 of Ordinance #86-7 is amended as follows (words underlined are additions and words ~~stricken~~ are deletions):

Section 1 - Establishment and Procedure

The Escambia County Zoning Board of Adjustment shall conduct any required public hearings to grant or deny applications for special exceptions, variances, and appeals made by those persons aggrieved by interpretations or administration of these regulations. Any decision made by the Board of Adjustment shall be final. However, no permits will be issued based on the decision until the applicable appeal filing periods have expired and no appeal has been filed. ~~unless it is appealed to and overturned by the Board of County Commissioners~~

B. The Administrative Decisions provisions of Article VIII, Section 2 of Ordinance #86-7 and as presented in Section 2 of Ordinance #92-2 are amended as follows (words underlined are additions and words ~~stricken~~ are deletions):

Administrative Decisions

The Zoning Board of Adjustment is authorized to hear and to rule upon any appeal made by those persons aggrieved by an interpretation or administration of these regulations. An administrative decision, interpretation, or administration shall not be overturned by the Zoning Board of Adjustment unless said Board finds:

1) That a written application for the appeal has been submitted within fifteen (15) days of the administrative decision or interpretation indicating the section of Escambia County Ordinance No. 86-7, as amended, Land Use Regulations, UWF vicinity, under which said appeal applies together with a statement of the grounds on which the appeal is based.

2) That before any administrative decision, interpretation, or administration is reversed, altered or modified, the Zoning Board of Adjustment shall make written findings that the person filing said appeal has shown how the decision of the administrative official was not supported by competent substantial evidence.

Notification: within fifteen (15) days after the date of the decision, the Zoning Board of Adjustment shall notify by certified mail the person or entity requesting the variance of the finding(s) of fact and the decision of the Zoning Board of Adjustment.

C. The appeals provisions of Article VIII, Section 2 of Ordinance #86-7 and as presented in Section 2 of Ordinance #92-2 are amended as follows (words underlined are additions and words ~~stricken~~ are deletions):

Appeals

~~Appeals of~~ A decisions of the Zoning Board of Adjustment may be ~~taken to the Board of County Commissioners~~ appealed by the petitioner or any owner of property located within 500 feet aggrieved by such decision by filing an appropriate proceeding in a court of competent jurisdiction (Court) within thirty (30) days of the decision of the Zoning Board of Adjustment. Any appeal of the decision must be preceded by the filing with the Escambia County Department of Growth Management Services (Department) a "Notice of Appeal" on the form provided by the Department and within ten (10) working days from the date of such decision. If an appeal is filed, the owner of the property may petition the Court for injunctive relief including a request to require the

Appellant to post a bond equal to the value of the potential loss created by the delay of the appeals process. If an appeal is filed with the Court and upon receipt of an appropriate written demand from the Appellant, the recording secretary of the Zoning Board of Adjustment shall deliver the entire record of the Hearing in the matter to the Court wherein the appeal has been filed. ~~Such appeals shall be submitted within ten days of the decision over which such appeal is made by filing an Application for Appeal (Notice of Appeal) specifying the grounds for appeal. The Zoning Official shall forward copies of all papers constituting the record upon which the original action was taken to the County Administrator for presentation to the Board of County Commissioners.~~

~~The Board of County Commissioners shall fix a time for hearing the appeal and give due notice in its regular meeting schedule (published in a newspaper in general circulation in Escambia County) of the intent to hear and make a decision on the appeal. Any party may appear at the hearing in person or by agent or attorney. The applicant shall deposit with the Board of County Commissioners an amount to be determined by the Board of County Commissioners from time to time, to cover cost of notice publication.~~

SECTION 5 - AMENDMENTS TO SECTION 3 OF ORDINANCE #92-2.

A. Article VIII, Section 1 of Ordinance #89-6 is amended as follows (words underlined are additions and words ~~stricken~~ are deletions):

Section 1 - Establishment and Procedure

The Escambia County Zoning Board of Adjustment shall conduct any required public hearings to grant or deny applications for special exceptions, variances, and appeals made by those persons aggrieved by interpretations or administration of these regulations. Any decision made by the Board of Adjustment shall be final. However, no permits will be issued based on the decision until the applicable appeal filing periods have expired and no appeal has been filed. ~~unless it is appealed to and overturned by the Board of County Commissioners~~

B. The Administrative Decisions provisions of Article VIII, Section 2 of Ordinance #89-6 and as presented in Section 3 of Ordinance #92-2 are amended as follows (words underlined are additions and words ~~stricken~~ are deletions):

Administrative Decisions

The Zoning Board of Adjustment is authorized to hear and to rule upon any appeal made by those persons aggrieved by an interpretation or administration of these regulations. An administrative decision, interpretation, or administration shall not be overturned by the Zoning Board of Adjustment unless said Board finds:

1) That a written application for the appeal has been submitted <u>within fifteen (15) days of the administrative decision or interpretation</u> indicating the section of Escambia County Ordinance No. 89-6, as amended, Zoning Regulations of Perdido Key, under which said appeal applies together with a statement of the grounds on which the appeal is based.

2) That before any administrative decision, interpretation, or administration is reversed, altered or modified, the Zoning Board of Adjustment shall make written findings that the person filing said appeal has shown how the decision of the administrative official was not supported by competent substantial evidence.

Notification: within fifteen (15) days after the date of the decision, the Zoning Board of Adjustment shall notify by certified mail the person or entity requesting the variance of the finding(s) of fact and the decision of the Zoning Board of Adjustment.

C. The appeals provisions of Article VIII, Section 2 of Ordinance #89-6 and as presented in Section 3 of Ordinance #92-2 are amended as follows (words <u>underlined</u> are additions and words ~~stricken~~ are deletions):

Appeals

~~Appeals of~~ <u>A</u> decisions of the Zoning Board of Adjustment may be ~~taken to the Board of County Commissioners~~ <u>appealed</u> by the petitioner or any owner of property located within 500 feet aggrieved by such decision <u>by filing an appropriate proceeding in a court of competent jurisdiction (Court) within thirty (30) days of the decision of the Zoning Board of Adjustment</u>. <u>Any appeal of the decision must be preceded by the filing with the Escambia County Department of Growth Management Services (Department) a "Notice of Appeal" on the form provided by the Department and within ten (10) working days from the date of such decision. If an appeal is filed, the owner of the property may petition the Court for</u>

injunctive relief including a request to require the Appellant to post a bond equal to the value of the potential loss created by the delay of the appeals process. If an appeal is filed with the Court and upon receipt of an appropriate written demand from the Appellant, the recording secretary of the Zoning Board of Adjustment shall deliver the entire record of the Hearing in the matter to the Court wherein the appeal has been filed. ~~Such appeals shall be submitted within ten days of the decision over which such appeal is made by filing an Application for Appeal (Notice of Appeal) specifying the grounds for appeal. The Zoning Official shall forward copies of all papers constituting the record upon which the original action was taken to the County Administrator for presentation to the Board of County Commissioners.~~

~~The Board of County Commissioners shall fix a time for hearing the appeal and give due notice in its regular meeting schedule (published in a newspaper in general circulation in Escambia County) of the intent to hear and make a decision on the appeal. Any party may appear at the hearing in person or by agent or attorney. The applicant shall deposit with the Board of County Commissioners an amount to be determined by the Board of County Commissioners from time to time, to cover cost of notice publication.~~

SECTION 6 - SEVERABILITY. If any provision of this Ordinance is, for any reason, held to be invalid or unconstitutional by any court of competent jurisdiction, such provision and such holdings shall not affect the validity of any other provision and to that end the provisions of this Ordinance are declared to be severable.

SECTION 7 - EFFECTIVE DATE: The effective date of this Ordinance shall be the date of receipt by Escambia County of notice from the Florida Department of State that this Ordinance has been received and duly filed.

PASSED AND ADOPTED by the Board of County Commissioners of Escambia County, Florida this 6th day of December, 1993.

BOARD OF COUNTY COMMISSIONERS
OF ESCAMBIA COUNTY, FLORIDA

D.M. "MIKE" WHITEHEAD, CHAIRMAN

ATTEST: JOE J. FLOWERS
COMPTROLLER

CLERK

(SEAL)

STATE OF FLORIDA

COUNTY OF ESCAMBIA

I, JOE A. FLOWERS, COMPTROLLER, and ex-officio Clerk to the Board of County Commissioners in and for the County and State aforesaid, do hereby certify that the above and foregoing is a true and correct copy of an Ordinance as the same was duly adopted and passed at a Special Meeting of the Board held on the 6th day of December, 1993, and as the same appears on record in my office.

IN WITNESS WHEREOF, I hereunto set my hand and official seal this 7th day of December, 1993.

JOE A. FLOWERS, COMPTROLLER
AND EX-OFFICIO CLERK TO THE
BOARD OF COUNTY COMMISSIONERS
OF ESCAMBIA COUNTY, FLORIDA

By: Marilyn Singrey
Deputy Clerk

(S E A L)

STATE OF FLORIDA

COUNTY OF ESCAMBIA

I, JOE A. FLOWERS, COMPTROLLER, and ex-officio Clerk to the Board of County Commissioners in and for the County and State aforesaid, do hereby certify that the above and foregoing is a true and correct copy of an Ordinance as the same was duly adopted and passed at a Special Meeting of the Board held on the 6th day of December, 1993, and as the same appears on record in my office.

IN WITNESS WHEREOF, I hereunto set my hand and official seal this 9th day of December, 1993.

JOE A. FLOWERS, COMPTROLLER
AND EX-OFFICIO CLERK TO THE
BOARD OF COUNTY COMMISSIONERS
OF ESCAMBIA COUNTY, FLORIDA

By: Marilyn Gingrey
Deputy Clerk

(S E A L)

ORDINANCE NUMBER 90-7

AN ORDINANCE RELATING TO ESCAMBIA COUNTY, FLORIDA AMENDING THE URBAN AREA LAND USE REGULATIONS, ORDINANCE NUMBER 89-27, AS AMENDED; AMENDING ARTICLE VI, DISTRICT, BOUNDARIES, LAND USE MAP, LOTS OF RECORD, SECTION 2 - R-1 SINGLE FAMILY DISTRICT, LOW DENSITY (0-4 DU'S/ACRE), TO ALLOW UP TO TWO MOBILE HOMES AS GUEST RESIDENCES PER TWO ACRES IN ADDITION TO THE PRINCIPAL STRUCTURE; AMENDING ARTICLE VII, GENERAL REGULATIONS, SECTION 2 - NONCONFORMING USES, TO ALLOW AN EIGHT MONTH EXTENSION OF THE TIME TO ALLOW THE SUBMISSION OF THE NECESSARY FINAL PLAT UNDER CERTAIN CIRCUMSTANCES; PROVIDING FOR AN EFFECTIVE DATE.

BE IT ORDAINED BY THE BOARD OF COUNTY COMMISSIONERS OF ESCAMBIA COUNTY, FLORIDA:

Section 1. Article VI, District, Boundaries, Land Use Map, Lots of Record, Section 2 - R-1 Single Family District, Low Density (0-4 DU's/acre), of Escambia County Ordinance Nom 89-27, as amended, is amended to include the following:

B. Special Exceptions

1) Guest Residences of no more than one guest residence per dwelling unit (DU) per lot. Mobile Homes utilized as guest residences of up to two per dwelling unit (DU) per lot (minimum lot size of 3/4 acre required for one mobile home or a minimum of 2 acres required for two mobile homes utilized as guest residences) providing that the following criteria is met.

Criteria

In addition to the special exception criteria contained in Article VIII, Section 2, of Ordinance Number 89-27, as amended, a request for a special exception for mobile home(s) as guest residence(s) in R-1 Districts must conform to the following criteria:

a. The applicant must reside in the principal residence on the lot, parcel, tract where the mobile home(s) as guest residences are requested;

b. The lot, parcel, or tract must contain at least two acres in order for two mobile homes to be utilized as guest residences; otherwise, only one mobile home will be allowed as a guest residence;

c. The mobile home(s) must be utilized truly as guest residences and must be exclusively used for housing members of the immediate family of the owner of the principal residence;

d. The mobile home(s) must be of a similar or simulated exterior finish material that is in general keeping with the principal residence and the neighborhood;

e. The mobile home(s) must be completely skirted, tied down, and meet all other building and sanitary code requirements of the County;

f. The mobile home(s) must meet all other zoning setbacks and requirements; and

All Preliminary Plats and Lot Coverage Submittal Packages for commercial projects which have been received and logged into the Engineering Department by December 31, 1988, will be honored based upon current regulations. Any Preliminary Plats and Lot Coverage Submittal Packages for commercial projects which have been received and logged into the Engineering Department after December 31 1988, are required to comply with these zoning regulations. A final plat must be filed in the Engineering Department by November 30, 1989. Any final plat received in the Engineering Department later than November 30. 1989, for which a preliminary plat was submitted by December 31 1988, must be in compliance with these zoning regulations. A Building Permit must be obtained from the Building Inspections Department for approved commercial project Site and Drainage Plans, which were submitted by December 31 1988, by November 30, 1989. Approved commercial project Site and Building Plans for which Building Permits have not been obtained by November 30, 1989 must be in compliance with this ordinance.

An extension of the time to allow the submission of the necessary final plat may be granted provided that the developer could have submitted the necessary exhibits, but for a State of Florida, Department of Environmental Regulation moratorium on the Escambia County Utilities Authority wastewater treatment plants. Such provision also providing that when the moratorium is lifted by the State, an additional period of eight months is provided to allow the developer of any subdivisions which had previously filed preliminary plats, and from which all final plats could have been submitted on-time, to submit all the necessary final plat requirements and otherwise be considered a subdivision in transition of the original imposition of these zoning regulations. In such instances the following procedure, expiration date, and finding shall be used.

A. Procedure

After consideration of evidence that a developer has previously submitted a preliminary subdivision plat in accordance with the above provisions of transitioning developments which are already in the development review process, and after consideration of evidence from the Florida Department of Environmental Regulation that no further sewerage connections be permitted to a particular wastewater treatment plant owned and operated by the Escambia County Utilities Authority due to environmental reasons, the subdivision in question may be granted an additional eight months time to submit all of the required exhibits for filing a final subdivision plat. This additional time will only be granted when the moratorium for sewerage connections has been lifted by the Florida Department of Environmental Regulation.

Nothing herein presented affects the normal subdivision regulation review or fees collected in any manner. This procedure deals with the imposition or transition of certain regulations contained within this ordinance.

B. Expiration Date

This special provision is intended to grant relief only to those persons or developers who have legitimately begun the subdivision review process prior to the original enactment of this Ordinance, and only those persons or developers whose development or subdivision was located within an area then currently under a sewerage connection moratorium imposed by the Florida Department of Environmental Regulation for environmental reasons on wastewater treatment plants owned and operated by the Escambia County Utilities Authority. This special provision grants a onetime eight month extension of time during which a developer may submit all the necessary documentation, exhibits, drawings, and engineering for the filing of a final subdivision plat. This

Command: **NAS Pensacola**

Data Call Number Twenty

I certify that the information contained herein is accurate and complete to the best of my knowledge and belief.

MAJOR CLAIMANT LEVEL

T. L. McCLELLAND
NAME

Signature

Acting
Title

13 MAY 94
Date

CNET
Activity

I certify that the information contained herein is accurate and complete to the best of my knowledge and belief.

DEPUTY CHIEF OF NAVAL OPERATIONS (LOGISTICS)
DEPUTY CHIEF OF STAFF (INSTALLATIONS & LOGISTICS)

J. B. GREENE Jr
NAME

Signature

ACTING
Title

6/8/94
Date

BRAC-95 DATA CALL NUMBER 20 CERTIFICATION

I certify that the information contained herein is accurate and complete to the best of my knowledge and belief.

NEXT ECHELON LEVEL (if applicable)

M.C. VOGT, CAPT USN
NAME (Please type or print)

Signature

COMMANDER
Title

4/29/94
Date

TRAINING AIR WING SIX
Activity

I certify that the information contained herein is accurate and complete to the best of my knowledge and belief.

NEXT ECHELON LEVEL (if applicable)

W. B. HAYDEN, RADM, USN
NAME (Please type or print)

Signature

Chief of Naval Air Training
Title

9 MAY 94
Date

Naval Air Training Command
Activity

I certify that the information contained herein is accurate and complete to the best of my knowledge and belief.

MAJOR CLAIMANT LEVEL

NAME (Please type or print)

Signature

Title

Date

Activity

I certify that the information contained herein is accurate and complete to the best of my knowledge and belief.

DEPUTY CHIEF OF NAVAL OPERATIONS (LOGISTICS)
DEPUTY CHIEF OF STAFF (INSTALLATIONS & LOGISTICS)

NAME (Please type or print)

Signature

Title

Date

BRAC-95 DATA CALL NUMBER 20 CERTIFICATION

Reference: SECNAVNOTE 11000 of 08 December 1993

In accordance with policy set forth by the Secretary of the Navy, personnel of the Department of the Navy, uniformed and civilian, who provide information for use in the BRAC-95 process are required to provide a signed certification that states "I certify that the information contained herein is accurate and complete to the best of my knowledge and belief."

The signing of this certification constitutes a representation that the certifying official has reviewed the information and either (1) personally vouches for its accuracy and completeness or (2) has possession of, and is relying upon, a certification executed by a competent subordinate.

Each individual in your activity generating information for the BRAC-95 process must certify that information. Enclosure (1) is provided for individual certifications and may be duplicated as necessary. You are directed to maintain those certifications at your activity for audit purposes. For purposes of this certification sheet, the commander of the activity will begin the certification process and each reporting senior in the Chain of Command reviewing the information will also sign this certification sheet. This sheet must remain attached to this package and be forwarded up the Chain of Command. Copies must be retained by each level in the Chain of Command for audit purposes.

I certify that the information contained herein is accurate and complete to the best of my knowledge and belief.

ACTIVITY COMMANDER

W. T. R. BOGLE, CAPT, U.S. NAVY
NAME (Please type or print)

WTR Bogle
Signature

COMMANDING OFFICER
Title

4/29/94
Date

NAVAL AIR STATION PENSACOLA
Activity

Document Separator

BRANCH MEDICAL CLINIC
NAVAL AIR STATION PENSACOLA
BRAC DATA CALL #20 INPUT

POC: NAVHOSP PENSACOLA
LCDR R. LEFFERTS, MSC, USN
Telephone (904) 452-6079

A. TRAINING

A.2. Unit that trains at this installation: Naval Reserve Naval Hospital Pensacola Unit 108 (NR NH PCOLA 108) - Contributory Support.

A.3. Requirements to support training of other service components: NR NH PCOLA 108, Building 360, Contributory Support, Bi-monthly.

E. OTHER SUPPORT

E.1. Role in disaster assistance: The Director, Branch Medical Clinic, NAS Pensacola serves on the Disaster Preparedness Committee at NAS Pensacola and is a key player in all mass casualty and disaster drills held at NAS Pensacola. This includes search/rescue and local evacuation plans. Reference: NASP OPLAN 90.

E. SPECIAL MILITARY FACILITIES

E.5 Routine referral of patients: Podiatry, Occupational Health, Flight Medicine, Optometry.

E.6. Unique missions: Occupational Health, Radiation Health Officer.

I. FACILITIES

I.1. Other airfields

Name: Naval Hospital Pensacola Helicopter Pad
Use: Medical evacuation/rotor only
Distance: 3 miles from NAS Pensacola

I.2. Other military facilities

Name: Naval Hospital Pensacola
Use: Medical care
Distance: 3 miles from NAS Pensacola

~~2 certifications attached~~

Post-It™ brand fax transmittal memo 7671 | # of pages ▸ 8
To LCDR Edwards | From LCDR Lefferts
Co. NAS Pensacola | Co. NAVHOSP Pensacola
Dept. Admin Dept | Phone # 452-6079
Fax # 452-3699 | Fax # 452-6927
(Hard copy in Monday Yard mail)

REV 5/10/94

Encl (4)
ATTACH B

22 April 94

N.A.S. BRAC DATA CALL #20: NAMRL N66452

MISSION REQUIREMENTS

Question D.6: Are any new military missions planned for this installation?

Answer: Our current mission statement as noted below will remain the same.

MISSION STATEMENT:

The mission of the Laboratory is to conduct research, development, test, and evaluation in aviation medicine and the allied sciences to enhance the health, safety, and readiness of Navy and Marine Corps personnel in the effective performance of peacetime and contingency missions, and to perform such other functions or tasks as may be required by higher authority.

Question E.3: Are any new civilian or other non-DoD missions planned for this installation? If so, describe.

Answer: No new civilian or other non-DoD missions are planned for NAMRL.

FACILITIES

Question I.2: What other military facilities in the vicinity are/could be used to support the installation and tenant's mission?

Answer: The "Aeromedical Research Laboratory" at Fort Rucker, Alabama conducts medical research in aviation and could provide limited support.

Military Facility Name:	Aeromedical Research Laboratory
Actual/Proposed Use:	Life Science Research
Distance:	300 miles R/T

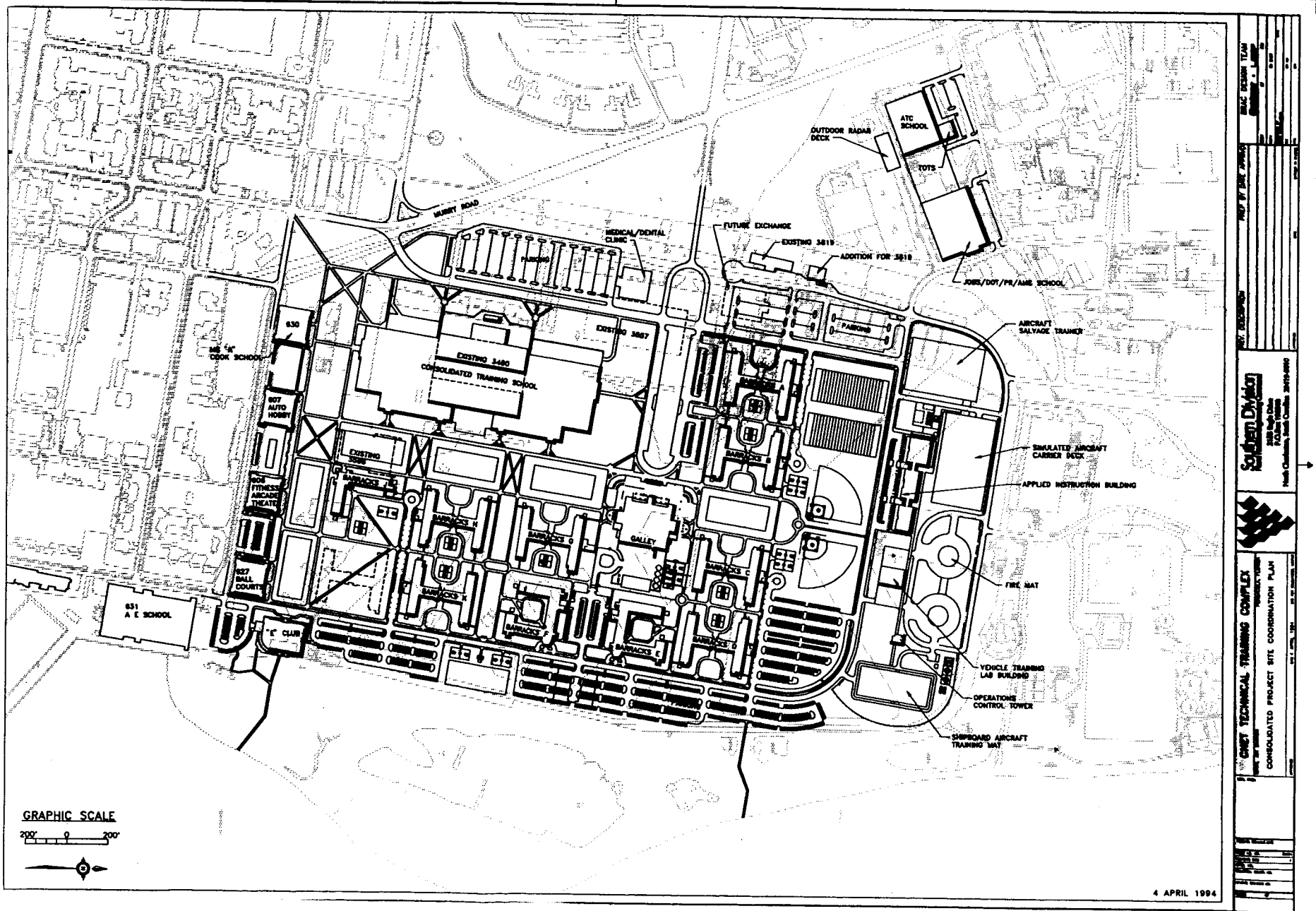

Addendum to BRAC 95, DACA CALL 3320
NAS Pensacola
5/10/94

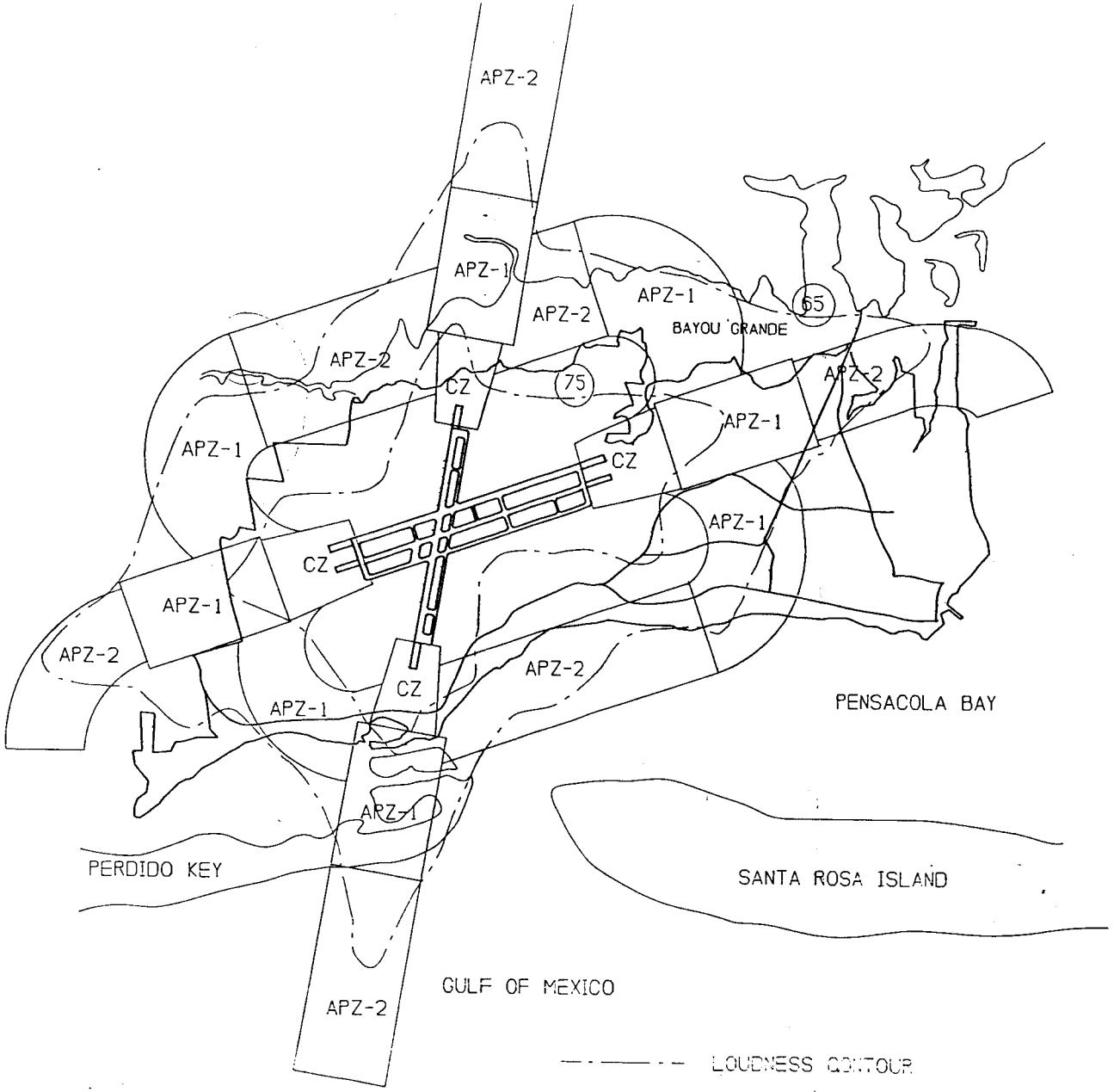
APZ-2
APZ-1
APZ-2
APZ-1
65
BAYOU GRANDE
APZ-2
APZ-2
CZ
75
APZ-1
APZ-1
CZ
APZ-1
CZ
APZ-1
APZ-2
APZ-2
CZ
APZ-1
APZ-1
PENSACOLA BAY
PERDIDO KEY
SANTA ROSA ISLAND
GULF OF MEXICO
APZ-2
LOUDNESS CONTOUR

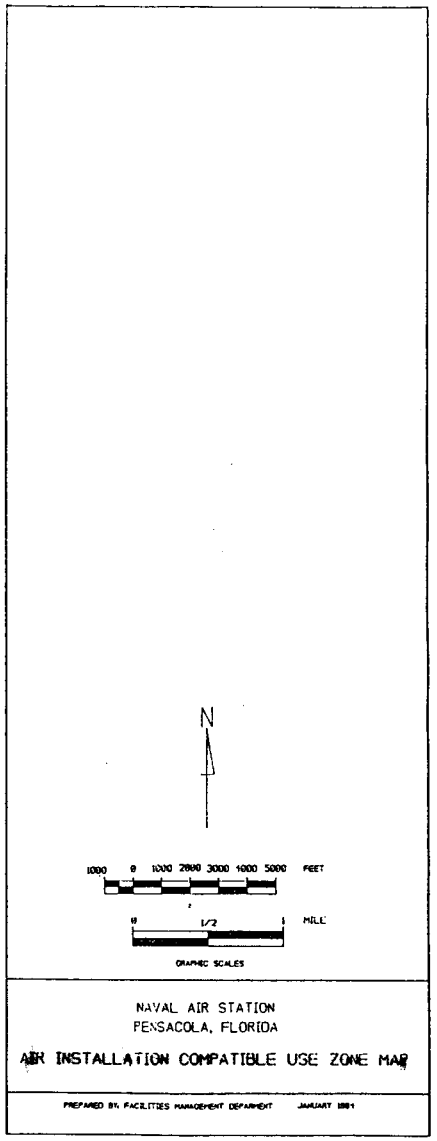
N
1000 0 1000 2000 3000 4000 5000 FEET
0 1/2 1 MILE
GRAPHIC SCALES
NAVAL AIR STATION
PENSACOLA, FLORIDA
AIR INSTALLATION COMPATIBLE USE ZONE MAP
PREPARED BY: FACILITIES MANAGEMENT DEPARTMENT JANUARY 1991

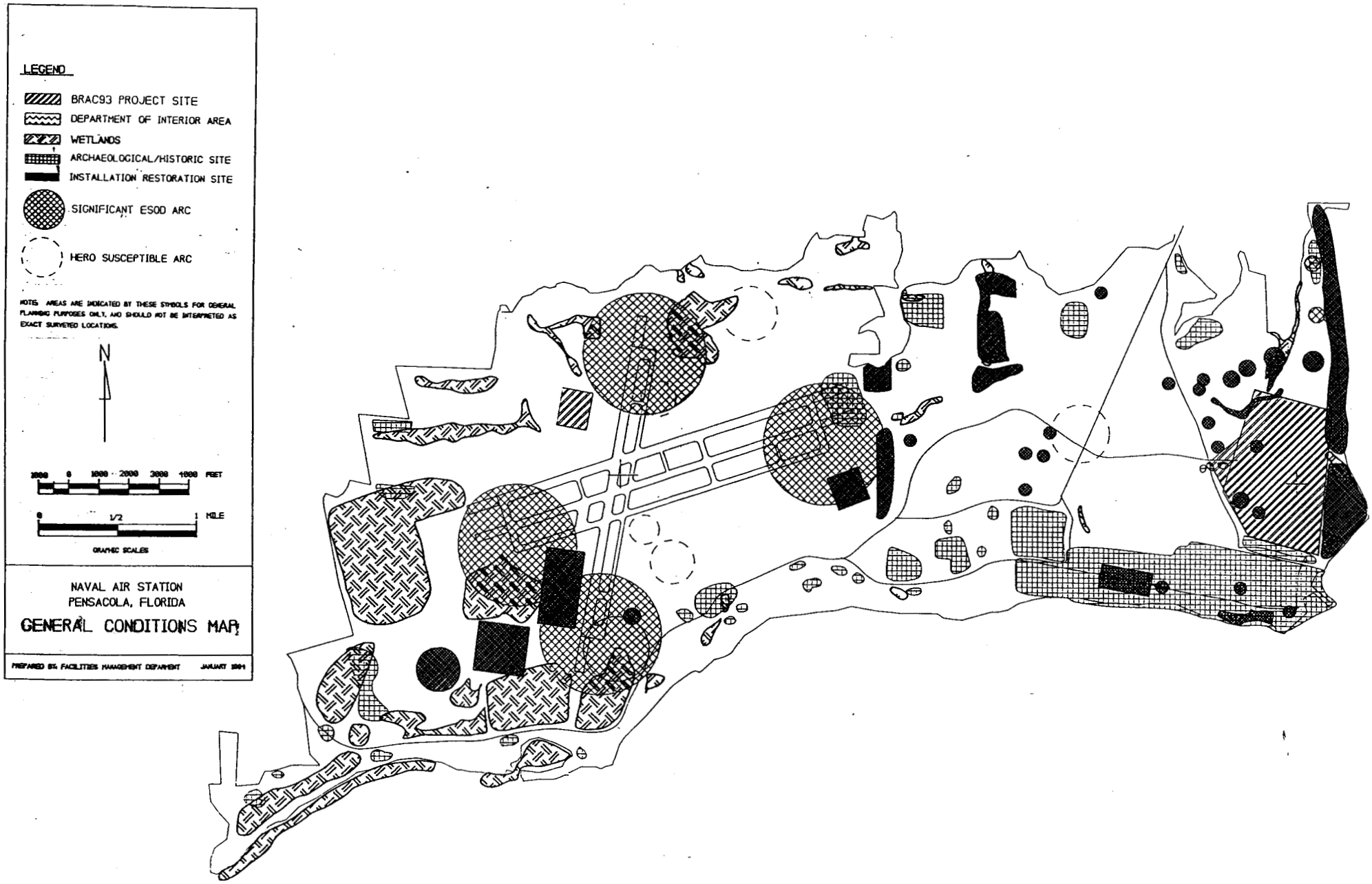
LEGEND
BRAC93 PROJECT SITE
DEPARTMENT OF INTERIOR AREA
WETLANDS
ARCHAEOLOGICAL/HISTORIC SITE
INSTALLATION RESTORATION SITE
SIGNIFICANT ESOD ARC
HERO SUSCEPTIBLE ARC
NOTE: AREAS ARE INDICATED BY THESE SYMBOLS FOR GENERAL PLANNING PURPOSES ONLY, AND SHOULD NOT BE INTERPRETED AS EXACT SURVEYED LOCATIONS.
N
1000 0 1000 2000 3000 4000 FEET
0 1/2 1 MILE
GRAPHIC SCALES
NAVAL AIR STATION
PENSACOLA, FLORIDA
GENERAL CONDITIONS MAP
PREPARED BY: FACILITIES MANAGEMENT DEPARTMENT JANUARY 1994

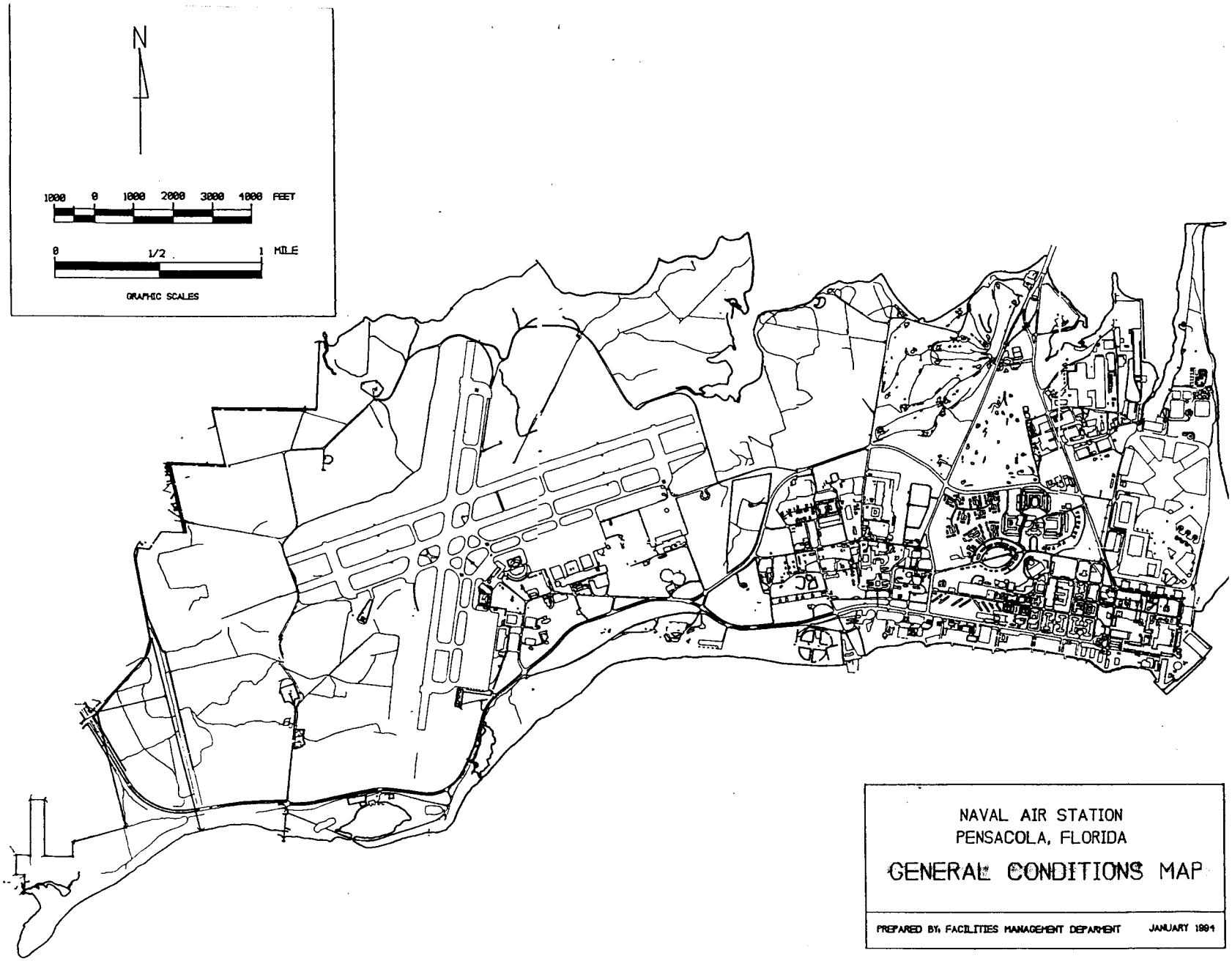

NAVAL AIR STATION
PENSACOLA, FLORIDA

GENERAL CONDITIONS MAP

PREPARED BY: FACILITIES MANAGEMENT DEPARTMENT JANUARY 1994

Pensacola

Command: **NAS Pensacola**

Data Call Number Twenty Revisions
(Pages 4, 6, 14, 46, 54, & 56, 56a, 56b, CNET TECH TRNG MAP, AICUZ & GEN MAPS, BRANCH MED. CLINIC & NAMRL ATTACHMENTS)

I certify that the information contained herein is accurate and complete to the best of my knowledge and belief.

MAJOR CLAIMANT LEVEL

J. D. ANDERSON
NAME

J. D. Anderson
Signature

Acting
Title

6/1/94
Date

CNET
Activity

I certify that the information contained herein is accurate and complete to the best of my knowledge and belief.

DEPUTY CHIEF OF NAVAL OPERATIONS (LOGISTICS)
DEPUTY CHIEF OF STAFF (INSTALLATIONS & LOGISTICS)

J. B GREENE JR
NAME

J B Greene Jr
Signature

ACTING
Title

6/8/94
Date

Pensacola

BRAC-95 DATA CALL 20
NAS PENSACOLA UIC 00204

CNATRA REVISIONS OF 5/18/94, Pages 4,6,14,46,54 & 56

I certify that the information contained herein is accurate and complete to the best of my knowledge and belief.

NEXT ECHELON LEVEL (if applicable)

P. R. STATSKEY, CAPT, USN
~~W. B. HAYDEN, RADM, USN~~
NAME (Please type or print)

Signature

Chief of Naval Air Training (ACTING)
Title

Date 25 May 94

Naval Air Training Command
Activity

I certify that the information contained herein is accurate and complete to the best of my knowledge and belief.

MAJOR CLAIMANT LEVEL

NAME (Please type or print)

Signature

Title

Date

Activity

I certify that the information contained herein is accurate and complete to the best of my knowledge and belief.

DEPUTY CHIEF OF NAVAL OPERATIONS (LOGISTICS)
DEPUTY CHIEF OF STAFF (INSTALLATIONS & LOGISTICS)

NAME (Please type or print)

Signature

Title

Date

Revision

BRAC-95 DATA CALL 20
NAS PENSACOLA UIC 00204

REVISIONS OF 5/10/94, PAGES 56(a), & 56(b), CNET TECH TRNG MAP, AICUZ & GEN MAPS, BRANCH MED. CLINIC & NAMRL ATTACHMENTS

I certify that the information contained herein is accurate and complete to the best of my knowledge and belief.

NEXT ECHELON LEVEL (if applicable)

P. R. STATSKEY, CAPT, USN
~~W. B. HAYDEN, RADM, USN~~
NAME (Please type or print)

P R Statskey
Signature

Chief of Naval Air Training (ACTING)
Title

25 May 94
Date

Naval Air Training Command
Activity

I certify that the information contained herein is accurate and complete to the best of my knowledge and belief.

MAJOR CLAIMANT LEVEL

NAME (Please type or print)

Signature

Title

Date

Activity

I certify that the information contained herein is accurate and complete to the best of my knowledge and belief.

DEPUTY CHIEF OF NAVAL OPERATIONS (LOGISTICS)
DEPUTY CHIEF OF STAFF (INSTALLATIONS & LOGISTICS)

NAME (Please type or print)

Signature

Title

Date

THE DEPUTY SECRETARY OF DEFENSE

WASHINGTON, D.C. 20301

24 OCT 1994

MEMORANDUM FOR SECRETARIES OF THE MILITARY DEPARTMENTS
CHAIRMAN OF THE JOINT CHIEFS OF STAFF
UNDER SECRETARIES OF DEFENSE
DIRECTOR, DEFENSE RESEARCH AND ENGINEERING
ASSISTANT SECRETARIES OF DEFENSE
GENERAL COUNSEL OF THE DEPARTMENT OF DEFENSE
INSPECTOR GENERAL OF THE DEPARTMENT OF DEFENSE
DIRECTOR, OPERATIONAL TEST AND EVALUATION
UNIFIED AND SPECIFIED COMMANDERS-IN-CHIEF
ASSISTANTS TO THE SECRETARY OF DEFENSE
DIRECTORS OF THE DEFENSE AGENCIES

SUBJECT: Consolidation of Fixed-Wing Flight Training

In April 1993 the Secretary of Defense directed the Secretary of the Air Force, assisted by the Secretary of the Navy, to:

1. Consolidate initial fixed-wing aircraft training for all Services and transition to a common primary training aircraft; and

2. Combine follow-on flight training into four common pipelines (Navy fighter attack, Air Force fighter/bomber, Navy and Air Force tanker/transport/maritime patrol, and helicopter).

In response, the Navy and the Air Force are in the process of implementing joint fixed-wing flight training initiatives that carry out the Secretary's directive. A common pipeline for helicopter training is still under review. A schematic description of their approach is in Attachment 1.

In addition, the Navy and Air Force have proposed other joint flight training initiatives for the functions of navigator, weapon system officer, and electronic warfare officer, as illustrated in Attachment 2.

I am encouraged by the cooperation and progress we have made in bringing jointness to flight training and hope that it serves as a model in other areas where the Department might benefit from increasing "jointness." This memorandum, therefore, provides my approval for Air Force/Navy plans to implement these joint fixed-wing flight training programs, as well as for their additional joint training initiatives. The Secretaries of the Navy and Air Force, and others that may be involved, should take actions to implement these programs as soon as possible.

21140

JOINT FIXED-WING TRAINING

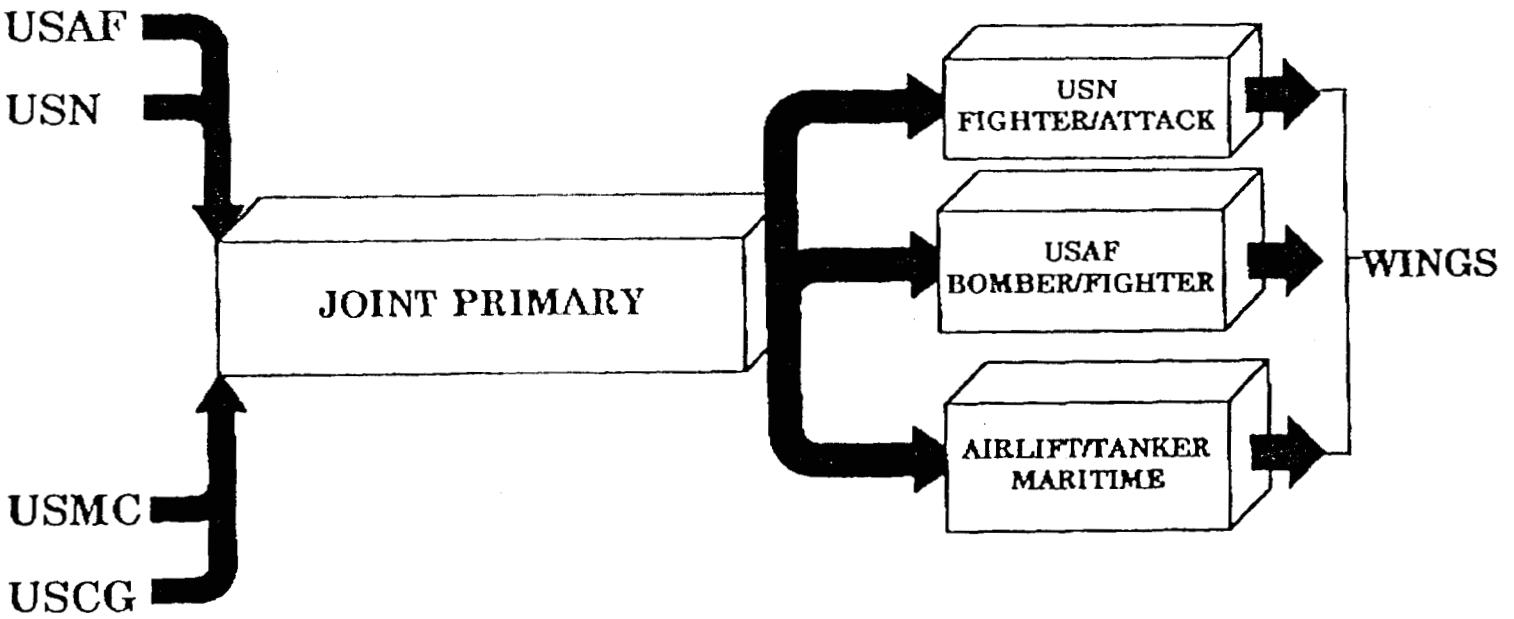

Attachment 1

JOINT NAVIGATOR TRAINING

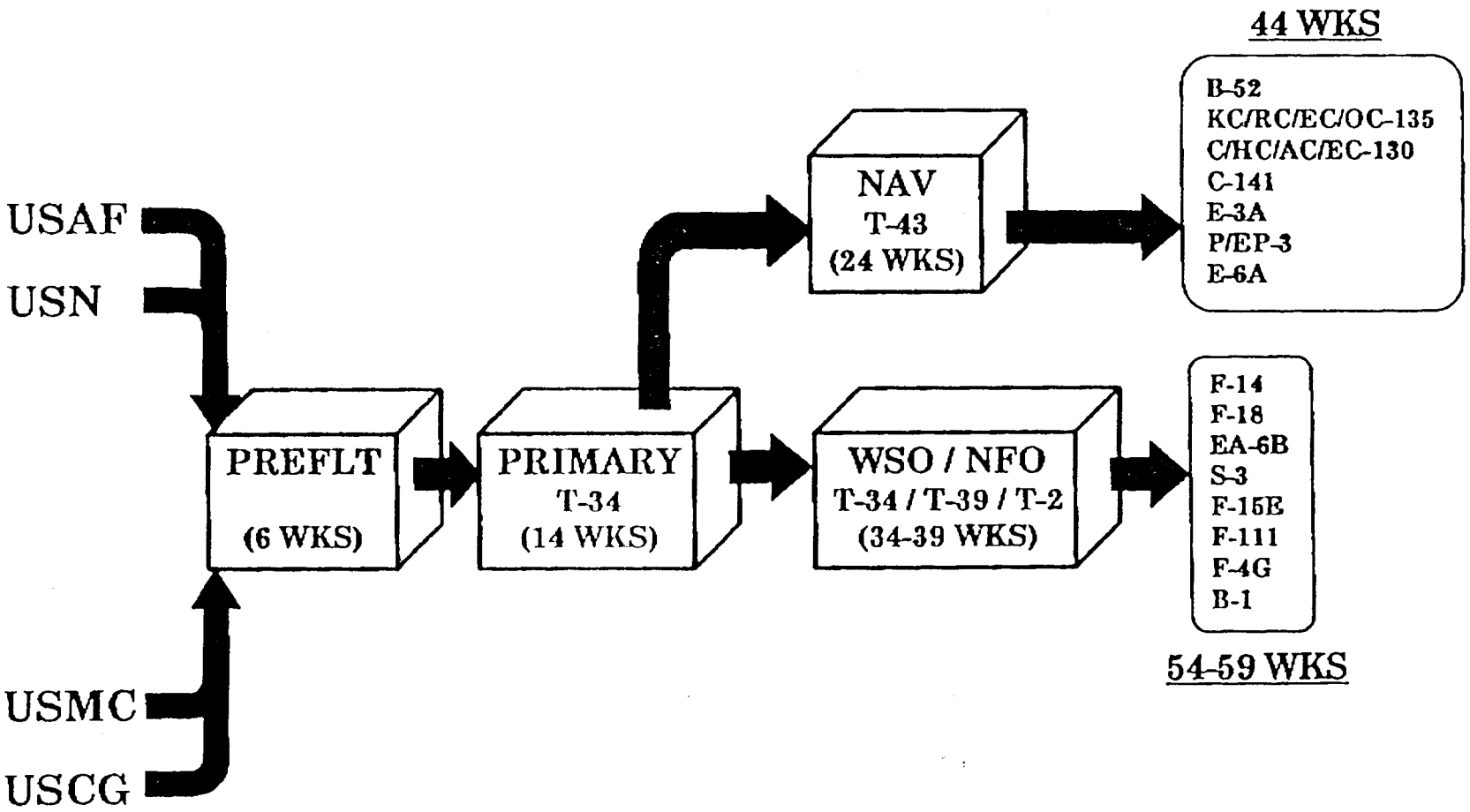

JOINT ENTRY LEVEL EWO TRAINING

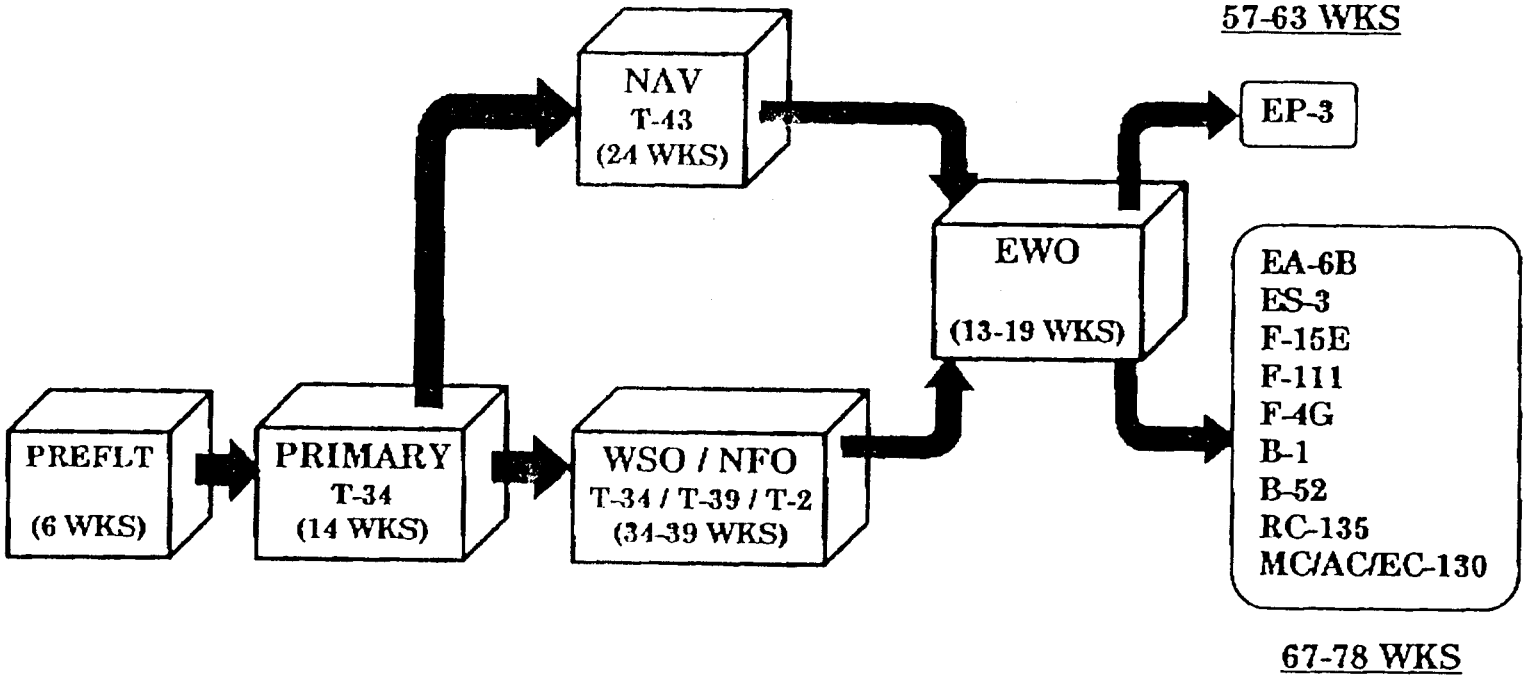

DEPARTMENT OF THE NAVY
OFFICE OF THE SECRETARY
WASHINGTON, D.C. 20350-1000

LT-0629-F13
BSAT/MB
7 March 1995

The Honorable Howell Heflin
United States Senate
Washington, D.C. 20510

Dear Senator Heflin:

Thank you for your letter of March 1, 1995, to the Chief of Legislative Affairs, regarding the Department of the Navy's proposal to transfer the undergraduate primary pilot training mission from Naval Air Station (NAS) Corpus Christi, Texas, to NAS Whiting Field, and NAS Pensacola, Florida. I am responding for Rear Admiral Natter.

Our recommendation estimates 71 T-34C aircraft will be relocated from NAS Corpus Christi to NAS Whiting Field. Similarly, 57 T-44 multi-engine propellor training aircraft would be transferred from NAS Corpus Christi to NAS Pensacola. Associated with these aircraft is the relocation of 332 personnel to Whiting Field; this number includes 87 officers, 9 enlisted, 231 students and 5 civilians. Additionally, 413 personnel would relocate to NAS Pensacola, including 80 officers, 55 enlisted, 185 students and 93 civilians. This effort will result in the consolidation of all undergraduate primary pilot training in the West Florida complex.

No military construction is anticipated at NAS Whiting Field to accommodate the transfer of the pilot training mission. The cost of construction at NAS Pensacola is estimated to be $3.9 million.

It should be noted that the foregoing figures are those used in our analysis. The exact numbers of aircraft and personnel to relocate, the timing of the moves, and the actual MILCON costs will be worked out by the operational chain of command during the implementation process should our recommended realignment of NAS Chorpus Christi be approved.

Again, thank you for your letter to the Chief of Legislative Affairs. If we can be of any further assistance, please let me know.

Sincerely,

C. R. NEMFAKOS
Vice Chairman,
Base Structure Evaluation Committee

Document Separator

CONGRESSIONAL QUESTIONS SUBMITTED FOR THE RECORD

UNDERGRADUATE PILOT TRAINING

Questions submitted by Congressman Smith:

1. Since the Navy has recommended relocating the Naval Air Technical Training Center (NATTC) from Lakehurst, NJ, to Pensacola, do you envision recreating the Carrier Aircraft Launch and Recovery System (COLASSES) at Pensacola or do you expect to disassemble, package, ship and reinstall those devices that are critical to training pilots for flying off and onto aircraft carriers?

2. At what cost do you envision recreating the unique aircraft flight training facility in Pensacola?

3. Do facilities exist at Pensacola for the housing of the Lakehurst NATTC students?

4. What type of delay or disruptions are anticipated or planned for in the training of these aircraft carrier student pilots while the training facility is disassembled, moved and recreated in Pensacola?

Questions submitted by Senators Shelby and Heflin and Congressman Everett:

1. In November of 1994, the Joint Cross-Service Group on Undergraduate Pilot Training submitted three different alternatives for consideration by the military departments and Secretary Perry. According to documents submitted to the BRAC, each alternative reduced excess capacity while maintaining high military value. Each of the three alternatives consistently recommended consolidating all military undergraduate helicopter pilot training at Fort Rucker.

However, these recommendations were not adhered to in there entirety. Secretary Perry chose not to consolidate UHPT at Fort Rucker as recommended due to high MILCON costs associated with closing Whiting NAS. He then directed consolidating all Navy initial fixed wing training at Whiting NAS.

a. Why is it that consolidation of UHPT at Ft. Rucker was not adopted?

b. Since the Navy is moving all of its initial fixed wing training to Whiting NAS, wouldn't limited space be freed-up if UHPT was moved to Ft. Rucker?

c. From an efficiency standpoint, doesn't it make sense to have all initial rotary wing training dedicated at one location?

2. On March 30, 1993 General Colin Powell stated at the House Armed Services Committee Army Posture Hearing that, "I believe the proper place to do the centralization (of UHPT) and where it can be done very well is at Fort Rucker, Alabama." He went on to say, "I am committed to push this as hard as possible because there are real savings here and this is where we ought to find the savings."

The cost to transfer the UHPT operation at Whiting Field to Fort Rucker is less than $18 million dollars. In 1992 the DoD IG reported that relocation of UHPT to Fort Rucker would save at least $79 million dollars over 5 years.

a. Is this savings estimate still valid today?

3. In a proposal to the Roles & Missions Commission, the Army has stated that by consolidating all primary DoD rotary wing training, integration and standardization among the services would be enhanced to truly support jointness. Each of the services would continue to provide advanced training for their own unique aspects of rotary wing aviation.

The Army has the capacity to train all of DoD's primary helicopter pilot requirements without any need for expansion or new construction.

a. From an efficiency and interoperability standpoint, doesn't it make sense for all introductory helicopter pilot training to be conducted by the Army?

4. During the BRAC 95 Navy hearing earlier this year, General Mundy commented that in the 1970's the Army was training Marine helicopter pilots, and that this arrangement worked very well.

a. Is there any reason why the Marine Corps couldn't return to this arrangement?

5. In 1992, the JCS report on Roles & Missions recommended consolidation of all primary helicopter training with the Army. A team led by the Navy was tasked by Secretary of Defense Aspin to review this recommendation. Their findings concluded that consolidation would need to be put on hold until primary training for both fixed wing and rotary wing could be evaluated together, the service and operating costs of the new TH-67 trainer had been determined, and that the decision would be made with the context of a base closure round.

a. Each of these points has been satisfied, yet DoD only adopted the fixed wing portion of the Cross-Service Group recommendation. Why was rotary wing training ignored?

6. Earlier this year, the Navy testified before the BRAC 95 commission that the consolidation of Navy helicopter training with the Army was not feasible because it was a "people" issue, or a quality of life issue and that Navy Pilots fly in more extreme weather conditions at sea than the Army does. If that in fact is the case, why does the Pentagon continue to request Army helicopters and pilots to support naval missions?

A number of Army missions in support of Naval operations:

1983: Operation Urgent Fury
*Shipboard operations involving the Army's 18th Airborne Corps: UH-60's, OH-58A/C's, AH-1's

1987: Operation Prime Chance
*Shipboard and overwater operations involving the Army's 4/17th CAV (now 4/2) with OH-58D's
*valid CONOPS mission today

1994: Operation Uphold Democracy - Haiti
*10th Mountain Division operated from the USS Eisenhower
*OH-58D's had extensive missions prior to invasion
*UH-60's, CH-47's, OH-58A/C's and AH-I's transported troops and equipment to the AO for several days, followed by command & control missions

Each Army Aviation unit has a task for shipboard operations incorporated in their mission essential list of tasks. The Army trains for shipboard operations and performs shipboard operations.

7. In 1992, MGen. Dave Robbins, then-Commander of the Army Aviation Center, noted that one of the main reasons the Navy was opposed to consolidating this training with the Army was because the Navy used initial fixed-wing training as a "cutting" tool for students.

a. Do you believe this to be the case, and is there any legitimate reason why the Navy needs this extra "cutting" tool?

b. Could the Navy use the Army's training syllabus that places student pilots directly into the rotary wing pipeline?

8. According to the DoD IG, "Relocating the Navy's primary helicopter training to Fort Rucker would relieve ground and air traffic congestion at Whiting Field NAS."

a. Is there a problem with congestion at Whiting Field, both in the air and on the ground? If so, would relocation of the Navy's Undergraduate Helicopter Pilot Training program free up space at Whiting Field?

b. How does Fort Rucker compare with Whiting with regard to available space?

c. Since the Army already owns nearly 80% of all DoD helicopters, does Fort Rucker have the capacity to train all of DoD's primary helicopter pilot requirements?

DEFENSE BASE CLOSURE AND REALIGNMENT COMMISSION

OPEN MEETING EXCERPTS

9:00 a.m.

345 Cannon House Office Building
Washington, D.C.

Monday, March 6, 1995

COMMISSIONERS PRESENT:

Senator Alan J. Dixon, Chairman
Mr. Alton W. Cornella
Ms. Rebecca G. Cox
General J.B. Davis, USAF (Ret.)
Mr. S. Lee Kling
Rear Admiral Benjamin Montoya, USN (Ret.)
Major General Josue Robles, USA (Ret.)
Mrs. Wendi Louise Steele

PANEL I:

The Honorable John H. Dalton
Secretary of the Navy

Admiral Jeremy M. Boorda
Chief of Naval Operations

General Carl E. Mundy Jr.
Marine Corps Commandant

The Honorable Robert B. Pirie Jr.
Assistant Secretary of the Navy for
Installations and Environment

Mr. Charles Nemfakos

PANEL II:

* * * * * *

1 CHAIRMAN DIXON: Thank you, Admiral Montoya.

2 General Robles.

3 COMMISSIONER ROBLES: Mr. Secretary, you mentioned

4 previously that part of the rationale, or one of the

5 benefits, I would say, of the redirecting process between the

6 '93 round and '95 round were substantial savings, and I

7 assume those substantial savings impacted heavily on your

8 overall economics for the '95 round.

9 Now, the question I have is, did you take the other

10 side of this? Because obviously, when there were some

11 recommendations in the '93 round, there were savings

12 attributed to those recommendations and, as you reverse those

13 or change those, you have to offset those savings with the

14 savings for this new round. How did all that work out?

15 SECRETARY DALTON: Yes, sir, Mr. Commissioner. We

16 evaluated the previous recommendations and realized that some

17 dollars, if not expended, were in the process of being

18 expended, and recognized that that would be the case, but the

1 overall savings from the redirects outweighed those
2 considerations.
3 COMMISSIONER ROBLES: The second question, cross-
4 servicing. We've talked a little bit about cross-servicing,
5 and it was interesting.
6 I remember, even when I was still back in the
7 Pentagon, that we had an extensive review group, cross-
8 service study group. They made a lot of recommendations.
9 Yet, it appears that not many of the recommendations were
10 adopted by this particular BRAC round.
11 And being pragmatic, and understanding inter-
12 service rivalry and a lot of other things, this is not along
13 that vein. I just have a specific question.
14 I know for many years we've been talking about
15 rotary aviation training, and I understand that one of the
16 recommendations of the cross-service group was that the Naval
17 Air Station Whiting Field, Florida be closed and that all

1 rotary wing training go to Fort Rucker. Yet, that did not
2 come out in your final recommendations.
3 Any rationale for why that wasn't done?
4 SECRETARY DALTON: Yes, sir. And we did review
5 that recommendation and found that, in terms of our aviation
6 training is for helicopters, it is different than what is
7 done between Whiting and at Fort Rucker.
8 We are training aviators to fly over water, to land
9 on ships. It does take different qualifications and
10 different training and it was our judgment that it made sense
11 not to do cross-servicing here and not to do that on a joint
12 basis.
13 But I would defer to either Admiral Boorda or
14 General Mundy, if they'd like to elaborate further on that.
15 ADMIRAL BOORDA: Let me simply say that, for the
16 Navy part of it -- and we train our helicopter pilots
17 together -- we're training to a different requirement. Were

1 we to move together, we would have to recreate Whiting Field
2 at Rucker, and the cost would not make sense.
3 We have a very different expectation for our
4 helicopter pilots.
5 GENERAL MUNDY: We probably are the closest
6 together in the green suit sense. And certainly, as you
7 know, Commissioner, during the Vietnam War, we trained some
8 pilots up at Rucker and that's worked out. They turned out
9 great.
10 Fundamentally, the Naval aviator, be he a sailor or
11 a Marine or a she, for that matter, needs the additional, for
12 example, instrumentation training. We train about 30 more
13 hours in instrumentation training because of the over-water,
14 bad weather need for operating our force.
15 For the Marine Corps, looking ahead, one of the
16 things that will drive us is the need to continue to be able
17 to have a pilot that is trained with basic fixed wing skills
18 and then becomes a rotary wing pilot.

1 The reason for that is, as we transition, beginning
2 in a very few years, into the V-22 aircraft, that amounts to
3 an airplane that takes off like a helicopter but then has the
4 characteristics of a fixed wing aircraft in flight at about
5 250 or 275 knots at extended ranges. So it's fundamentally
6 important to us to be able to continue to bring them up the
7 fixed wing track and then transition into rotary wing.
8 COMMISSIONER ROBLES: I understand that, and I
9 understand the complexity. Do either one of you see --
10 either Admiral Boorda or General Mundy -- that maybe down the
11 road, at least for the very entry level rotary wing part of
12 it, there will be some commonality of training at a central
13 site and then, for the unique aspects of carrier landings and
14 over-water --
15 ADMIRAL BOORDA: General, only if it makes
16 financial and people sense -- financial sense, in the case of
17 not having to go through all the simulator things we have to
18 go through in the instrument training; and people sense in

1 that we don't move people back and forth from one place to
2 another to do something we can do in one place relatively
3 quickly.
4 So I mean, it has to be financially attractive and
5 it also has to treat our people properly, and so far it
6 doesn't meet either of those tests nor does it fulfill the
7 requirements that the two of us have talked about.
8 COMMISSIONER ROBLES: One final question. Last
9 week, when the SECDEF was here, he briefed the interesting
10 proposal by the Air Force that it makes economic sense to
11 downsize five depots instead of closing one or two depots.
12 If it's so good, why didn't your service, the Naval service,
13 take that on and why did you come at it from a different
14 approach -- you and the Army, by the way.
15 SECRETARY DALTON: We closed 50 percent of our
16 capacity with respect to depots in the last round. And, as
17 Admiral Boorda has pointed out, we now have a fixed wing
18 depot on the East Coast, we have one on the West Coast, and

1 we have one helicopter depot now. That's really down to what
2 we need. We didn't have any reason to close another depot.
3 It didn't make sense for us to close another depot.
4 In terms of our general approach, it appears to us
5 that we've had better experience when we wanted to realize a
6 savings to actually make a closure as opposed to a
7 downsizing, but I don't really know the background or don't
8 know the analysis that the Air Force did. I'm sure that, in
9 their analysis, it made more sense to take the approach that
10 they took.
11 COMMISSIONER ROBLES: Thank you.
12 CHAIRMAN DIXON: I thank you, General Robles. Mrs.
13 Steele, please.
14 COMMISSIONER STEELE: Thank you. Mr. Secretary, is
15 it the Navy policy to perform carrier refueling overhauls at
16 Newport News, rather than at a public shipyard? If so, did
17 this have any effect on the Navy's shipyard recommendations?

1 ADMIRAL BOORDA: No. It is the Navy policy to look
2 at that work as it comes up and do it in the most cost-
3 effective way.
4 COMMISSIONER STEELE: Several Navy recommendations
5 move industrial and technical missions at smaller facilities
6 to shipyards in aviation depots. Were any similar missions
7 considered for relocation to Long Beach Naval Shipyard, such
8 as missions currently being performed at Marine Corps
9 Logistics Base Barstow?
10 GENERAL MUNDY: No, Commissioner Steele. The
11 Marine Corps logistics bases are rather unique in the way
12 that they operate.
13 They are multi-commodity logistics centers and they
14 do not provide, really, a depot function in the classic sense
15 of what a depot does but, rather, they are a direct support
16 agency located on each coast to provide, within one day,
17 direct support capability or response to rapidly deploying
18 forces that are on the go all the time.

Document Separator

ROTARY WING TRAINING 216 HART SENATE OFFICE BLDG. DSCRC APRIL 17, 1995 HEARING

1 A F T E R N O O N S E S S I O N

2 (1:00 p.m.)

3 COMMISSIONER DAVIS: Good afternoon, ladies and

4 gentlemen. Welcome to our afternoon session. I'm General

5 J.B. Davis. It's my honor to chair this portion of the

6 hearing, and I do it with some trepidation, because Senator

7 Dixon is such a great Chair.

8 But you will hear testimony from the Undergraduate

9 Pilot Training Joint Cross Service Group, of course, an area

10 of great importance, as far as I'm concerned, because it not

11 only services the services but services the national asset of

12 pilots.

13 We're joined by -- and I'd like to welcome

14 Mr. Louis C. Finch, Deputy Undersecretary of Defense for

15 readiness, who headed up the UPT Group, our senior Defense

16 personnel for this morning, General Shane, of course, General

17 Blume, Mr. Nemfakos, and Ms. Kelleher, I guess, will be here

18 later.

19 Again, there are no opening statements -- there you

20 are. We can begin as soon as I've sworn in Mr. Finch.

21 Everybody else has been sworn. Before I start, Mr. Finch, is

22 there anybody that will provide testimony here this afternoon

1 site F-117 training. Those are not unique as far as the
2 military departments are concerned, if it is economically
3 feasible to do that.
4 COMMISSIONER MONTOYA: Just a follow-on question.
5 In visiting that base, it was gratifying to see some very
6 successful joint training going on. To see Navy pilots and
7 Air Force pilots praise each other, supporting each other was
8 truly a joy. Where will that go if you do close Reese?
9 GENERAL BLUME: All of the bases, sir, that do
10 primary training, will have what will be a replica of that
11 particular example, and that will continue following the BRAC
12 once it is decided which bases will stay and which one will
13 go.
14 COMMISSIONER MONTOYA: I must say that was very,
15 very gratifying. There were no service barriers there,
16 Charlie. They were really working well together and willing
17 to say so publicly. That's all I have, Mr. Chairman.
18 COMMISSIONER DAVIS: Thank you, Admiral Montoya. I
19 appreciate the time back. Mr. Chairman.
20 CHAIRMAN DIXON: Thank you very much, Mr. Chairman.
21 Charlie, I think I'm going to pick on you here a little, if
22 you don't mind. Now that my friend Admiral Montoya has been

1 so complimentary, let me jump on you a little bit.

2 I have a letter here from Senators Shelby and

3 Heflin and Congressman Everett, and it touches on a subject

4 matter that I've asked about from time to time and been

5 somewhat confused about.

6 " Dear Mr. Chairman, as you prepare for your April

7 17 hearing on the Joint Cross Service Working Groups and so

8 forth, we would be most appreciative if you would raise a

9 number of issues with regard to the consolidation of

10 undergraduate pilot training and so forth.

11 "We applaud the addition of the Joint Cross Service

12 Working Groups into the base closure process. They provided

13 a new and important analysis and so forth. Unfortunately, in

14 the case of undergraduate pilot training, the Pentagon acted

15 on only half of the mission.

16 "While they agreed that introductory fixed-wing

17 training operations could be consolidated between the Air

18 Force and the Navy, the Pentagon chose not to act on the

19 recommendation to consolidate primary helicopter training

20 between the Navy and the Army.

21 "We believe this a grave mistake," and so forth. I

22 know it's an old saw, Mr. Nemfakos, but let me get into part

1 of it here. In November 1994, the Joint Cross Service Group
2 on Undergraduate Pilot Training submitted three different
3 alternatives for consideration by the military departments
4 and Secretary Perry.
5 According to documents submitted to the BRAC, each
6 alternative reduced excess capacity while maintaining high
7 military value. Each of the three alternatives consistently
8 recommended consolidating all military undergraduate
9 helicopter pilot training at Fort Rucker.
10 So let's stop there, and then we'll go on to some
11 more from there, but what do you say to that? I know
12 that's -- like I say, we've been over this ground a lot of
13 times. I know we're not on something new, but I'd just like
14 to hear one more time.
15 MR. NEMFAKOS: Yes, sir, Senator. I think the
16 issue revolves around the word "consolidate." That is not
17 the recommendation from the Joint Cross Service Group.
18 CHAIRMAN DIXON: Okay.
19 MR. NEMFAKOS: The recommendation from the Joint
20 Cross Service Group was co-locate, and I believe, although I
21 was not part of that group, but I have an understanding of
22 what they were looking at, I believe the reason is that there

is a fundamental difference in perspective of how the Navy and the Marine Corps desire to train their pilots from a operational perspective.

So the issue was to co-locate. That issue of co-locating, as opposed to consolidating, is a very important one because we use different systems both in terms of aircraft systems as well as simulators and ground support systems to train those bodies of pilots.

And so I think that's a fundamental difference that the Department of the Navy, both the Navy and Marine Corps and the service chiefs of those two services are convinced that the way we are training our pilots and the systems we are using to train those pilots are the correct thing, given the way we utilize them.

CHAIRMAN DIXON: Are you satisfied with what's recommended in this round to treat this problem?

MR. NEMFAKOS: Yes, sir.

CHAIRMAN DIXON: Now, on March 30, 1993, General Powell stated at the House Armed Services Committee Army Posture Hearing, "I believe the proper place to do the centralization of UHPT where it can be done very well is at Fort Rucker, Alabama."

1 He went on to say, "I am committed to push this as
2 hard as possible, because there are real savings here. This
3 is where we ought to find the savings. The costs to transfer
4 the UHPT operation at Whiting Field to Fort Rucker is less
5 than $18 million," it's asserted here.
6 "In '92, the DODIG reported that relocation of UHPT
7 to Fort Rucker would save at least $79 million over five
8 years." What do you say to that?
9 MR. NEMFAKOS: Well, I have the highest regard for
10 the General, having worked with him off and on since the days
11 he was a colonel, and I'm not going to argue with him because
12 I don't know where that data came from.
13 I do know that the certified data that we have in
14 hand shows a cost of over $150 million to move the helicopter
15 portion of training from Whiting to Fort Rucker to co-locate
16 it there.
17 CHAIRMAN DIXON: All right. "During the BRAC '95
18 Navy hearing, as you know, earlier this year General Mundy
19 commented that in the '70s the Army was training marine
20 helicopter pilots and that this arrangement worked very well.
21 Is there any reason why the Marine Corps couldn't return to
22 this arrangement?"

1 MR. NEMFAKOS: I would say to you that what General
2 Mundy was probably referring to were the measures that we had
3 to take because of surge requirements to use capacity that we
4 have and not necessarily the desirable methodology that we
5 want to train.
6 Given the changes, however, that are coming in the
7 Marine Corps inventory with the introduction of the V-22,
8 which, as you know, Mr. Chairman, works both as a helicopter
9 but then also works as a traditional prop plane, I don't know
10 that that statement by General Mundy was an indication that
11 he was prepared to change the syllabus of the training for
12 Marine Corps helicopter pilots.
13 CHAIRMAN DIXON: Mr. Nemfakos, according to the
14 Inspector General for the DoD, and I quote, "Relocating the
15 Navy's primarily helicopter training to Fort Rucker would
16 relieve ground and air traffic congestion as Whiting Field.
17 Is there a problem at Whiting Field both in the air and on
18 the ground, and if so, would relocation of Navy's
19 Undergraduate Helicopter Pilot Training Program free of space
20 at Whiting Field?"
21 MR. NEMFAKOS: In our military value analysis, and
22 I believe the staff has the matrices and can probably give

1 you a better, more specific answer that I can right now, I do
2 not believe that we found that there was air traffic
3 congestion in the Pensacola Whiting area that worked to the
4 detriment of the value of that activity.
5 Obviously, moving anything out of that area is
6 going to relieve whatever traffic there is, but I believe
7 that the military value matrix, which the staff has, can
8 paint a more clearer picture for you, because there are a
9 whole series of considerations that were included in there on
10 the traffic issue.
11 CHAIRMAN DIXON: If you don't mind, I'm going to
12 send this letter to you. I've just taken excerpts out of the
13 letter. I'd appreciate it, as I do for all members of the
14 Congress, a response in writing to the letter in writing.
15 MR. NEMFAKOS: Yes, sir. We'll be happy to do
16 that.
17 CHAIRMAN DIXON: Thank you very much, Mr. Nemfakos.
18 MR. NEMFAKOS: Yes, sir.
19 COMMISSIONER DAVIS: Thank you, Senator.
20 Commissioner Cox.
21 COMMISSIONER COX: Thank you. Mr. Finch, I
22 apologize. I was in and out of the room. So if I'm asking

1 you something you've already covered, I apologize in advance.
2 But I am still a little bit confused about
3 measuring of capacity and whether we're correctly at the
4 right number.
5 In your capacity analysis for factors that
6 influence it, do you look at things like aircraft
7 availability, instructor pilot shortages, delays of primary
8 student graduates as they come onto the base or whether
9 periodic runway maintenance -- are those kinds of things
10 included in the capacity?
11 MR. FINCH: What we look at when we're looking at
12 capacity are things that are inherent in the site itself as
13 opposed to, for example, number of students or instructors
14 available, which are really not inherent in the site but more
15 a matter, in that example, of personnel policy.
16 If you'd like, I can quickly read through a list of
17 the type of capacities that we considered.
18 COMMISSIONER COX: Okay.
19 MR. FINCH: First off is airfield operations, and,
20 basically, an airfield operation is one circuit around the
21 pattern, if you will, at an airfield.
22 COMMISSIONER COX: How do you get the number that

1 determines the aircraft -- airfield operations? Is it based
2 on some past number?
3 MR. FINCH: It's based on -- from the Joint Service
4 Group, this is based on a data call that we put out to the
5 services based on that.
6 Now, it turns out in that particular number that
7 the services, particularly between the Air Force and the
8 Navy, used slightly different assumptions in terms of how
9 many circuits they could make within a given time.
10 They have, under current practice, often different
11 roles in terms of spacing between flights and that sort of
12 thing. So in that particular number, it was very important
13 that we have an apples-to-apples comparison across the
14 services.
15 So as a means of achieving this uniformity, what we
16 did in that particular case was to draft some rules used by
17 the FAA, which govern the rate at which aircraft can circle
18 through a pattern.
19 So in that particular case we, after receiving
20 information from the services and a great deal of discussion
21 decided that using this rule with respect that the FAA uses
22 that governs aircraft in the area of an airfield would be an

1 acceptable one.

2 COMMISSIONER COX: Right. But the FAA, when they

3 look at that, use past history, in other words, not just a

4 number that says on a beautiful day you could have 55 flights

5 per hour or something.

6 MR. FINCH: At some point I will have to defer to

7 the real experts, but part of it is clearly safety of flight

8 that you want some special --

9 COMMISSIONER COX: Right. I guess what I'm getting

10 to is if we've gone back and said how many operations did you

11 have at this particular facility and that was the number that

12 became the capacity because that's what they've handled,

13 didn't that include, wouldn't that include different things

14 at different airports?

15 MR. FINCH: In the methodology we used, we tried to

16 not make it, you know, idiosyncratic but make it as a general

17 methodology, for example, in airfield operations just to

18 ensure that each of the sites concerned would be measured

19 equally.

20 And as I mentioned, in that particular example, we

21 used the FAA rules that govern how you conduct airfield

22 operations.

Document Separator

FAX

Date 04 May 1995

Number of pages including cover sheet 1

TO: MR. CHARLES NEMFAKOS

Executive Director, BSAT

Phone 703-681-0450

Fax Phone 703-756-2174

FROM: Alex Yellin

Review and Analysis-Navy Team

Defense Base Closure and Realignment Commission

1700 N. Moore St., Suite 1425

Arlington, VA 22209

Phone 703-696-0504

Fax Phone 703-696-0550

CC:

REMARKS: ☒ Urgent ☐ For your review ☐ Reply ASAP ☐ Please Comment

SUBJ: Consolidation/Collocation of Helicopter Undergraduate Pilot Training at Fort Rucker Al.

Mr. Nemfakos,

The Commission Staff has been tasked to look at Consolidation/Collocation of Helicopter Undergraduate Pilot Training at Fort Rucker Al. Please provide us with a COBRA and your analyses in each of these scenario's: Consolidation and Collocation. The assumptions are that NAS Whiting Field remains open, all other flight training associated with the T-34 continues to be executed at NAS Whiting, and the T-34 assets currently at NAS Corpus Christi are transferred to NAS Whiting. In this request, the only function considered to be moving is that of helicopter training, all other DoD recommendations for 1995 remain unchanged.

Please provide your analyses of these scenario's as soon as possible. This topic will be discussed at our 10 May hearing. If you or any member of your staff has any questions in this matter, please don't hesitate to call.

Document Separator

THE DEFENSE BASE CLOSURE AND REALIGNMENT COMMISSION

EXECUTIVE CORRESPONDENCE TRACKING SYSTEM (ECTS) # 950412-17

FROM: EVERETT, TERRY	TO: DIXON
TITLE: REP. (AL)	TITLE: CHAIRMAN
ORGANIZATION: U. S. CONGRESS	ORGANIZATION: DBCRC
INSTALLATION (s) DISCUSSED:	

OFFICE OF THE CHAIRMAN	FYI	ACTION	INIT	COMMISSION MEMBERS	FYI	ACTION	INIT
CHAIRMAN DIXON				COMMISSIONER CORNELLA	✓		
STAFF DIRECTOR	✓			COMMISSIONER COX	✓		
EXECUTIVE DIRECTOR	✓			COMMISSIONER DAVIS	✓		
GENERAL COUNSEL	✓			COMMISSIONER KLING	✓		
MILITARY EXECUTIVE				COMMISSIONER MONTOYA	✓		
				COMMISSIONER ROBLES	✓		
DIR. CONGRESSIONAL LIAISON		✓		COMMISSIONER STEELE	✓		
DIR. COMMUNICATIONS				REVIEW AND ANALYSIS			
				DIRECTOR OF R & A	✓		
EXECUTIVE SECRETARIAT				ARMY TEAM LEADER			
				NAVY TEAM LEADER			
DIRECTOR OF ADMINISTRATION				AIR FORCE TEAM LEADER			
CHIEF FINANCIAL OFFICER				INTERAGENCY TEAM LEADER	✓		
DIRECTOR OF TRAVEL				CROSS SERVICE TEAM LEADER		X	
DIR. INFORMATION SERVICES				MERRILL BEYER	✓		

TYPE OF ACTION REQUIRED

✓	Prepare Reply for Chairman's Signature		Prepare Reply for Commissioner's Signature
	Prepare Reply for Staff Director's Signature		Prepare Direct Response
X	ACTION: Offer Comments and/or Suggestions	✓	FYI

Subject/Remarks:

SUBMITTING QUESTION FOR APRIL 17 JOINT CROSS-SERVICE WORKING GROUP HEARING CONCERNING CONSOLIDATING PRIMARY HELICOPTER TRAINING BETWEEN THE ARMY AND NAVY.

Due Date: 950414	Routing Date: 950412	Date Originated: 950412	Mail Date:

Congress of the United States
Washington, DC 20515

April 12, 1995

Please refer to this number
when responding 950412-17

Honorable Alan J. Dixon
Chairman
Defense Base Closure & Realignment Commission
1700 North Moore Street
Suite 1425
Arlington, Virginia 22209

Dear Mr. Chairman:

As you prepare for your April 17th hearing on the Joint Cross-Service Working Groups' involvement in the Pentagon's base closure and realignment recommendations, we would be most appreciative if you would raise a number of issues with regard to the consolidation of undergraduate pilot training. Enclosed are a number of questions that you and the commissioners may want to put before the witnesses.

We applaud the addition of the joint cross-service working groups into the base closure process. They provided a new and important analysis that considered jointness and the consolidation of roles and missions. Unfortunately, in the case of undergraduate pilot training, the Pentagon acted on only half of the mission. While they agreed that introductory fixed wing training operations could be consolidated between the Air Force and the Navy, the Pentagon chose not to act on the recommendation to consolidate primary helicopter training between the Navy and the Army. We believe that this is a grave mistake, and a missed opportunity to provide the American taxpayer with significant cost savings.

Mr. Chairman, we can no longer afford unnecessary duplications in the military when more efficient and equally effective training arrangements are available. The consolidation of primary helicopter training is long overdue, and we hope that you and the other commissioners will consider this opportunity during your deliberations of the 1995 base closure process.

With best regards, we are

Sincerely yours,

Terry Everett
TERRY EVERETT, MC

Richard Shelby
RICHARD SHELBY, USS

Howell Heflin
HOWELL HEFLIN, USS

Proposed Questions

BRAC 95 HEARING ON JOINT CROSS-SERVICE RECOMMENDATIONS

UNDERGRADUATE PILOT TRAINING

17 APRIL 1995

In November of 1994, the Joint Cross-Service Group on Undergraduate Pilot Training submitted three different alternatives for consideration by the military departments and Secretary Perry. According to documents submitted to the BRAC, each alternative reduced excess capacity while maintaining high military value. **Each of the three alternatives consistently recommended consolidating all military undergraduate helicopter pilot training at Fort Rucker.**

However, these recommendations were not adhered to in there entirety. Secretary Perry chose not to consolidate UHPT at Fort Rucker as recommended due to high MILCON costs associated with closing Whiting NAS. He then directed consolidating all Navy initial fixed wing training at Whiting NAS.

- Why is it that consolidation of UHPT at Rucker was not adopted?
- Since the Navy is moving all of its initial fixed wing training to Whiting NAS, wouldn't limited space be freed-up if UHPT was moved to Ft. Rucker?
- From an efficiency, doesn't it make sense to have all initial rotary wing training deducted at one location?

On March 30, 1993 General Colin Powell stated at the House Armed Services Committee Army Posture Hearing that, "I believe the proper place to do the centralization (of UHPT) and where it can be done very well is at Fort Rucker, Alabama". He went on to say, "I am committed to push this as hard as possible because there are real savings here and this is where we ought to find the savings."

The cost to transfer the UHPT operation at Whiting Field to Fort Rucker is less than $18 million dollars. In 1992 the DoD IG reported that relocation of UHPT to Fort Rucker would save at least $79 million dollars over 5 years.

- Is this savings estimate still valid today?

In a proposal to the Roles & Missions Commission, the Army has stated that by consolidating all primary DoD rotary wing training, integration and standardization among the services would be enhanced to truly support jointness. Each of the services would continue to provide advanced training for their own unique aspects of rotary wing aviation.

The Army has the capacity to train all of DoD's primary helicopter pilot requirements without any need for expansion or new construction.

- From an efficiency and interoperability standpoint, doesn't it make sense for all introductory helicopter pilot training to be conducted by the Army?

During the BRAC 95 Navy hearing earlier this year, General Mundy commented that in the 1970's the Army was training Marine helicopter pilots, and that this arrangement worked very well.

- Is there any reason why the Marine Corps couldn't return to this arrangement?

In 1992, the JCS report on Roles & Missions recommended consolidation of all primary helicopter training with the Army. A team led by the Navy was tasked by Secretary of Defense Aspin to review this recommendation. Their findings concluded that consolidation would need to be put on hold until primary training for both fixed wing and rotary wing could be evaluated together, the service and operating costs of the new TH-67 trainer had been determined, and that the decision would be made with the context of a base closure round.

- Each of these points has been satisfied, yet DoD only adopted the fixed wing portion of the Cross-Service Group recommendation. Why was rotary wing training ignored?

Earlier this year, the Navy testified before the BRAC 95 commission that the consolidation of Navy helicopter training with the Army was not feasible because it was a "people" issue, or a quality of life issue and that Navy Pilots fly in more extreme weather conditions at sea than the Army does. If that in fact is the case, why does the Pentagon continue to request Army helicopters and pilots to support naval missions?

A number of Army missions in support of Naval operations:

1983: Operation Urgent Fury
•• Shipboard operations involving the Army's 18th Airborne Corps; UH-60's, OH-58A/C's, AH-1's

1987: Operation Prime Chance
•• Shipboard and overwater operations involving the Army's 4/17th CAV (now 4/2) with OH-58D's
•• valid CONOPS mission today

1994: Operation Uphold Democracy - Haiti
•• 10th Mountain Division operated from the USS Eisenhower
•• OH-58D's had extensive missions prior to invasion
•• UH-60's, CH-47's, OH-58A/C's and AH-1's transported troops and equipment to the AO for several days, followed by command & control missions

Each Army Aviation unit has a task for shipboard operations incorporated in their mission essential list of tasks. The Army trains for shipboard operations and performs shipboard operations.

In 1992, MGen. Dave Robbins, then-Commander of the Army Aviation Center, noted that one of the main reasons the Navy was opposed to consolidating this training with the Army was because the Navy used initial fixed-wing training as a "cutting" tool for students.

- Do you believe this to be the case, and is there any legitimate reason why the Navy needs this extra "cutting" tool?

- Could the Navy use the Army's training syllabus that places student pilots directly into the rotary wing pipeline?

According to the DoD IG, "Relocating the Navy's primary helicopter training to Fort Rucker would relieve ground and air traffic congestion at Whiting Field NAS."

- Is there a problem with congestion at Whiting Field, both in the air and on the ground? If so, would relocation of the Navy's Undergraduate Helicopter Pilot Training program free up space at Whiting Field?

- How does Fort Rucker compare with Whiting with regard to available space?

- Since the Army already owns nearly 80% of all DoD helicopters, does Fort Rucker have the capacity to train all of DoD's primary helicopter pilot requirements?

CONSOLIDATION
of
UNDERGRADUATE HELICOPTER PILOT TRAINING
at
FORT RUCKER

To make the most of each defense dollar we need to work more efficiently by eliminating redundancies within DoD. This will involve closing bases as well as consolidating training operations, all while maintaining a strong military peacetime readiness with the capability to meet national security contingencies.

Fort Rucker is the "home" to Helicopter or Rotary Winged aircraft pilot training for all U.S. Military Services and allies except the U.S. Navy and the Coast Guard. Consolidation would mean that all services would be taught in a basic core curriculum followed by service unique tracks. This would standardize DoD operations across the fleet, while establishing jointness and produce long-term infrastructure savings and interoperability. The Navy however, has resisted consolidating Undergraduate Helicopter Pilot Training (UHPT) for more than 20 years. Their argument against consolidation is fraught with inconsistencies. The Army Aviation leadership understands the requirements of interservice missions having supported naval operations from ships in the Persian Gulf and more recently shipboard operations off Haiti.

Consolidation of primary helicopter training is long overdue. The army aviation center at Fort Rucker, Alabama has proven to be an ideal place to train rotary wing pilots from all the services and can easily absorb the expanded mission.

•• On November 23, 1994, by direction of the Deputy Secretary of Defense, the Joint Cross-Service Group on Undergraduate Pilot Training submitted three different alternatives for consideration by the military departments and Secretary Perry. Each alternative reduced excess capacity while maintaining high military value. **Each alternative recommended consolidating all military undergraduate helicopter pilot training at Fort Rucker.**

•• On March 30, 1993 General Colin Powell stated at the House Armed Services Committee Army Posture Hearing that, "I believe the proper place to do the centralization (of UHPT) and where it can be done very well is at Fort Rucker, Alabama". He went on to say, "I am committed to push this as hard as possible because there are real savings here and this is where we ought to find the savings."

•• Relocation of the Navy's UHPT program would free up space at Whiting field that could facilitate the potential closure or realignment of that naval aviation training base in the future.

•• The cost to close the UHPT operation at Whiting Field is less than $18 million dollars. The DoD IG reported the relocation of UHPT to Fort Rucker will save at least $79 million dollars over 5 years.

•• According to the DoD IG, "Relocating the Navy's primary helicopter training to Fort Rucker would relieve ground and air traffic congestion at Whiting Field NAS, and eliminate inefficiencies associated with maintaining separate Army and Navy facilities."

•• The Army owns 79% of all DoD helicopters and does 85% of all DoD rotary wing acquisitions. The Army is recognized as the World Leader in helicopter pilot training.

•• The Army's decision to buy Bell Rangers (TH-67 Creek) as its new training helicopter means all services use virtually the same helicopter trainer.

•• At the March 1995 BRAC hearing on Navy issues, General Carl Mundy said, "pilot training worked well for the Marine Corps when the Army was training our pilots in the 1970's."

•• The 1992 Joint Chiefs of Staff report to Congress on Roles and Missions recommended the consolidation of all UHPT at Fort Rucker.

•• Since 1970, nine studies by the Pentagon and the GAO have shown the consolidation of Navy UHPT from Whiting Field, Florida to Fort Rucker, Alabama would save money.

THE DEFENSE BASE CLOSURE AND REALIGNMENT COMMISSION
1700 NORTH MOORE STREET SUITE 1425
ARLINGTON, VA 22209
703-696-0504

Please refer to this number when responding: 95C412-1

ALAN J. DIXON, CHAIRMAN

COMMISSIONERS:
AL CORNELLA
REBECCA COX
GEN J. B. DAVIS, USAF (RET)
S. LEE KLING
RADM BENJAMIN F. MONTOYA, USN (RET)
MG JOSUE ROBLES, JR., USA (RET)
WENDI LOUISE STEELE

April 17, 1995

The Honorable Richard Shelby
United States Senate
Washington, D.C. 20510

Dear Senator Shelby:

Thank you for forwarding questions concerning the Defense Department Joint Cross Service Group's work on Undergraduate Pilot Training (UPT) issues. I certainly understand your interest in the base closure and realignment process and welcome your comments.

As you know, the Commission held a hearing on April 17, 1995 on Joint Cross Service Group issues, which included UPT. The questions you brought to the attention of the Commission were submitted for the record at that hearing. As soon as we receive a response to the questions, we will forward them to you.

I look forward to working with you during this difficult and challenging process. Please do not hesitate to contact me whenever you believe I can be of service.

Sincerely,

Alan J. Dixon
Chairman

AJD:js

THE DEFENSE BASE CLOSURE AND REALIGNMENT COMMISSION
1700 NORTH MOORE STREET SUITE 1425
ARLINGTON, VA 22209
703-696-0504

Please refer to this number when responding: 950412-1721

ALAN J. DIXON, CHAIRMAN

COMMISSIONERS:
AL CORNELLA
REBECCA COX
GEN J. B. DAVIS, USAF (RET)
S. LEE KLING
RADM BENJAMIN F. MONTOYA, USN (RET)
MG JOSUE ROBLES, JR., USA (RET)
WENDI LOUISE STEELE

April 17, 1995

The Honorable Howell Heflin
United States Senate
Washington, D.C. 20510

Dear Senator Heflin:

Thank you for forwarding questions concerning the Defense Department Joint Cross Service Group's work on Undergraduate Pilot Training (UPT) issues. I certainly understand your interest in the base closure and realignment process and welcome your comments.

As you know, the Commission held a hearing on April 17, 1995 on Joint Cross Service Group issues, which included UPT. The questions you brought to the attention of the Commission were submitted for the record at that hearing. As soon as we receive a response to the questions, we will forward them to you.

I look forward to working with you during this difficult and challenging process. Please do not hesitate to contact me whenever you believe I can be of service.

Sincerely,

Alan J. Dixon
Chairman

AJD:js

Document Separator

JIM

facsimile
TRANSMITTAL

to: Addressee

fax #: —

re: Halo issue - Jt Rucker

date: 26 APR

pages: 3

I thought you might like to read about the latest shot fired in our/your direction.

From the desk of...

Jimmie Taylor
Vice President of Armed Services
Pensacola Area Chamber of Commerce
117 West Garden Street, Post Office Box 550
Pensacola, FL 32593-0550

tel: (904) 438-4081
fax: (904) 438-6369

Post-It™ brand fax transmittal memo 7671 | # of pages ▸

To ALEX YELLIAD	From
Co. BMAC	Co.
Dept.	Phone #
Fax # (703) 696-0550	Fax #

No difference

The Issue:

Closing commission considers helicopter training consolidation

Our Viewpoint:

Consolidation makes financial and military sense

A NAVY OFFICIAL claims there is a "fundamental difference" between Army and Navy basic helicopter training.

Granted, Navy pilots navigate over water and land on ships in rough seas far more often. But the basics of learning to fly are essentially the same in any branch of the military.

And, we are talking about basic training, not the advanced training occurring at sites in the United States and abroad.

Navy brass contend consolidation at Fort Rucker is impossible because of the differences. We don't see their point.

Basic training for pilots of all military helicopter models should be consolidated at the Army base. Studies estimate $100 million will be saved over five years.

With the federal government running an annual deficit of more than $200 billion, every possible way to save money should be pursued as long as it doesn't compromise national security.

It's good to know members of our congressional delegation — including Rep. Terry Everett, Sen. Howell Heflin and Sen. Richard Shelby — are pursuing this matter that will benefit the Pentagon and our region of Alabama.

The vice chairman of the Navy Base Structure Evaluation Committee had a hard time convincing base closing commissioners last week the variations in training amount to much.

He said transferring Navy, Marine Corps and Coast Guard training from Whiting Field in the Florida Panhandle would cost $150 million or more.

But a joint service study says closing the naval air station in the Florida Panhandle and moving its basic training function to Fort Rucker would be cost-effective.

We don't fault the Navy for trying to protect one of its bases, but in these days of federal cuts consolidation makes financial and military sense.

The study, included in a General Accounting Office report, says consolidating basic training would eliminate excess capacity and save money.

Disclosure of the study sparked the interest of the Base Realignment and Closure Commission, which is in the process of evaluating recommendations for downsizing or closing bases.

Navy brass rejected the joint service study when they drew up the base closing list submitted to the commission, choosing to study the possibility of sharing, instead of consolidating, training sites at Fort Rucker.

That study showed transferring at least part of the training operations would cost $150 million. Figures may have been inflated in a Navy effort to keep Whiting Field off the closure list.

We hope the commission recommends consolidation at Fort Rucker. The proposal has been kicked around for more than 20 years, but has been blocked by the Navy at every turn.

The consolidation debate is primarily a dispute between military branches. The Pensacola area will suffer if the jobs at Whiting Field are eliminated, but larger issues are at stake.

The base closing commission will send its recommendations to President Clinton by July 1. This consolidation proposal is consistent with the goals of the commission and the government it serves.

It should be done.

DOTHAN EAGLE

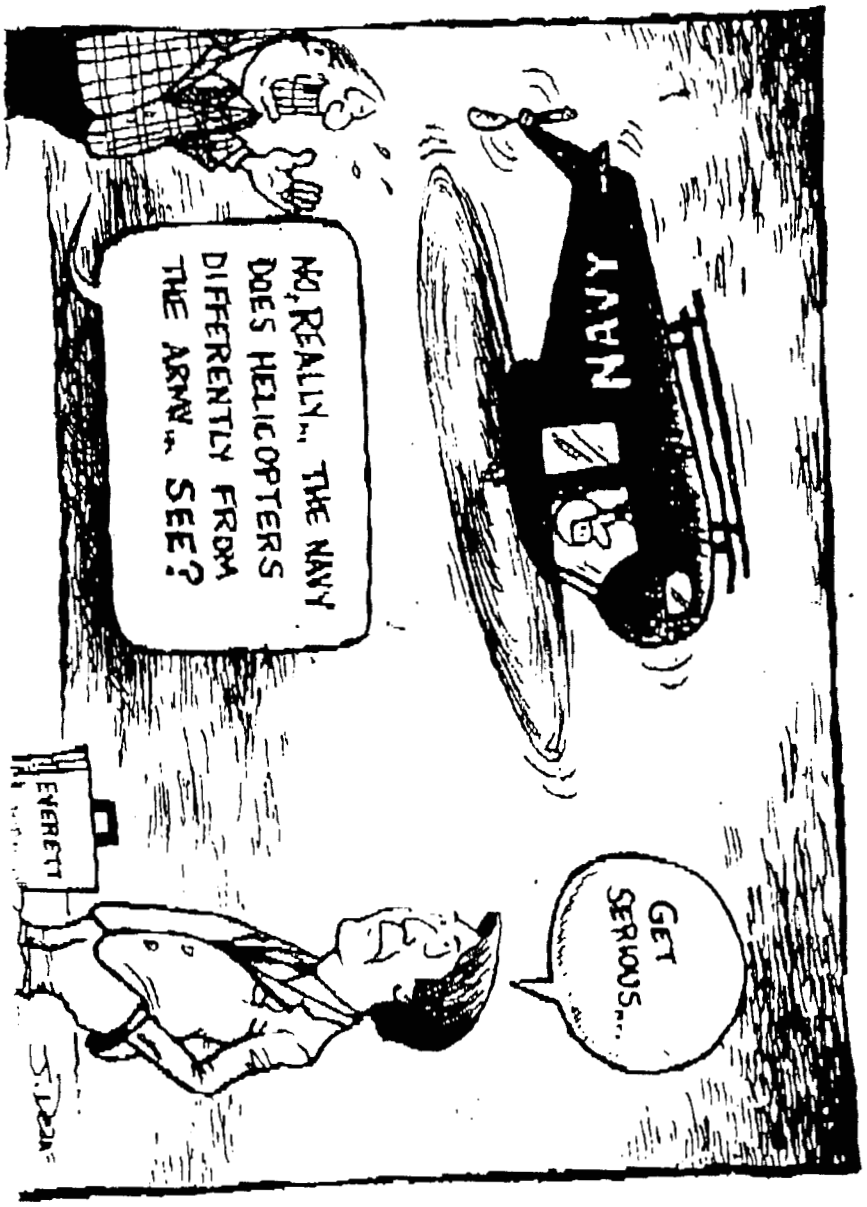

DOTHAN EAGLE
26 APR

Document Separator

UNDERGRADUATE PILOT TRAINING

ITEMS FOR INCLUSION IN THE RECORD

1. Mr. Finch, during your testimony, you stated to Commissioner Robles that you would provide a list of those criteria used by the UPT-Joint Cross-Service Group to constrain the linear programming model from presenting nonsensical results. Please provide these criteria.

ANSWER: In addition to the "Site/Function Constraint Matrix" which limited potential site/functions combinations from the outset of the modeling process, constraints were imposed as the JCSG proceeded with its Optimization Model process. These constraints which were applied in an additive manner are as follows:

1. Flight screening would not be performed/collocated with any other function - based on JCSG military judgment.
2. Primary and advanced NAV/NFO, advanced NFO Strike, and advanced NFO Panel functions would be joint and single-sited - based on DEPSECDEF memo of October 24, 1994.
3. No function would be "spread" or fractionalized smaller than a "notionalized" or smallest squadron (approximately 100 annual production) - JCSG military judgment.
4. Flight screening function limited to the Air Force Academy and Hondo, TX sites - JCSG military judgment.
5. Primary function limited to four sites - JCSG military judgment. (This constraint was later dropped.)
6. Three site closure results (MIN PRIME model run) used as baseline for follow-on Optimization Model runs.
7. Air space and outlying airfield operations capacity from sites closed in MIN PRIME model run were transferred to remaining sites in close proximity for all additional modeling efforts.

2. Mr. Finch, during your testimony, you stated to Commissioner Cornella that Flight Screening was "basically" included as a matter of completeness. For the record, please respond to the following question:

Why did you include Flight Screening, a function not now nor envisioned to be done at UPT bases, but did not include Introduction to Fighter Fundamental (IFF) training, a function that is done at UPT bases, in the scope of your analysis?

ANSWER: The JCSG defined its category scope to include: DoD flight programs which support and facilitate selection and training of pilots, naval flight officers, and navigators to the point of awarding "Wings." Post-"Wings" flying missions such a IFF, the Blue Angels, and a large number of graduate rotary-wing courses were excluded from direct analysis. Non-flying missions at the bases (such as technical training at Sheppard AFB and NAS Meridian) were also excluded. When forwarding alternatives for consideration, the JCSG asked the military departments to quantify any such missions that impacted their capacity.

3. General Blume/Mr. Nemfakos/General Shane, during your testimony, Commissioner Davis asked how much surge capacity exists in each service. Please respond to this question in terms of capacity to recover from temporary situations, such as a period of prolonged bad weather, and also in terms of capacity to accommodate an increase in the Pilot Training Rate in the event of a long-term increase in pilot requirements.

ANSWER: Maj Gen Blume. If Reese AFB closes as recommended by DoD, the Air Force will retain approximately 12 percent surge capacity to recover from temporary situations at the Specialized Undergraduate Pilot Training bases. In addition, bases will have the capability to respond to temporary requirements by lengthening the duty day, increasing sortie density, flying on the weekend, etc. Increases such as these are not sustainable over a sufficient period of time to generate net increases in production. For extended operations such as an increase in the pilot training rate, the Air Force will retain between 7 and 12 percent surge capacity.

Mr. Nemfakos. To ensure the DON has capacity to support future unforeseen increases in pilot/NFO training rates, as part of its configuration analysis the BSEC looked at scenarios where all the FY 2001 pilot and NFO training rates were increased by 10 and 20 percent. (This includes increases in the Air Force training scheduled for Naval air stations.) The results showed that even with the its closure recommendations, the DON could support a 20 percent increase in PTR requirements and still have some excess capacity.

In addition, the capacity analysis was based on a 237-day work year and accounted for down time due to bad weather. If need be, training capacity could be increased at each air station by increasing the operating schedule (e.g., pilots could train on weekends to make up for lost flying time during the week days).

4. General Blume/Mr. Nemfakos/General Shane, during your testimony, Commissioner Robles requested that each Service provide data summarizing the costs to train pilots. Please include in this information the fixed costs for Base Operating Support (BOS), Real Property Management Account (RPMA), Overhead and Personnel at each UPT base, and the variable costs which vary by the number of students and flight hours/sorties flown. These costs should reflect only the portion attributable to UPT for the installations that also host other tenant units.

ANSWER: Maj Gen Blume.

COST ESTIMATE BASED ON FY94 DATA

	Mission Fixed Costs (in $M)	RPM Fixed Costs (in $M)	BOS Fixed Costs (in $M)	Medical* Fixed Costs (in $M)	Total Fixed Costs (in $M)	SUPT Variable Cost Per Graduate
Columbus	$33.5	$4.9	$27.9	$8.5	$74.8	$237,507
Laughlin	$35.3	$5.7	$32.2	$11.0	$84.2	$245,039
Reese	$32.1	$5.5	$31.0	$9.9	$78.5	$244,619

Vance	$33.8	$5.7	$25.4	$4.9	$69.8	$232,394

* Although not specifically asked for, medical fixed costs are also provided. These costs are not included in any other of the fixed costs provided.

Definitions:

Mission Fixed Costs: Open-the-door costs to enter one student. Includes Instructors, school overhead, and maintenance.

RPM Fixed Costs: The upkeep on the facilities that is required whether or not you have students in training (e.g., utilities).

BOS Fixed Costs: Base operating support costs that are required to support the fixed personnel (e.g., transportation, supply, grounds maintenance, chaplains, comptroller).

Medical Fixed Costs: Open-the-door costs to enter one student (e.g., supplies, and equipment to support fixed population).

Variable Cost Per Graduate: The cost of sending one additional student through SUPT. It does not include any fixed costs.

Mr. Nemfakos. The Navy has issued a data call to collect these data. We will forward a response as soon as possible.

5. Mr. Finch, during your testimony, you stated that in order to achieve uniformity when making comparisons between the services, the UPT-Joint Cross-Service Group drafted rules used by the FAA to measure airfield operations capacity at each UPT base. Please provide the formula that the FAA uses and how these rules were applied by your group.

ANSWER: In collecting runway capacity data, the JCSG data call asked for the sustainable capacity of the air station's main field and each outlying field in terms of the number of flight operations per hour each runway complex can support. To ensure consistency in the responses, the question instructed the air stations to base their capacity calculations on the methodology in the FAA Advisory Circular 150/5060-5 entitled "Airport Capacity and Delay." This methodology accounts for the type and mix of aircraft, the runway and taxiway configurations, and reductions in operations due to weather and times the airfield is closed to flying operations for other reasons. The attached pages at **TAB 5** excerpted from the Circular describe the procedure for determining the weighted hourly capacity for each runway.

6. General Blume, during your testimony, you stated you would provide answers to several questions relating to weather. Please respond to the following questions:

ANSWER: These questions pertain to Joint Cross-Service Group analysis and data and should therefore be directed to the Joint Cross-Service Group.

Why was the percent of time at which the ceiling and visibility are better than 1000 feet and 3 miles given any weight in the analysis when it is 1500 feet and 3 miles that represents a key weather decision factor in conducting Air Force flight training operations?

Mr. Finch: The measures and criterion reflected the JCSG developed consensus decision. The 1000/3 ceiling visibility cutoff represents a key Navy decision factor. Missions were analyzed based on the users. For example, both Military Departments will conduct primary training, so both 1000/3 and 1500/3 were used. In Air Force unique bomber-fighter training, on the other hand, 1500/3 was used while 1000/3 was not.

In tracking weather attrition, factors such as actual attrition experience, cancellations due to forecast icing conditions, and the occurrence of crosswinds out of limits can be used. Why was so much weight placed on crosswinds rather than some of these other factors in the UPT-Joint Cross-Service Group functional value analysis?

Mr. Finch: All weather factors (icing, crosswinds, etc.) were captured by weather attrition inputs. The extra weight given to crosswinds represents a measurement of the frequency of crosswinds, not a measure of "lost sorties." While some crosswind exposure is useful, frequent crosswinds complicate the learning process and can cause last-minute scheduling changes.

The T-38 attrition rate planning factor at Reese is 28 percent compared to 17 percent for the T-1. Since the T-1 factor is currently in use at Reese, why did the UPT-Joint Cross-Service Group use the T-38 instead of the T-1 planning factor in its functional value analysis?

Mr. Finch: In computing the T-1 attrition planning factors, the JCSG used the reported value for Reese AFB and a surrogate, based on existing aircraft, for the other sites. In the final analysis, no Air Force site received points for the T-1 planning factor in the JCSG model. Based on T-37/T-38 attrition planning factor comparisons across sites, there is no reason to believe that Reese AFB would gain an advantage from a T-1 planning factor comparison.

7. Mr. Nemfakos, during your testimony, you stated to Commissioner Davis that you would provide for the record your analysis on Strike Pilot Training Rates. Please provide that general data along with your response to the following specific questions:

Are the flight operations per strike Pilot Training Rate (PTR) at NAS Meridian and NAS Kingsville used in your capacity analysis the same? Please explain any differences.

ANSWER: Yes, the analysis used 1511 daylight flight operations per Strike PTR

What is the current operations per strike Pilot Training Rate at NAS Kingsville? How does this compare with the figure used to determine strike Pilot Training Rate capacity at NAS Kingsville?

ANSWER: NAS Kingsville's data call reported a daylight flight operations requirement for an all T-45 syllabus of 1393 ops. The 1511 ops used in the analysis was derived as follows. Because in FY 2001 not all strike training will be done in T-45 aircraft, we assumed 50 percent of the Strike pilots would go through an all T-45 syllabus and 50 percent would go through a split syllabus consisting of an Intermediate phase in the T-2 aircraft and an Advanced phase in the T-45 aircraft. Based on certified data, the flight ops requirement for this split syllabus was calculated as follows:

Intermediate Phase in T-2 -- 741 (from NAS Meridian' data call)
Advanced Phase in T-45 -- 888 (from NAS Kingsville's data call)
Total: 1,629

Taking a weighted average, this gives

(1393 x .5) + (1629 x .5) = 1511 daylight flight ops per Strike PTR

To what extent was the Navy's determination that a single intermediate/advanced strike UPT base containing sufficient capacity to conduct training to support the strike Pilot Training Rate (PTR) in the future and under surge operations based upon the availability of NAS Corpus Christi as an outlying field?

ANSWER: Under the recommended scenario, the main airfield at NAS Corpus Christi is needed to support the single-siting of Strike training at NAS Kingsville.

What is the maximum strike Pilot Training Rate (PTR) that NAS Kingsville could support with Orange Grove and NAS Corpus Christi available as outlying fields?

ANSWER: Because daylight runway operations is the capacity limiter at training air station, we will show the capacity of this complex to support Strike training in these terms. As explained in response question 6b, the certified data showed that the daylight runway operations per pilot training rate (PTR) for Strike training is 1511 operations. The capacity at NAS Kingsville, OLF Orange Grove, and NAS Corpus Christi (after the proposed runway extensions) is as follows:

NAS Kingsville ------- 237 days x 12.1 hrs/day x 80 ops/hr = 229,416 annual flight ops
OLF Orange Grove -- 237 days x 11.6 hrs/day x 54 ops/hr =148,457 annual flight ops
NAS Corpus Christi -- 237 days x 11.6 hrs/day x 80 ops/hr = 219,936 annual flight ops
Total: 597,806 annual flight ops

Dividing the total annual flight ops by the flight ops required per PTR gives a strike PTR capacity of

597,806/1511 = 396 PTR

The FY 2001 pilot training rate for Strike is 336 pilots. Thus, the recommended scenario provides an excess capacity of

396 - 336 = 60 PTR

which equates to about an 18% surge capability under planned and budgeted operations. Note that the Strike training capacity at this complex will increase as the Navy completes its transition to an all T-45 training syllabus. Once this transition is completed, the capacity at this complex will be

597,806/1393 = 427 PTR

which increases the surge capability to about 28%

To what extent would the strike training capacity of NAS Kingsville be impacted if NAS Corpus Christi was not available?

ANSWER: Without the use of NAS Corpus Christi, NAS Kingsville would need another outlying field to support all Strike training.

8. Mr. Finch, your optimization analysis apparently placed primary emphasis on the installation military value data provided to you by the services, and less emphasis on the functional values developed by the UPT-Joint Cross-Service Group.

Please explain the reasoning for this approach?

ANSWER: Sites have value both with respect to their ability to accommodate activities involving specific functions (e.g., those associated with flight training) and the more general military missions of the Military Departments. For the former, the initial means of representing value for flight training functions was to consider the capacity of sites collectively to carry out all the functions associated with flight training. This was done by introducing a set of constraints that ensured that there was sufficient capacity in the collection of sites that remained open to handle all flight training functions.

Beyond ensuring there was sufficient capacity to perform flight training functions, the Group's methods next considered military value, maximizing the inherent military value of all sites that remained open to carry out general military missions of the Military Departments.

Finally, the Group's method considered the value of sites that remained open to perform flight training functions. Since functional value was already considered implicitly by setting constraints that guaranteed sufficient capacity to carry out all functions, this additional consideration of functional value was given lower priority.

To allow functional value to drive the model is relevant only if we assume functions can be easily moved and are completely interoperable. In practice, this led to nonsensical results during the early, "unconstrained" model runs. For example, Navy Strike training with its attendant costly T-45 infrastructure was spread to four sites. Other functions were swapped between Air Force and Navy sites. Site functional value was also a more narrow look at

installation value, as it did not consider collateral missions such as technical training. The Military Departments' inputs encompassed all functions and potential alternative uses of the installation.

9. Mr. Finch, your Joint Cross-Service Group minutes of March 24, 1994, state that the UPT category is largely installation oriented. If the value of a UPT base is best reflected in its functional rather than military value, why didn't you base your alternatives on model output which maximized functional value unconstrained by installation military value?

Since there is a direct correlation between the Joint Cross-Service Group's functional value rating and the Air Force's determination of military value, didn't the use of both functional and military value in the model simply increase the impact of functional value in the result?

ANSWER: Functional and military values are not independent. SECDEF guidelines define the first four BRAC criteria as military value. Criterion one is "mission requirements." This indicates functional value is a significant element of military value. There is also no single functional value for each base. The JCSG generally analyzed each site for all UPT missions, regardless of whether the site currently supported those missions. The JCSG did not analyze non-UPT missions. Functional value is only a subset of military value.

10. General Blume, since the Air Force relied so heavily on the results of the Joint Cross-Service Group's computer model, did you analyze the model for calculation errors?

ANSWER: The Air Force had representatives on the Joint Cross-Service Group and its Study Team to continuously monitor the process and its output. The Base Closure Executive Group also did an independent capacity analysis to confirm the required infrastructure level.

11. General Blume/Mr. Nemfakos, your Service recommendations used your own BRAC process as well as non-BRAC policy decisions to choose which UPT bases to close or realign. Why didn't your recommendations necessarily reflect the high functional value scores from the UPT-Joint Cross-Service Group?

ANSWER: Maj Gen Blume. The Air Force recommendations do reflect the high functional value scores. The recommendation to close Reese AFB is consistent with the fact Reese had the lowest average functional value.

Mr. Nemfakos: The DON's process did not consider functional value. It used its own documented method for evaluating the military value of its installations.

12. Gen Blume, the average functional value for each Air Force UPT base is shown (the Reese score is adjusted based on your recent memo to us).

Columbus AFB	6.74
Vance AFB	6.67
Randolph AFB	6.53

Laughlin AFB	6.50
Reese AFB	6.22

The Air Force Base Closure Executive Group (BCEG) apparently used the functional values from the UPT-Joint Cross-Service Group. These averages were used to find military value by performing a standard deviation analysis to assign a color "Stop Light" code to Criteria I, "Flying Mission Evaluation." All eight criteria were then considered to derive an overall Air Force ranking: the result was Tier I for Columbus, Laughlin, Randolph, and Vance, and Tier III for Reese.

Why didn't the Air Force simply use the functional value for the training that is actually accomplished at each specific UPT base to determine its score? Would the result have been different?

ANSWER: Functional value is an important part of military value, but is not necessarily the only indicator. For example, Randolph AFB houses a Major Command Headquarters, a Numbered Air Force Headquarters, and the Air Force Military Personnel Center besides having a flying mission. In the case of UPT bases, average functional value scores, the BCEG "Stop Light" analysis, and professional judgment all indicated Reese AFB is the correct base to close. The Air Force does not believe the results would have been different if functional value were used as an exclusive measure. However, using only functional value would be a narrow analysis and would not comply with Secretary of Defense guidelines. In addition, the Air Force made a conscious effort to fully integrate, where possible, the Joint Group process into its entire 1995 BRAC analysis. For the Laboratory, Test and Evaluation, and Depot subcategories, the Air Force used Joint Group data, the same methodology and, with few exceptions, the same measures of merit to produce the functional portion of the Criterion I grade for those installations. For the Undergraduate Flying Training category, the Air Force used the Joint Group functional values as the basis for its Criterion I grade. These steps ensured that the Air Force analysis was consistent, to the maximum extent possible, with the Joint Group direction on analysis of these functions.

It should be noted that the average functional values were not used to find "military value," but were instead used to determine the Criterion I grade. Military value, under the criteria, consists of the first four criteria.

Finally, the BCEG examined the functional values derived by JCSG-UPT. After discussion, the BCEG agreed to include all activities pertaining to Air Force operations as the basis for the average functional value. Including all potential flying training activities rather than the training actually accomplished provides a better analysis of both current and potential training value.

13. Mr. Finch, did the UPT-Joint Cross-Service Group run any excursions using the Linear Programming Optimization Model, such as the ones shown on below:

a. Examining only Air Force Bases
b. Examining only Naval Air Stations

c. Excluding flight screening
d. Excluding Navy-unique functional areas
e. Excluding Air Force-unique functional areas
f. Changing the weights on various factors, such as airspace.

ANSWER: The Group was sensitive to the potential issue of adjusting the model after the data had been collected. Excursions to evaluate the sensitivity of the model to movement of new functions to new sites given differing minimum site levels was performed. Service specific excursions were not performed, given the joint perspective of the Group's efforts.

What would the results be if these excursions were run?

ANSWER: It would be inappropriate to speculate as to potential results without running the model.

14. Mr. Finch, what were the options you considered for measuring capacity, and why did you choose the methods you did?

ANSWER: Factors of capacity and the methods to measure them were developed over time by the JCSG. The process started with development of the Data Call followed by construction of the Capacity Analysis Matrix and the questions utilized in point distribution for the Measures of Merit. As the process evolved, the JCSG refined its methods of measurement in the framework of sound operational experience and military judgment.

15. Mr. Finch, a separate functional value for the Air Force's post-UPT Introduction to Fighter Fundaments (IFF) training was not included among the 10 functional areas selected for assessing the overall functional value of each UPT-category base.

Even though it is conducted after "Wings" are awarded, IFF is conducted at a UPT base, consumes capacity, and is similar in content to training events contained within the latter stages of the Navy's Strike Training syllabus.

Why didn't the UPT-Joint Cross-Service Group include IFF as an additional functional area?

ANSWER: Post-"Wing" flying missions such as IFF, the Blue Angels, and a large number of graduate rotary-wing courses were excluded from direct JCSG analysis. Non-flying missions collocated at the UPT sites (such a technical training a Sheppard AFB and NAS Meridian) were also excluded. When forwarding alternatives for consideration, the JCSG asked the military departments to quantify any such missions that impacted their capacity.

16. General Blume, did the Air Force consider transferring the Introduction to Fighter Fundamentals training from Columbus AFB to another location such as Luke AFB in order to increase the capacity to do other training at Columbus?

ANSWER: No. The Air Force collocated Introduction to Fighter Fundamentals (IFF) training on the UPT bases in 1993 when it stood up Air Education and Training Command during a major reorganization. This allowed a more seamless training continuum for fighter-bound students, particularly as the Air Force converted from generalized UPT to specialized UPT. Luke AFB also does not have the capacity to absorb this training. Even if Luke could absorb IFF, this would require an additional move for many fighter-bound students whose final formal training units were located elsewhere. To return to a different basing structure would be expensive and counterproductive.

17. Mr. Finch, in the consideration of training airspace for both capacity analysis and functional value, the UPT-Joint Cross-Service Group methodology permitted a base to claim credit for large sectors of airspace so long as any portion of it was within 100 nautical miles of the base. For bases near the Gulf of Mexico, this meant credit for huge over-water sectors.

Both Air Force and Navy UPT programs train predominantly over land. This is to permit such over-land flight training events as ground reference maneuvers and low-level navigation. Over-water training is performed close to shore. Since actual UPT practice precludes the use of large blocks of over-water airspace, doesn't giving credit for such over-water airspace unfairly skew the results in favor of coastal bases?

ANSWER: Over-water airspace has intrinsic value to the Navy and the consensus of the JCSG was to consider it equally with over-land airspace.

18. Mr. Finch, did either the Services or the UPT-Joint Cross-Service Group consider the impact of contracting some UPT functional training areas to outside sources?

ANSWER: No. The JCSG charter was to help size infrastructure, not to make policy decisions.

19. General Blume, does closing Reese AFB leave sufficient capacity in the UPT area to provide for surge capability in pilot training?

ANSWER: Yes. The closure of one Air Force UPT base leaves sufficient capacity to provide for surge capability. However, there is not enough excess capacity to close more than one Air Force UPT base.

20. Mr. Finch, all of your alternatives move the Navy's helicopter training to Fort Rucker. There are several different ways to implement this alternative. For example, the Navy could retain their current helicopter training process and be collocated at Fort Rucker as an Army tenant; or the Navy's pilots could be integrated into the Army training through a consolidation. Did the Joint Cross Service Group consider the issue of consolidation vs. collocation when developing its alternatives?

ANSWER: No. The JCSG was not established to consider policy issues related to undergraduate pilot training. Therefore, its approach was to use existing policies that were applicable to the various functions considered by the Group. In the case of helicopter training,

existing policy was, and is, not to consolidate such training for the Army and Navy. Therefore, only alternatives that involved collocating or not collocating this function were considered.

21. Mr. Finch, the Navy responded to your alternatives to close Whiting Field with COBRA analyses that showed a high cost of implementing the move of primary training to Naval Air Station Pensacola and helicopter training to Fort Rucker.

Did the UPT-Joint Cross Service Group look at variations to this scenario, such as the relocation of helicopter training to Fort Rucker with primary training remaining at Whiting Field?

ANSWER: Given the resource requirements, site capacities and functional values, and site military values, the Optimization Model consistently moved the helicopter function to Fort Rucker and closed NAS Whiting Field. The Group did not look at additional variations.

22. Mr. Nemfakos, would moving helicopter training out of Whiting Field help the Navy meet its requirement for outlying fields for primary training?

Does your answer change when considering the transition to any of the Joint Primary Aircraft Training System (JPATS) aircraft?

ANSWER: No, the OLFs used for helicopter training are not configured to support fixed-wing training. JPATS does not change this situation.

23. Mr. Nemfakos, the Navy Base Structure Evaluation Committee (BSEC) record states that the reason for rejecting the movement of helicopter training to Fort Rucker is the high one-time cost and long return on investment.

Did operational concerns also enter into this decision or was it strictly an economic decision?

ANSWER: The decision not to co-locate helicopter training at Fort Rucker was strictly an economic decision -- high one-time costs and a poor return on investment. Operational considerations, however, lead the DON to evaluate a co-location scenario as opposed to a consolidation scenario.

24. General Blume, please summarize the main reasons why the Base Closure Executive Group (BCEG) choose Reese AFB to close?

ANSWER: When all eight criteria were applied to the bases in the UFT category, Reese AFB ranked lowest relative to the other bases in the Undergraduate Flying Training category. In addition, Reese AFB was recommended for closure in each alternative recommended by the DoD Joint Cross-Service Group for UPT.

25. Mr. Nemfakos, please summarize the main reasons why the Base Structure Evaluation Committee (BSEC) chose NAS Meridian to close?

ANSWER: First, the current Force Structure Plan shows a continuing decline in the PTR (particularly in the decline from 11 to 10 carrier air wings) so that Navy strike training could be handled by a single full-strike training base. Second, the consolidation of strike training that follows the closure of NAS Meridian is in the spirit of the policy of the Secretary of Defense that functional pilot training be consolidated. The training conducted at NAS Meridian is similar to that conducted at NAS Kingsville, which has a higher military value, presently houses T-45 assets (the Department of the Navy's new primary strike training aircraft) and its supporting infrastructure, and has ready access to larger amounts of air space, including over-water air space if such is required. Lastly, the net of all costs and savings associated with this recommendation is a savings of $158.8 million. Annual recurring savings after implementation are $33.4 million with an immediate return on investment expected.

26. Mr. Finch, please discuss the process used to analyze a potential NAS Meridian/Columbus AFB complex.

What alternatives or "strawmen" did the UPT-Joint Cross-Service Group consider?

ANSWER: The Group evaluated three alternatives for the NAS Meridian/Columbus AFB complex: 1) A JPATS Primary "Master" site, 2) a Strike/Bomber-Fighter complex with Strike at NAS Meridian and Bomber-Fighter at Columbus AFB, and 3) moving Maritime and Primary/Intermediate NFO/NAV to NAS Meridian to allow creation of a JPATS Primary "Master" site at NAS Pensacola and NAS Whiting Field. The first alternative's up-front costs - building five outlying fields and relocating Columbus AFB's Bomber Fighter function to Laughlin AFB were considered excessive. The second alternative was dropped because it did not result in the net increase of a "base complex," would waste significant investment in the T-45 training system at NAS Kingsville, and it would also require high, up-front cost at NAS Meridian. The third alternative, while not as costly to implement as alternative one, was discounted as the Maritime and Primary/Intermediate NFO/NAV functions could be readily accommodated by those flight training bases not recommended for closure. (JCSG Meeting Minutes of February 23, 1995).

What COBRA runs were performed to assess a potential NAS Meridian/Columbus AFB complex?

ANSWER: None.

What cost advantages were considered (for example, NAS Meridian and Columbus AFB using joint targets and outlying fields and sharing excess capacity during runway maintenance)?

ANSWER: The JCSG considered potential savings in shared or combined facilities from a JPATS site consolidation or formation of a JPATS base complex, but found they could not readily be identified. The Group also agreed that savings, if any, would be well in the future. In

reviewing the base complex issue, the Group found no clear or compelling rationale to change the Military Departments' recommendations.

27. Mr. Nemfakos, if the redirect of mine warfare helicopter assets to NAS Corpus Christi is not approved, what impact would that have on the operations per day available for pilot training at Corpus Christi?

How much do other flight operations at Corpus Christi reduce daily operations available for pilot training?

ANSWER: Operating mine warfare helicopters out of NAS Corpus Christi would have a negligible effect on the runway operations available for pilot training. All other flight operations at NAS Corpus Christi, to include the proposed mine warfare helicopter operations, require less than 5 percent of NAS Corpus Christi's pilot training capacity.

28. Mr. Finch, will Joint Primary Aircraft Training System (JPATS) increase or decrease the number of bases required for UPT training?

ANSWER: The answer will depend on the aircraft selected and the evolution of the JPATS training syllabus. For example, some contenders may require longer runways than others. On the other hand, these same aircraft may be able to absorb some flying time from the more costly and more infrastructure-intensive advanced training tracks (i.e., T-45 Strike training).

29. Mr. Finch, what was the impact of Joint Primary Aircraft Training System (JPATS)-related issues on the group's assessment of functional value?

What specific facility and airspace requirements were used to determine Joint Primary Aircraft Training System (JPATS) functional values?

ANSWER: For purposes of the analyses, the Measures of Merit utilized the maximum requirements identified in the source selection process for JPATS (i.e., 5,000 ft runway).

CONGRESSIONAL QUESTIONS SUBMITTED FOR THE RECORD

UNDERGRADUATE PILOT TRAINING

Questions submitted by Congressman Smith:

1. Since the Navy has recommended relocating the Naval Air Technical Training Center (NATTC) from Lakehurst, NJ, to Pensacola, do you envision recreating the Carrier Aircraft Launch and Recovery System (COLASSES) at Pensacola or do you expect to disassemble, package, ship and reinstall those devices that are critical to training pilots for flying off and onto aircraft carriers?

ANSWER: The mission of NATTC Lakehurst Detachment does not include training pilots for flying off and onto aircraft carriers. The NATTC Lakehurst Detachment personnel and equipment support training requirements specific to operations and maintenance of aircraft carrier catapult, launch, and recovery equipment systems. The personnel and equipment necessary to continue supporting this training will be relocated to NAS Pensacola.

2. At what cost do you envision recreating the unique aircraft flight training facility in Pensacola?

ANSWER: NATTC Lakehurst Detachment is not a unique aircraft flight training facility and therefore will not be recreated as such. However, all appropriate costs to relocate NATTC Lakehurst Detachment necessary personnel and equipment that support training requirements specific to operations and maintenance of aircraft carrier catapult, launch, and recovery equipment systems were included in the COBRA analysis for Lakehurst. These costs are calculated automatically by COBRA algorithms from various input data and appear as part of the aggregate one-time costs for NAWC AC Lakehurst, NJ plus the one-time costs for NAS Pensacola, FL. The exact cost will be determined as part of the implementation planning and budgeting process; however, it would be expected that the final cost would be of a similar magnitude.

3. Do facilities exist at Pensacola for the housing of the Lakehurst NATTC students?

ANSWER: Yes. BRAC 93 moved average onboard of 5004 students to NAS Pensacola. BRAC 95 adds the relocation of aviation students from both NTTC Meridian and Lakehurst, a total of 162 additional students. Barracks space was sized under BRAC 93 to accommodate the planned force structure through the end of the century. The FY 2001 average onboard for aviation students, including Meridian and Lakehurst, is 4226. The Navy is under contract to build BEQ space for 4924 beds. This number includes planned onboard, transient students and a surge capability. In view of this, the BSEC made a determination that no additional BEQ construction was required.

4. What type of delay or disruptions are anticipated or planned for in the training of these aircraft carrier student pilots while the training facility is disassembled, moved and recreated in Pensacola?

ANSWER: NATTC Lakehurst Detachment does not train aircraft carrier student pilots.

Questions submitted by Senators Shelby and Heflin and Congressman Everett:

1. In November of 1994, the Joint Cross-Service Group on Undergraduate Pilot Training submitted three different alternatives for consideration by the military departments and Secretary Perry. According to documents submitted to the BRAC, each alternative reduced excess capacity while maintaining high military value. Each of the three alternatives consistently recommended consolidating all military undergraduate helicopter pilot training at Fort Rucker.

However, these recommendations were not adhered to in there entirety. Secretary Perry chose not to consolidate UHPT at Fort Rucker as recommended due to high MILCON costs associated with closing Whiting NAS. He then directed consolidating all Navy initial fixed-wing training at Whiting NAS.

a. Why is it that consolidation of UHPT at Ft. Rucker was not adopted?

ANSWER: Mr. Nemfakos. While the recommendations forwarded by the UPT Joint Cross-Service Group called for moving the DON's Advanced Helicopter training to Fort Rucker, they said nothing about consolidating UHPT. Because of operational differences in training Navy and Army helicopter pilots, in evaluating these proposals, the DON only considered the co-location of UHPT.

b. Since the Navy is moving all of its initial fixed-wing training to Whiting NAS, wouldn't limited space be freed-up if UHPT was moved to Ft. Rucker?

ANSWER: Mr. Nemfakos. Moving the DON's Advanced Helicopter training to Fort Rucker would free-up space at NAS Whiting Field for fixed-wing training. However, because there is no issue of limited space at NAS Whiting Field for fixed-wing training, this additional space would be of little value.

c. From an efficiency standpoint, doesn't it make sense to have all initial rotary-wing training dedicated at one location?

ANSWER: Mr. Nemfakos. It would make sense to have all initial rotary wing training at one location if both the Navy and Army had the same training syllabi, same trainers, and identical aircraft. They do not. The DON has unique training requirements which are driven by its operational missions (i.e., a sea-based environment). Because of this, a consolidation of UHPT training would still require separate training tracks for Navy and Army pilots, and therefore, only create costs.

2. On March 30, 1993 General Colin Powell stated at the House Armed Services Committee Army Posture Hearing that, "I believe the proper place to do the centralization (of UHPT) and where it can be done very well is at Fort Rucker, Alabama." He went on to say, "I am committed to push this as hard as possible because there are real savings here and this is where we ought to find the savings."

The cost to transfer the UHPT operation at Whiting Field to Fort Rucker is less than $18 million dollars. In 1992 the DoD IG reported that relocation of UHPT to Fort Rucker would save at least $79 million dollars over 5 years.

a. Is this savings estimate still valid today?

ANSWER: Mr. Nemfakos. It should be noted that the Assistant Secretary of Defense (Force Management and Personnel) and the Department of the Navy nonconcurred with the portion of the 1992 DoD IG audit report in which were presented the savings estimate cited above, believing that the audit analysis attempted to compare dissimilar programs and also questioning the estimated monetary benefits from relocation.

In considering the UPT JCSG alternatives during the 1995 base realignment and closure process, the BSEC used only data, certified to be accurate and complete, contained in our 1995 Base Structure Data Base, and information provided and verified by the other Military Departments. Based on our analysis of this certified data, the total estimated one-time cost to implement the "non-JPATS' alternative is $155.7 million with an annual recurring savings after implementation of $13 million and a return on investment expected in 14 years. The net present value of the costs and savings over 20 years for this scenario is a savings of $9 million. The total estimated one-time cost to implement the "JPATS' alternative is $159 million with an annual recurring savings after implementation of $13 million and a return on investment expected in 15 years. The net present value of the costs and savings over 20 years for this scenario is a savings of $7 million.

3. In a proposal to the Roles & Missions Commission, the Army has stated that by consolidating all primary DoD rotary-wing training, integration and standardization among the services would be enhanced to truly support jointness. Each of the services would continue to provide advanced training for their own unique aspects of rotary-wing aviation.

The Army has the capacity to train all of DoD's primary helicopter pilot requirements without any need for expansion or new construction.

a. From an efficiency and interoperability standpoint, doesn't it make sense for all introductory helicopter pilot training to be conducted by the Army?

ANSWER: Mr. Nemfakos. There is a fundamental difference in how the Army and the naval services desire to train their pilots from an operational perspective; each has its own set of validated requirements that drive its training program, the location for the training, and efficiencies derived. The Navy, Marine Corps, and Coast Guard training requirements include fixed-wing training for all students, emphasis on basic and radio instrument training, situational awareness/unusual attitude/aerobatic training and shipboard landing training. We use aircraft systems as well as simulators and ground support systems that are different from those used by the Army in support of this specialized training. Then too, we believe that the operational environment in which our helicopter pilots will eventually be required to fly validates and mandates our current approach to UHPT. For example, the absolute necessity for aviator competence in over water flight, where aircraft performance and navigational techniques employed differ significantly from those over land, carries unique training demands. And, especially for Marine helicopter pilots, replacement of the aging CH-46 fleet with V-22 aircraft that feature in-flight transitions between rotary and fixed-wing modes will spawn a completely different dynamic for which they must be trained. In contrast, Army requirements and training

are oriented toward the day/night VMC, ground contact environment that supports the Army mission in the field.

What makes the most sense for all the Services is to adhere to training programs that best prepare pilots to function in the respective operational environments in which they will be employed. Different requirements produce efficiencies unique to the specific training program at each base (NAS Whiting Field and Fort Rucker). It should be noted that intent of the Secretary of Defense in establishing a JCSG for UPT was not for it to examine the UPT programs of the Services with an eye toward consolidation, but to assist the Military Departments in identifying asset sharing opportunities. To what extent "jointness" is served by consolidation of UHPT, whether it should be, and which Service ought to conduct consolidated UHPT for all are issues more appropriately addressed outside the base realignment and closure process.

4. During the BRAC 95 Navy hearing earlier this year, General Mundy commented that in the 1970's the Army was training Marine helicopter pilots, and that this arrangement worked very well.

a. Is there any reason why the Marine Corps couldn't return to this arrangement?

ANSWER: Mr. Nemfakos. The Department of the Navy does not endorse Army UHPT for Marine pilots, because it does not meet the training requirements for service with the Fleet and Fleet Marine Forces. During the Vietnam War, the Marine Corps experienced a severe shortage of pilots, and following the direction of the Secretary of Defense, accepted helicopter pilots who had been trained by the Army. To meet Marine Corps requirements those Army-trained pilots, whose training was complete by Army requirements, required an additional 70 to 75 hours of flight training that was provided in Marine Corps helicopter training groups. General Mundy's comment during the Commission's hearing on March 6, 1995, did not indicate his willingness to change the training syllabus for Marine Corps helicopter pilots, but was offered in rebuttal to suggestions that our current resistance to UHPT consolidation is fueled in whole or in part by interservice rivalry.

5. In 1992, the JCS report on Roles & Missions recommended consolidation of all primary helicopter training with the Army. A team led by the Navy was tasked by Secretary of Defense Aspin to review this recommendation. Their findings concluded that consolidation would need to be put on hold until primary training for both fixed wing and rotary wing could be evaluated together, the service and operating costs of the new TH-67 trainer had been determined, and that the decision would be made with the context of a base closure round.

a. Each of these points has been satisfied, yet DoD only adopted the fixed-wing portion of the Cross-Service Group recommendation. Why was rotary-wing training ignored?

ANSWER: Mr. Nemfakos. The 1992 JCS Report on Roles & Missions, signed by General Colin Powell in February 1993, did not recommend consolidation of primary helicopter training. Instead, it stated *"If it is cost effective, Navy, Marine Corps and Coast Guard helicopter training will be moved from Pensacola to Ft Rucker."* A joint working group, led by the Navy with

assistance from the Army, recommended *"retaining existing Navy helicopter training at Whiting Field and continuing use of the T-34C for primary training and track selection at least through JPATS introduction. This proven training format is presently the least costly approach to producing Navy helicopter pilots that meet service requirements."* The study further recommended that *"All services reevaluate each of the options presented in this study shortly after the following events occur: JPATS source selection is complete and acquisition/operating costs are identified. Final force levels are established and this flight training requirements determined. Army receives TH-67 deliveries and actual inventory and operating costs are identified."* The study was forwarded with concurrence from the Army.

Rotary-wing training was considered on an equal basis with all other types of UPT in both the Department of the Navy's analysis and that conducted by the UPT JCSG. The rationale for the Department of the Navy's rejection of the UPT JCSG alternative to close NAS Whiting Field is explained in response to question 1.

6. Earlier this year, the Navy testified before the BRAC 95 commission that the consolidation of Navy helicopter training with the Army was not feasible because it was a "people" issue, or a quality of life issue and that Navy Pilots fly in more extreme weather conditions at sea than the Army does. If that in fact is the case, why does the Pentagon continue to request Army helicopters and pilots to support naval missions?

A number of Army missions in support of Naval operations:

<u>1983: Operation Urgent Fury</u>
*Shipboard operations involving the Army's 18th Airborne Corps: UH-60's, OH-58A/C's, AH-1's

<u>1987: Operation Prime Chance</u>
*Shipboard and overwater operations involving the Army's 4/17th CAV (now 4/2) with OH-58D's
*valid CONOPS mission today

<u>1994: Operation Uphold Democracy - Haiti</u>
*10th Mountain Division operated from the USS Eisenhower
*OH-58D's had extensive missions prior to invasion
*UH-60's, CH-47's, OH-58A/C's and AH-I's transported troops and equipment to the AO for several days, followed by command & control missions

Each Army Aviation unit has a task for shipboard operations incorporated in their mission essential list of tasks. The Army trains for shipboard operations and performs shipboard operations.

ANSWER: <u>Mr. Nemfakos.</u> As mentioned in response to question 1, training for Army helicopter pilots and naval aviators is designed to prepare them for two significantly different operational environments. The record of employment of Army helicopters shows that the Army

does operate from Navy ships on certain occasions and under visual meteorological (VMC) weather conditions. However, Army helicopter pilots are not trained for, and do not operate during, degraded weather conditions. In contrast, every Navy pilot is trained to operate from large and small deck ships under all weather conditions. In each of the cases cited above, Army helicopters were required due to unique mission circumstances and operated under favorable weather conditions as directed by senior Defense Department officials.

7. In 1992, MGen. Dave Robbins, then-Commander of the Army Aviation Center, noted that one of the main reasons the Navy was opposed to consolidating this training with the Army was because the Navy used initial fixed-wing training as a "cutting" tool for students.

a. Do you believe this to be the case, and is there any legitimate reason why the Navy needs this extra "cutting" tool?

b. Could the Navy use the Army's training syllabus that places student pilots directly into the rotary wing pipeline?

ANSWER: Mr. Nemfakos. The Navy practice of using fixed-wing aircraft in rotary-wing pilot track selection and training was validated by a 1994 Center for Naval Analysis study which concluded that *"Splitting the current Navy primary into two separate tracks, rotary primary and fixed-wing primary, could increase attrition if current standards are maintained. Attrition would be higher in each track than in the present unified primary and thus would be higher overall."* Increasing attrition will increase the cost of training and require increased accessions. In addition, the study forwards the following training considerations:

"The motor skills and learned responses needed to fly helicopters and fixed-wing airplanes in forward flight are almost exactly the same... These skills are transferable."

"Flying helicopters in hover mode is different from flying them in forward flight mode. From a training standpoint, it is sensible to first teach rotary-wing pilots forward flight in a fixed-wing trainer. Student pilots can then move to helicopters where they acquire specialized flight skills."

"Some flight training, particularly navigation and instrument flying, involves skills that are not specific to a particular type of aircraft."

The Air Force also supports the concept of undergraduate, primary fixed-wing training for its helicopter pilots. In December 1992 the Assistant Secretary of the Air Force stated *"...fixed-wing training before rotary-wing training produces a better trained helicopter pilot for less money."*

Based on the benefits of fixed-wing primary training, using the Army's curriculum would not meet Navy, Marine Corps and Coast Guard requirements.

8. According to the DoD IG, "Relocating the Navy's primary helicopter training to Fort Rucker would relieve ground and air traffic congestion at Whiting Field NAS."

a. Is there a problem with congestion at Whiting Field, both in the air and on the ground? If so, would relocation of the Navy's Undergraduate Helicopter Pilot Training program free-up space at Whiting Field?

b. How does Fort Rucker compare with Whiting with regard to available space?

c. Since the Army already owns nearly 80% of all DoD helicopters, does Fort Rucker have the capacity to train all of DoD's primary helicopter pilot requirements?

ANSWER: Mr. Nemfakos. There is no ground or air congestion at NAS Whiting Field. As previously stated, fixed wing (T-34C) aircraft normally conduct training operations at altitudes above 1500 feet and rotary wing (TH-57B/C) training aircraft operate in the airspace structure below 1500 feet. Commercial airliners overfly training airspace at altitudes above 24,000 feet. Navy fixed-wing aircraft conduct landing operations at exclusive fixed-wing airfields, which are specifically designed to train naval aviators to land day or night, in fair or foul weather, and aboard the confined landing areas of our ships at sea. These airfields are located within ten miles of home field, enhancing training efficiency and lowering cost per completed student sortie. NAS Whiting, in effect, is two airfields for the price of one. There are no course rule conflicts between fixed-wing and rotary-wing aircraft operating at these two fields. Operations in joint-use areas are normally conducted using air traffic control procedures and/or radar monitoring. Additionally, helicopters, by design, can operate at very slow airspeeds. As a result, near mid-air collisions involving Navy helicopters are virtually non-existent. In contrast, increased congestion at Fort Rucker would result from consolidating training there.

Fort Rucker is larger than NAS Whiting Field. However, NAS Whiting Field meets all present and future Navy requirements for primary and helicopter training and includes sufficient maritime operating areas for the Helicopter Landing Trainer ship. Additionally, the area around Fort Rucker has a much greater concentration of noise sensitive areas than does NAS Whiting Field.

Fort Rucker requires significant facilities MILCON, extensive rehabilitation and upgrade of existing structures and, equally important, extensive quality of life improvements to support consolidated training. Facilities meeting the Navy's requirements for both mission and quality of life are currently available and in use at NAS Whiting Field.

DOYLE REEDY

Navy Pensacola
5:00 Feb 8, 1995

Capacity

Taylor - have ship capacity now
could homeport a Nimitz class
(channel, turning basin, steam
but not nuclear) can handle
carrier, & frigats
no SEMA (phase maint.)
(4 installations included)

Jim Taylor - VP of Chamber, Chf. Nav. Air Trng
John Griffin - Chamber
John V. - two county / chamber of Com
Paul Hirsh - Dir. of Analysis Comm
Dave Obrien - asst. to Paul
Wayne Arnay -

T. Smith - don't think we can combine Hel. Army and Navy trng

Pensacola

- may need to functionalize training
- question is, how will jointness continue and at what rate w/o JPATS ?
- Project Blue Air - study of airspace density, (July 1994) - "no potential problems"

DEFENSE BASE CLOSURE & REALIGNMENT COMMISSION
1700 NORTH MOORE STREET, SUITE 1425
ARLINGTON, VIRGINIA 22209
(703) 696-0504

MEMORANDUM OF MEETING

DATE: February 8, 1995

TIME: 5:00

MEETING WITH: Pensacola Chamber of Commerce

SUBJECT: Military Installations in Pensacola

PARTICIPANTS:

Name/Title/Phone Number:

Jimmie Taylor; VP, Military Affairs Committee
John Griffing; President, Pensacola Chamber of Commerce
Don Salter; Chrmn, Military Affairs Committee
Bart Roper; Office of Cong. Scarborough
Paul Hirsch; Consultant
Wayne Arney; Consultant

Commission Staff:

David Lyles, Staff Director
Charles Smith, Executive Director/Special Assistant
Madelyn Creedon, General Counsel
Cece Carman, Director of Congressional and Intergovernmental Affairs
Chip Walgren, Manager, State and Local Liaison
Jim Schufreider; Manager, House Liaison
Ben Borden, Director, Review & Analysis
Ed Brown, Army Team Leader
Frank Cirillo, Air Force Team Leader
Bob Cook, Interagency Issues Team Leader
Jim Owsley, Cross-Service Team Leader
Alex Yellin, Navy Team Leader

MEETING PURPOSE:

Train Like You Fight!

The United States military must concentrate on how to train the best capable pilot predicated on mission requirements and economics, but never solely on economics.

The United States Army and Navy each conduct their own respective helicopter flight training programs for a very good reason...the ultimate combat environment that each services operates in is inherently different, demanding an emphasis on different aviation skills appropriately learned in their respective aviation programs. "Train Like You Fight", is a reality based on 85 years of flight training experience. What differentiates Army and Navy Helicopter Flight Training is not the quality of the student, instructors or aircraft but the ultimate combat environment that each service operates in and the respective missions that its aviators are expected to accomplish.

The Army Helicopter pilot is trained to support the Army mission on land, i.e. "in the field". Consequently, their training programs logically emphasize the day/night contact (with visual reference to the horizon) flying under VMC (Visual Meteorological Conditions) rules, ground contact environment in which they operate. Their training necessarily emphasizes low-level tactical flying/navigation, slope and confined area landings/takeoffs, tactical formation flying and night vision goggle training. Their instrument flying qualification is consequently designed to meet only minimum FAA requirements. Upon graduation, the Army helicopter pilot has accumulated 157 hours of actual flight time plus an additional 30 hours in flight simulators.

The Navy Helicopter Flight Training Program is conducted first in a fixed-wing T-34C then in the TH-57 helicopter. Both syllabuses are instrument intensive, emphasizing day/night Instrument Meteorological Condition (IMC rules), reflecting the capricious all weather environment in which Navy ships with their assigned aircraft operate. The Primary fixed-wing phase enables the Navy to accelerate the student pilots adaptation to an instrument environment by teaching unusual attitudes, out-of-control flight and acrobatic flight thus facilitating consequent three-dimensional situation awareness that can only be achieved by training in a fully acrobatic fixed-wing aircraft. Also compelling is the fact that future military aircraft combine the flight characteristics of fixed-wing and rotary-wing aircraft as in the V-22 Osprey and the AV8B Harrier.

Obviously, Navy pilots fly at sea. In order to assure the ultimate accomplishment of their helicopter missions and because they often operate in areas of the world that do not have navigation aides, Navy ships create and maintain their own Instrument Air Traffic Control System comprised of shipborne TACANS, RADAR and Aircraft Controllers aboard every ship in the fleet at sea. Ships in Navy Battle Groups are tactically widely dispersed at sea often experiencing diverse weather phenomena at the same time. Consequently, Navy Helos frequently fly IFR while conducting their daily routine missions whatever the tactical environment.

Upon graduation, the Navy Helicopter Pilot will have accumulated a total of 208.4 hours of actual flight time plus an additional 80.1 hours in flight simulators. Of the total 208.4 actual flight hours, 87.5 actual flight hours (42%) are instrument flight hours. Additionally 50% of the academic syllabus (191 hours) is devoted to instrument training.

Thus the Navy truly fulfills the ideal...TRAIN LIKE YOU FIGHT!...thereby producing a superbly trained helicopter pilot able to accomplish the mission.

Train Like You Fight!

The United States military must concentrate on how to train the best capable pilot predicated on mission requirements and economics, but never solely on economics.

The United States Army and Navy each conduct their own respective helicopter flight training programs for a very good reason...the ultimate combat environment that each services operates in is inherently different, demanding an emphasis on different aviation skills appropriately learned in their respective aviation programs. "Train Like You Fight", is a reality based on 85 years of flight training experience. What differentiates Army and Navy Helicopter Flight Training is not the quality of the student, instructors or aircraft but the ultimate combat environment that each service operates in and the respective missions that its aviators are expected to accomplish.

The Army Helicopter pilot is trained to support the Army mission on land, i.e. "in the field". Consequently, their training programs logically emphasize the day/night contact (with visual reference to the horizon) flying under VMC (Visual Meteorological Conditions) rules, ground contact environment in which they operate. Their training necessarily emphasizes low-level tactical flying/navigation, slope and confined area landings/takeoffs, tactical formation flying and night vision goggle training. Their instrument flying qualification is consequently designed to meet only minimum FAA requirements. Upon graduation, the Army helicopter pilot has accumulated 157 hours of actual flight time plus an additional 30 hours in flight simulators.

The Navy Helicopter Flight Training Program is conducted first in a fixed-wing T-34C then in the TH-57 helicopter. Both syllabuses are instrument intensive, emphasizing day/night Instrument Meteorological Condition (IMC rules), reflecting the capricious all weather environment in which Navy ships with their assigned aircraft operate. The Primary fixed-wing phase enables the Navy to accelerate the student pilots adaptation to an instrument environment by teaching unusual attitudes, out-of-control flight and acrobatic flight thus facilitating consequent three-dimensional situation awareness that can only be achieved by training in a fully acrobatic fixed-wing aircraft. Also compelling is the fact that future military aircraft combine the flight characteristics of fixed-wing and rotary-wing aircraft as in the V-22 Osprey and the AV8B Harrier.

Obviously, Navy pilots fly at sea. In order to assure the ultimate accomplishment of their helicopter missions and because they often operate in areas of the world that do not have navigation aides, Navy ships create and maintain their own Instrument Air Traffic Control System comprised of shipborne TACANS, RADAR and Aircraft Controllers aboard every ship in the fleet at sea. Ships in Navy Battle Groups are tactically widely dispersed at sea often experiencing diverse weather phenomena at the same time. Consequently, Navy Helos frequently fly IFR while conducting their daily routine missions whatever the tactical environment.

Upon graduation, the Navy Helicopter Pilot will have accumulated a total of 208.4 hours of actual flight time plus an additional 80.1 hours in flight simulators. Of the total 208.4 actual flight hours, 87.5 actual flight hours (42%) are instrument flight hours. Additionally 50% of the academic syllabus (191 hours) is devoted to instrument training.

Thus the Navy truly fulfills the ideal...TRAIN LIKE YOU FIGHT!...thereby producing a superbly trained helicopter pilot able to accomplish the mission.

AIR FORCE CATEGORIES

CATEGORY	NUMBER
MISSILES	4
LARGE AIRCRAFT	22
SMALL AIRCRAFT	15
UNDERGRADUATE PILOT TRAINING	5
DEPOTS	5
LABS & PRODUCT CENTERS	6
TEST & EVALUATION	4
SPACE SUPPORT	3
SATELLITE CONTROL	2
AIR FORCE RESERVE	14
AIR NATIONAL GUARD	13
ADMINISTRATIVE	4
TECHNICAL TRAINING	4

HIGHLIGHTED CATEGORIES HAVE CANDIDATES FOR FURTHER CONSIDERATION.

AIR FORCE
CATEGORY: MISSILE/LARGE AIRCRAFT

TIER	INSTALLATION	TIER	INSTALLATION
I	Altus AFB, OK	Excl	Hickam AFB, HI
Excl	Andersen AFB, GU	I	Little Rock AFB, AR
Excl	Andrews AFB, MD	**II**	***Malmstrom AFB, MT*** **(M)(R)** ***(*)***
I	Barksdale AFB, LA	Excl	McChord AFB, WA
II	Beale AFB, CA	I	McConnell AFB, KS
I	Charleston AFB, SC	II	McGuire AFB, NJ
I	Dover AFB, DE	**II**	***Minot AFB, ND*** **(M)** ***(*)***
I	Dyess AFB, TX	II	Offutt AFB, NE
III	Ellsworth AFB, SD	III	Scott AFB, IL
Excl	***F.E. Warren AFB, WY*** **(M)** ***(*)***	I	Travis AFB, CA
I	Fairchild AFB, WA	I	Whiteman AFB, MO
III	***Grand Forks AFB, ND*** **(M) (R)** ***(*)***		

(C) = DoD recommendation for closure
(R) = DoD recommendation for realignment
(*) = *Candidate for further consideration*
(M) = Missile Base

Missile/Large Aircraft Bases

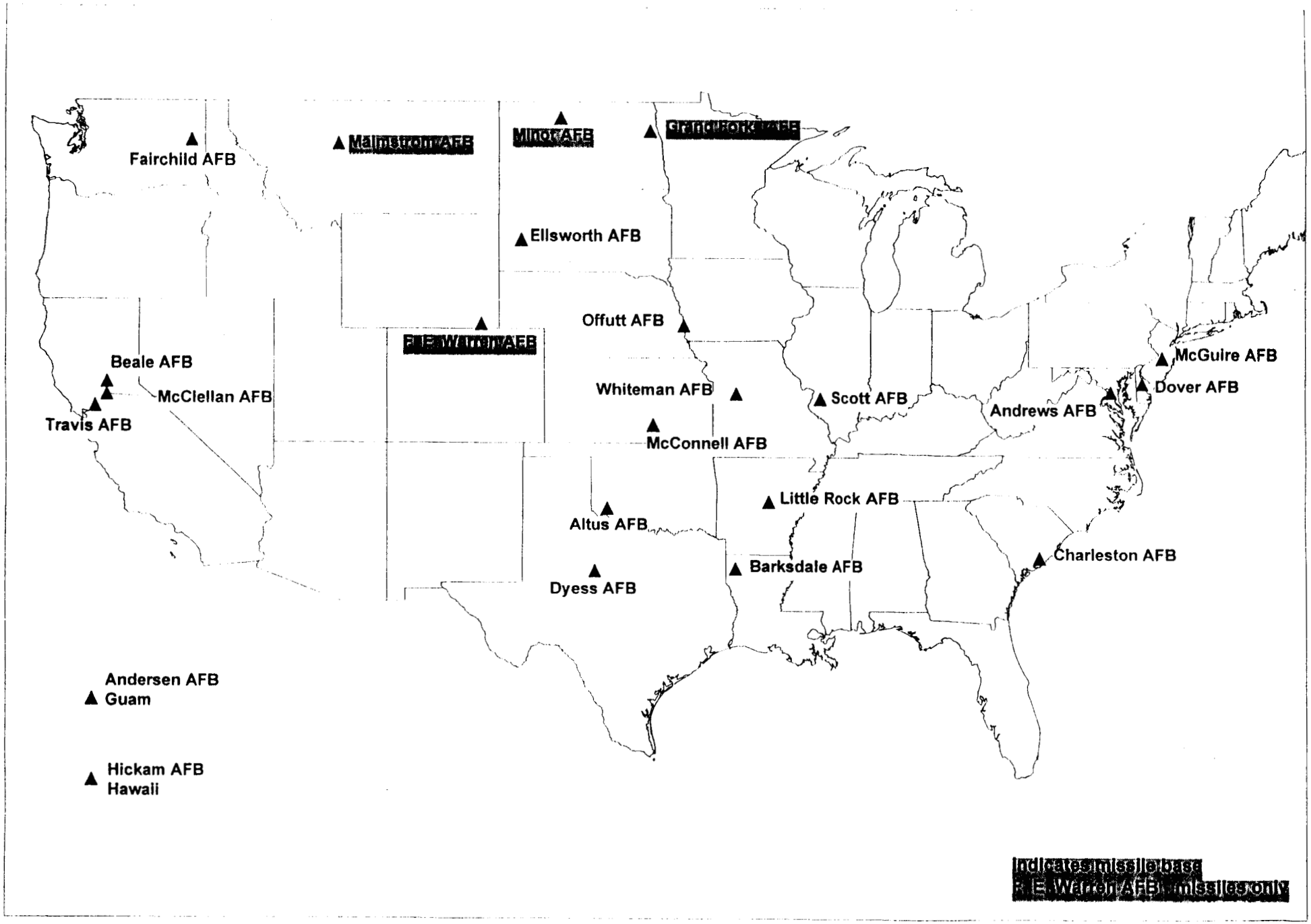

3

MISSILE/LARGE AIRCRAFT
CAPACITY ANALYSIS

AIR FORCE

- **Determined an excess of 1 missile base**
- **Determined an excess of approximately 2-3 large aircraft bases**
  - **1-2 Bomber bases**
  - **1 Airlift base**
  - **Included Depot airfield capacity**
- **Recommended relocation of Malmstrom AFB KC-135 operations and closure of airfield except for helicopter support activity**

AIR FORCE
MISSILE BASES

TIER	INSTALLATION
Excluded	*F.E. WARREN AFB, WY* *(*)*
III	*GRAND FORKS AFB, ND* (R)*(*)*
II	*MALMSTROM AFB, MT* (R)*(*)*
II	*MINOT AFB, ND* (**)*(*)*

(C) = DoD recommendation for closure
(R) = DoD recommendation for realignment
(*) = *Candidate for further consideration*
(**) = March 7, 1995 Commission Add for realignment (Missile Field)

NORTHERN TIER MISSILE BASES
DOD RECOMMENDATIONS VERSUS COMPLETE CLOSURES

	GRAND FORKS, ND	MINOT, ND	MALMSTROM, MT	FE WARREN, WY
		MISSILES		
MINUTEMAN III MISSILES	**150** **DOD RECOMMENDED FOR REALIGNMENT** • Low ranked mil effectiveness and maintenance	150 Not Recommended but added by Commission • Middle ranked mil effectiveness and maintenance	200 Not Recommended • High ranked mil effectiveness and maintenance	150 Excluded • Peacekeeper drawdown and START
PEACEKEEPER MISSILES	0	0	0	50
		AIRCRAFT		
KC-135 AIRCRAFT	48 Not Recommended • Core Tanker Base	0	**12** **DOD RECOMMENDED FOR REALIGNMENT** • Operating limitations	0
B-52 AIRCRAFT	0	12 Not Recommended • USAF not seeking to relocate bombers	0	0

Note: 80 launchers at Malmstrom AFB currently have Minuteman III missiles in place; 120 are awaiting conversion to Minuteman III when missiles become available.

BASE ANALYSIS
CATEGORY: MISSILE/LARGE AIRCRAFT

DOD RECOMMENDATION: Realign Malmstrom AFB by relocating the 43rd Air Refueling Group to MacDill AFB.

CRITERIA	MALMSTROM, MT (R)*(*) (Realign KC-135 Acft)
AIR FORCE TIERING	II
BCEG RANK	11/18
FORCE STRUCTURE	80 MINUTEMAN III 120 MINUTEMAN X 12 KC-135 Aircraft
ONE-TIME COSTS ($ M)	17.4
ANNUAL SAVINGS ($ M)	5.1
RETURN ON INVESTMENT	4 Years
BASE OPERATING BUDGET ($ M)	21.8
PERSONNEL ELIMINATED (MIL/CIV) PERSONNEL REALIGNED (MIL/CIV)	0/0 719/19
ECONOMIC IMPACT (BRAC95/CUM)	3.0%/3.0%
ENVIRONMENTAL	Asbestos/Siting

(C) = DoD recommendation for closure
(R) = DoD recommendation for realignment
(*) = Candidate for further consideration
(**) = March 7, 1995 Commission Add for realignment (Missile Field)

BASE ANALYSIS
CATEGORY: MISSILE/LARGE AIRCRAFT

DOD RECOMMENDATION: Realign Grand Forks AFB by inactivating the 321st Missile Group.

CRITERIA	GRAND FORKS, ND (R)*(*)* (Realign MM III)	MINOT, ND (**)*(*)* (Realign MM III)
AIR FORCE TIERING	III	II
BCEG RANK	17/18	15/18
FORCE STRUCTURE	150 MINUTEMAN III 48 KC-135 Aircraft	150 MINUTEMAN III 12 B-52 Aircraft
ONE-TIME COSTS ($ M)	11.9	12.0
ANNUAL SAVINGS ($ M)	35.2	36.0
RETURN ON INVESTMENT	Immediate	Immediate
BASE OPERATING BUDGET ($ M)	26.7	26.7
PERSONNEL ELIMINATED (MIL/CIV) PERSONNEL REALIGNED (MIL/CIV)	802/35 0/0	809/46 0/0
ECONOMIC IMPACT (BRAC95/CUM)	2.4%/2.4%	3.1%/3.1%
ENVIRONMENTAL	Asbestos/Siting	Siting

(C) = DoD recommendation for closure
(R) = DoD recommendation for realignment
(*) = Candidate for further consideration
(**) = March 7, 1995 Commission Add for realignment (Missile Field)

8

BASE ANALYSIS
CATEGORY: MISSILE/LARGE AIRCRAFT

CRITERIA	GRAND FORKS, ND (R)(*) (Realign MM III)	MINOT, ND (**)(*) (Realign MM III)	F.E. WARREN, WY (*) (Realign MM III)	MALMSTROM, MT (R)(*) (Closure)
AIR FORCE TIERING	III	II	Excluded	II
BCEG RANK	17/18	15/18	Excluded	11/18
FORCE STRUCTURE	150 MINUTEMAN III 48 KC-135 Aircraft	150 MINUTEMAN III 12 B-52 Aircraft	150 MINUTEMAN III 50 PEACEKEEPER	80 MINUTEMAN III 120 MINUTEMAN X 12 KC-135 Aircraft
ONE-TIME COSTS ($ M)	11.9	12.0	84.3	96.4
ANNUAL SAVINGS ($ M)	35.2	36.0	16.1	113.9
RETURN ON INVESTMENT	Immediate	Immediate	3 Years	1 Year
BASE OPERATING BUDGET ($ M)	26.7	26.7	16.9	21.8
PERSONNEL ELIMINATED (MIL/CIV) PERSONNEL REALIGNED (MIL/CIV)	802/35 0/0	809/46 0/0	376/27 103/5	2,132/277 1,135/182
ECONOMIC IMPACT (BRAC95/CUM)	2.4%/2.4%	3.1%/3.1%	1.4%/1.4%	9.3%/9.3%
ENVIRONMENTAL	Asbestos/Siting	Siting	Siting	Asbestos/Siting

(C) = DoD recommendation for closure
(R) = DoD recommendation for realignment
(*) = Candidate for further consideration
(**) = March 7, 1995 Commission Add for realignment (Missile Field)

BASE ANALYSIS
CATEGORY: MISSILE/LARGE AIRCRAFT

CRITERIA	MALMSTROM, MT (R)(*) (Closure)	GRAND FORKS, ND (R)(*) (Closure)	MINOT, ND (**)(*) (Closure)
AIR FORCE TIERING	II	III	II
BCEG RANK	11/18	17/18	15/18
FORCE STRUCTURE	80 MINUTEMAN III 120 MINUTEMAN X 12 KC-135 Aircraft	150 MINUTEMAN III 48 KC-135 Aircraft	150 MINUTEMAN III 12 B-52 Aircraft
ONE-TIME COSTS ($ M)	96.4	81.4	230.4
ANNUAL SAVINGS ($ M)	113.9	87.6	98.2
RETURN ON INVESTMENT	1 Year	1 Year	2 Years
BASE OPERATING BUDGET ($M)	21.8	26.7	26.7
PERSONNEL ELIMINATED (MIL/CIV) PERSONNEL REALIGNED (MIL/CIV)	2,132/277 1,135/182	1,597/116 2,354/309	1,846/230 1,947/261
ECONOMIC IMPACT (BRAC95/CUM)	9.3%/9.3%	12.7%/12.7%	15.8%/15.8%
ENVIRONMENTAL	Asbestos/Siting	Asbestos/Siting	Siting

(C) = DoD recommendation for closure
(R) = DoD recommendation for realignment
(*) = Candidate for further consideration
(**) = March 7, 1995 Commission Add for realignment (Missile Field)

BASE ANALYSIS
CATEGORY: MISSILE/LARGE AIRCRAFT

FOR CONSIDERATION: Study Grand Forks , Minot, and Malmstrom AFBs for **REALIGNMENT** or **CLOSURE** and F.E. Warren AFB for **REALIGNMENT**.

CRITERIA	GRAND FORKS, ND (R)*(*) (Closure)	MINOT, ND (**)*(*) (Closure)	MALMSTROM, MT (R)*(*) (Closure)	F.E. WARREN, WY *(*)* (Realign MM III)
AIR FORCE TIERING	III	II	II	Excluded
BCEG RANK	17/18	15/18	11/18	Excluded
FORCE STRUCTURE	150 MINUTEMAN III 48 KC-135 Aircraft	150 MINUTEMAN III 12 B-52 Aircraft	80 MINUTEMAN III 120 MINUTEMAN X 12 KC-135 Aircraft	150 MINUTEMAN III 50 PEACEKEEPER
ONE-TIME COSTS ($ M)	81.4	230.4	96.4	84.3
ANNUAL SAVINGS ($ M)	87.6	98.2	113.9	16.1
RETURN ON INVESTMENT	1 Year	2 Years	1 Year	3 Years
BASE OPERATING BUDGET ($M)	26.7	26.7	21.8	16.9
PERSONNEL ELIMINATED (MIL/CIV) PERSONNEL REALIGNED (MIL/CIV)	1,597/116 2,354/309	1,846/230 1,947/261	2,132/277 1,135/182	376/27 103/5
ECONOMIC IMPACT (BRAC95/CUM)	12.7%/12.7%	15.8%/15.8%	9.3%/9.3%	1.4%/1.4%
ENVIRONMENTAL	Asbestos/Siting	Siting	Asbestos/Siting	Siting

(C) = DoD recommendation for closure
(R) = DoD recommendation for realignment
(*) = *Candidate for further consideration*
(**) = March 7, 1995 Commission Add for realignment (Missile Field)

MISSILE/LARGE AIRCRAFT BASES
MAJOR ISSUES

MAJOR ISSUES	GRAND FORKS, ND	MINOT, ND	MALMSTROM, MT	F.E. WARREN, WY
Anti Ballistic Missile Site	Yes	No	No	No
Force Structure	Consistent with Nuclear Posture Review 500 MM III 3,500 Total TRIAD	Consistent with Nuclear Posture Review 500 MM III 3,500 Total TRIAD	Consistent with Nuclear Posture Review 450 MM III 3,500 Total TRIAD	Consistent with Nuclear Posture Review 500 MM III 3,500 Total TRIAD
Survivability	Hardened Silos Compact Field	Hardened Silos Compact Field	Hardened Silos Expansive Field	Hardened Silos Compact Field
Maintainability	Single System Compact Field 99% Alert Rate	Single System Compact Field 99% Alert Rate	Two Systems Expansive Field 99% Alert Rate	Single System Compact Field 99% Alert Rate
Total on site depot support costs 1993-1995 (Water intrusion, wind anomalies, etc.) ($ M)	8.1	7.0	11.4	10.4
Annual on site depot support costs per launch facility	$18,101 per launch facility	$15, 670 per launch facility	$19,162 per launch facility	$23,028 per launch facility
Tanker saturation in Northwest	Yes	N/A	Yes	N/A
Airfield Elevation	911 Ft.	1,660 Ft.	3,526 Ft.	N/A

AIR FORCE
CATEGORY: UNDERGRADUATE PILOT TRAINING (UPT) BASES

TIER	INSTALLATION	
I	*Columbus AFB, MS*	*(*)*
I	*Laughlin AFB, TX*	*(*)*
I	Randolph AFB, TX	
III	**Reese AFB, TX**	**(X) (C)**
Excl	Sheppard AFB, TX	
I	*Vance AFB, OK*	**(X)** *(*)*

(C) = DoD recommendation for closure
(X) = Joint Cross-Service Group option for closure
(*) = Candidate for further consideration

Undergraduate Pilot Training Bases

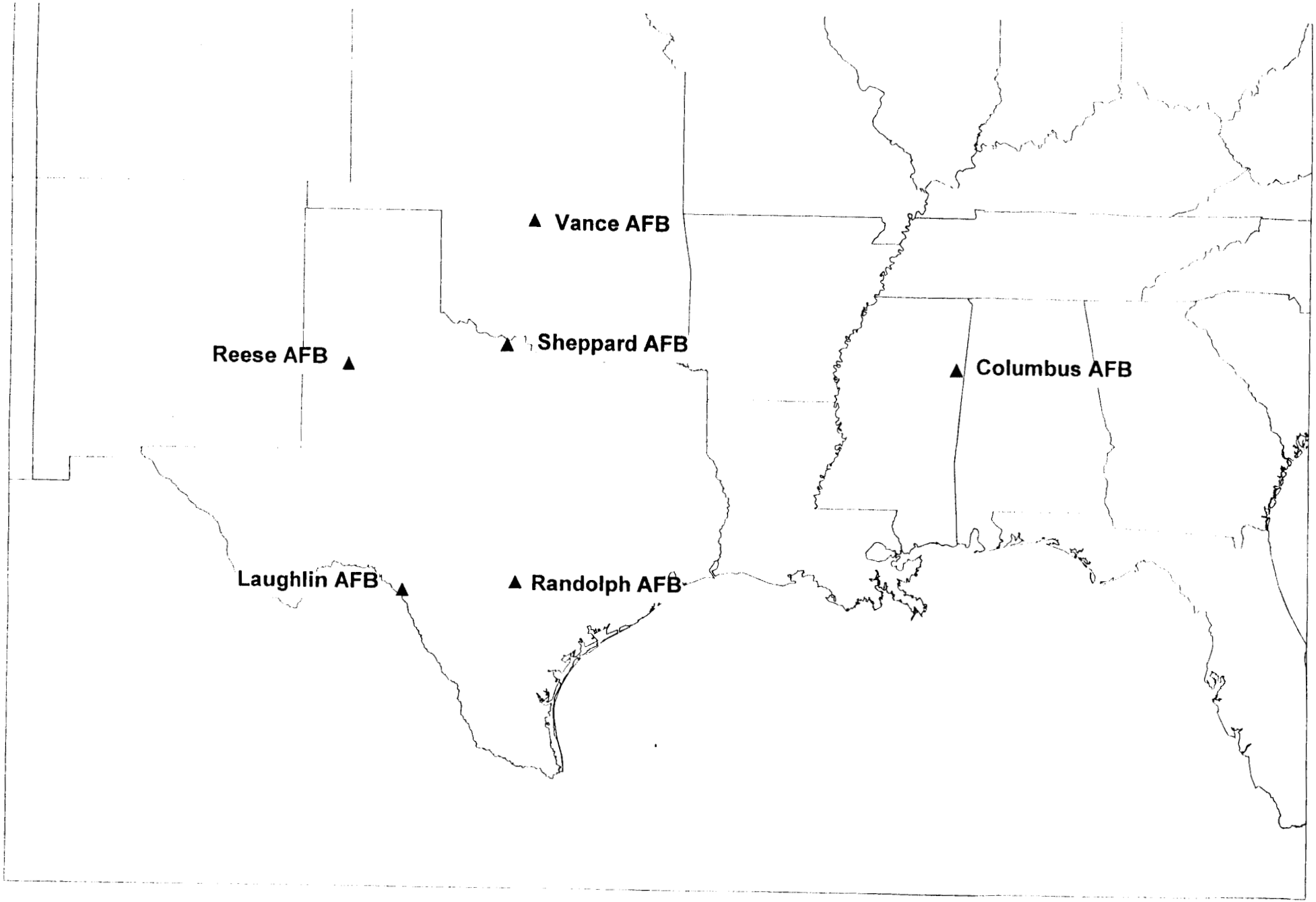

BASE ANALYSIS
CATEGORY: UNDERGRADUATE PILOT TRAINING (UPT)

DOD RECOMMENDATION: Close Reese, Inactivate 64th Flying Training Wing, Relocate/Retire other assigned aircraft.
FOR CONSIDERATION: Study Columbus, Laughlin, and Vance AFBs **FOR CLOSURE**.

CRITERIA	REESE, TX (X) (C) Closure	COLUMBUS, MS (*) Closure	LAUGHLIN, TX (*) Closure	VANCE, OK (X) (*) Closure
AIR FORCE TIERING	III	I	I	I
BCEG RANK	5/5	2/5	3/5	3/5
FUNC VALUE: Air Force/JCSG	6.22 (Red)	6.74 (Green)	6.50 (Yellow +)	6.67 (Green)
FUNC VALUE: Staff Analysis I	6.4	7.2	7.8	6.7
FUNC VALUE: Staff Analysis II	6.3	6.4	7.4	6.3
FORCE STRUCTURE	21 T-1A 48 T-37B 51 T-38	45 T-37B 57 T-38/21 AT-38	21 T-1A 48 T-37B 51 T-38	46 T-37B 69 T-38
ONE-TIME COSTS ($ M)	15.8	18.2	25.9	14.7
ANNUAL SAVINGS ($ M)	19.7	25.3	21.6	19.5
RETURN ON INVESTMENT	1 Year	1 Year	2 Years	1 Year
BASE OPERATING BUDGET ($ M)	21.0	26.3	23.7	26.3
PERSONNEL ELIMINATED(MIL/CIV) PERSONNEL REALIGNED(MIL/CIV)	209/0 691/245	315/0 750/252	282/101 749/644	202/0 645/208
ECONOMIC IMPACT (BRAC95/CUM)	1.2%/1.2%	6.3%/6.3%	18.8%/18.8%	11.0%/11.0%
ENVIRONMENTAL	Siting	Asbestos	Asbestos	Asbestos

(C) = DoD recommendation for closure
(R) = DoD recommendation for realignment
(X) = Joint Cross-Service Group option for closure
(*) = Candidate for further consideration

STAFF METHODOLOGY
CATEGORY: UNDERGRADUATE PILOT TRAINING (UPT)

STAFF ANALYSIS - I

OBJECTIVE: Test the validity of Air Force Analysis

METHODOLOGY:

- Utilize UPT Joint Cross-Service Group computer model and corrected data
- Consider UPT Measures of Merit relevant to Air Force UPT
- Delete those Measures of Merit considered in CRITERIA II through VIII
- Modify Weighting Factors in accordance with Staff judgment of Air Force priorities
- Determine a Functional Value score for each Air Force UPT Base
  -- Apply result to CRITERIA I, "MISSION REQUIREMENTS: FLYING TRAINING"

STAFF ANALYSIS - II

OBJECTIVE: Assess impact of making data corrections

METHODOLOGY:

- Use Analysis I as starting point
- Change data to reflect corrections to UPT-JCSG and Air Force data calls

AIR FORCE
CATEGORY: AIR FORCE RESERVE BASES

Bergstrom ARB, TX	**(C)**	March ARB, CA	
Carswell ARB, TX	***(*)***	***Minneapolis-St. Paul IAP ARS, MN***	***(*)***
Dobbins ARB, GA		NAS Willow Grove ARS, PA	
Gen Mitchell IAP ARS, WI	***(*)***	***Niagara Falls IAP ARS, NY***	***(*)***
Greater Pittsburgh IAP ARS, PA	**(C)**	***O'Hare IAP ARS, IL***	***(*)***
Grissom ARB, IN		Westover ARB, MA	
Homestead ARS, FL	**(R)*(*)***	***Youngstown-Warren MPT ARS, OH***	***(*)***

(R) = DoD recommendation for realignment
(C) = DoD recommendation for closure
(*) = Candidate for further consideration

Air Force Reserve Bases

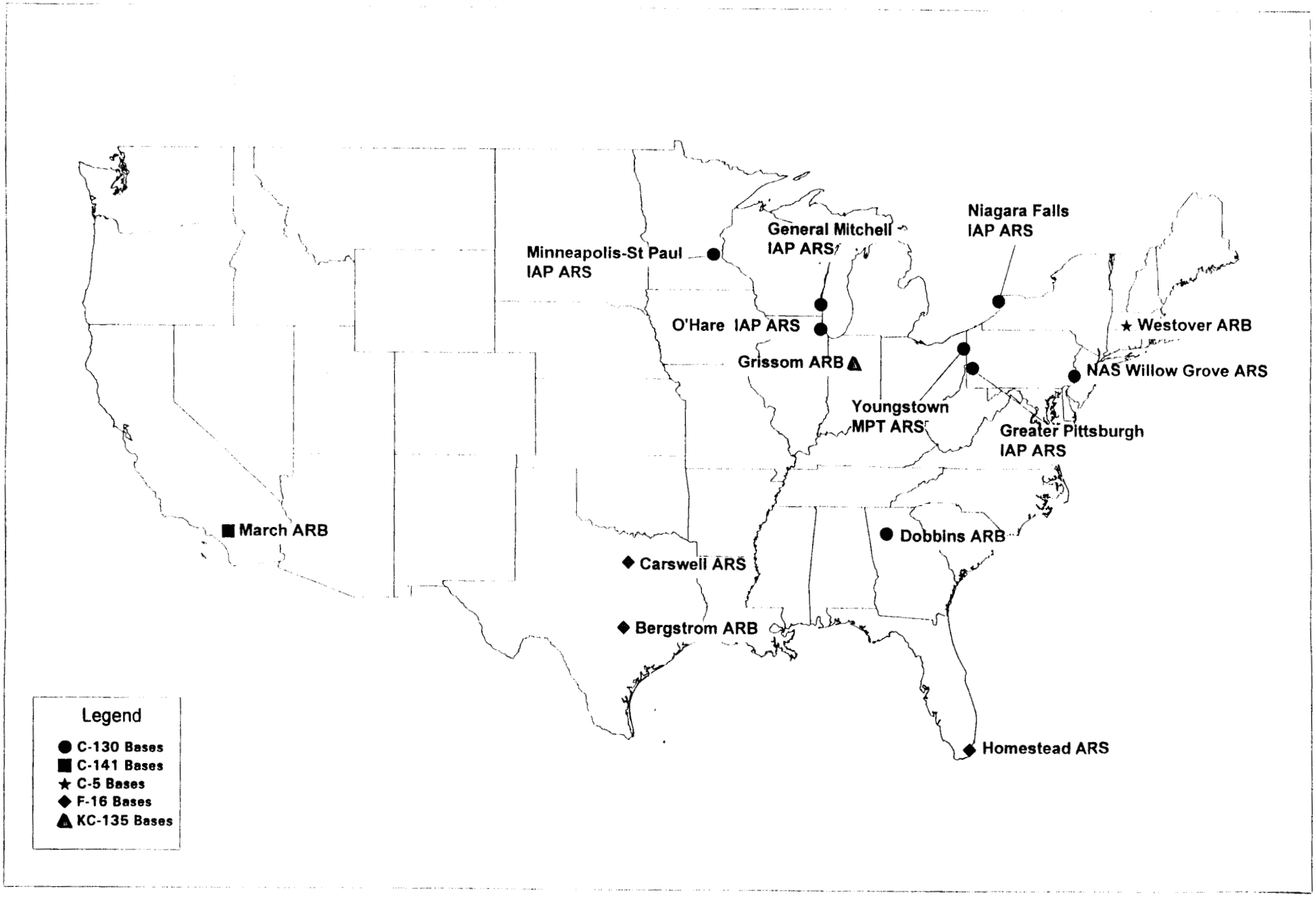

AIR FORCE RESERVE: F-16 BASES

TIER	INSTALLATION	
N/A	**Bergstrom ARB, TX**	**(C)**
N/A	***Carswell ARB, TX***	***(*)***
N/A	***Homestead ARB, FL***	**(R)*(*)***

(C) = DoD recommendation for closure
(R) = DoD recommendation for realignment
(*) = *Candidate for further consideration*

BASE ANALYSIS
CATEGORY: AIR FORCE RESERVE (F-16)

DOD RECOMMENDATION: Close Bergstrom, relocate 10th Air Force to Carswell ARB (NAS Fort Worth)
FOR CONSIDERATION: Study Homestead and Carswell ARBs **FOR CLOSURE**.

CRITERIA	BERGSTROM, TX (C)	HOMESTEAD, FL (R) *(*)*	CARSWELL, TX *(*)*
AIR FORCE TIERING	N/A	N/A	N/A
BCEG RANK	N/A	N/A	N/A
FORCE STRUCTURE	15 F-16C/D	15 F-16A/B	18 F-16C/D
ONE-TIME COSTS ($ M)	13.0	12.6	7.9
ANNUAL SAVINGS ($ M)	18.4	17.3	13.2
RETURN ON INVESTMENT	Immediate	1 Year	1 Year
BASE OPERATING BUDGET ($ M)	9.2	9.1	5.4
PERSONNEL ELIMINATED (MIL/CIV)	0/263	0/247	0/219
PERSONNEL REALIGNED (MIL/CIV)	0/94	0/127	0/0
ECONOMIC IMPACT (BRAC95/CUM)	0.1%/0.3%	0.1%/0.1%	0.1%/0.1%
ENVIRONMENTAL	None	Asbestos/Flood Plain	None

(C) = DoD recommendation for closure
(R) = DoD recommendation for realignment
(*) = Candidate for further consideration

AIR FORCE RESERVE: C-130 BASES

TIER	INSTALLATION	
N/A	Dobbins ARB, GA	
N/A	***Gen. Mitchell IAP ARS, WI***	***(*)***
N/A	**Greater Pittsburgh IAP ARS, PA**	**(C)**
N/A	***Minneapolis-St. Paul, MN***	***(*)***
N/A	NAS Willow Grove ARS, PA	
N/A	***Niagara Falls IAP ARS, NY***	***(*)***
N/A	***O'Hare IAP ARS, IL***	***(*)***
N/A	***Youngstown-Warren MPT, OH***	***(*)***

(C) = DoD recommendation for closure
(R) = DoD recommendation for realignment
(*) = *Commissioner candidate for further consideration*

BASE ANALYSIS
CATEGORY: AIR FORCE RESERVE (C-130)

DOD RECOMMENDATION: Close Greater Pittsburgh Air Reserve Station
FOR CONSIDERATION: Study Chicago O'Hare, Gen Mitchell, Minneapolis-St. Paul, Niagara Falls, and Youngstown-Warren **FOR CLOSURE.**

CRITERIA	PITTSBURGH, PA (C)	GEN MITCHELL, WI (*)	MINNEAPOLIS-ST. PAUL, MN (*)
AIR FORCE TIERING	N/A	N/A	N/A
BCEG RANK	N/A	N/A	N/A
FORCE STRUCTURE	8 C-130	8 C-130	8 C-130
ONE-TIME COSTS ($ M)	12.7	13.0	13.9
ANNUAL SAVINGS ($ M)	7.5	9.8	9.6
RETURN ON INVESTMENT	2 Years	1 Year	2 Years
BASE OPERATING BUDGET ($ M)	2.4 (5.7)	3.2	5.7
NET PRESENT VALUE ($M)	92.0 (138.0)	125.0	119.0
PERSONNEL ELIMINATED (MIL/CIV)	0/110	0/143	0/84
PERSONNEL REALIGNED (MIL/CIV)	0/237	0/237	0/237
ECONOMIC IMPACT (BRAC95/CUM)	0.0%/0.0%	0.1%/0.1%	0.0%/0.0%
ENVIRONMENTAL	Non-attainment - Ozone	Non-attainment - Ozone	Non-attainment - CO

(C) = DoD recommendation for closure
(R) = DoD recommendation for realignment
(*) = Commissioner candidate for further consideration

BASE ANALYSIS
CATEGORY: AIR FORCE RESERVE (C-130)

DOD RECOMMENDATION: Close Greater Pittsburgh Air Reserve Station
FOR CONSIDERATION: Study Chicago O'Hare, Gen Mitchell, Minneapolis-St. Paul, Niagara Falls, and Youngstown-Warren **FOR CLOSURE.**

CRITERIA	NIAGARA FALLS, NY (*)	O'HARE, IL (*)	YOUNGSTOWN-WARREN, OH (*)
AIR FORCE TIERING	N/A	N/A	N/A
BCEG RANK	N/A	N/A	N/A
FORCE STRUCTURE	8 C-130	8 C-130	8 C-130
ONE-TIME COSTS ($ M)	14.0	13.9	13.0
ANNUAL SAVINGS ($ M)	10.4	10.2	8.6
RETURN ON INVESTMENT	1 Year	1 Year	2 Years
BASE OPERATING BUDGET ($ M)	7.2 (5.7)	4.0 (5.7)	1.9
NET PRESENT VALUE ($ M)	135.0 (115.0)	128.7(152.0)	107.0
PERSONNEL ELIMINATED (MIL/CIV)	0/81	0/142	0/143
PERSONNEL REALIGNED (MIL/CIV)	0/237	0/237	0/237
ECONOMIC IMPACT (BRAC95/CUM)	0.6%/0.6%	0.0%/0.0%	0.5%/0.5%
ENVIRONMENTAL	Non-attainment - Ozone	Non-attainment - Ozone	Non-attainment - Ozone

(C) = DoD recommendation for closure
(R) = DoD recommendation for realignment
(*) = Candidate for further consideration

BACKUP SLIDES I

SLIDE	CONTENTS
AF-101.	Capacity Analysis: Undergraduate Pilot Training Bases
AF-102.	Capacity Analysis: Sheppard Air Force Base
AF-103.	Reese Air Force Base Community Issues
AF-104.	UPT Joint Cross-Service Group Terms of Reference
AF-105.	Bergstrom Air Reserve Base Decisions
AF-106.	Bergstrom Air Reserve Base Community Issues
AF-107.	Base Analysis: Air Force Reserve (F-16) Bases (Major Issues)
AF-108.	Base Analysis: Air Force Reserve (C-130) Bases (Major Issues)
AF-109.	Base Analysis: Air Force Reserve (C-130) Bases (Major Issues)

CAPACITY ANALYSIS
CATEGORY: UNDERGRADUATE PILOT TRAINING (UPT) BASES

AIR FORCE UPT CAPACITY

- BASED CAPACITY ANALYSIS ON MEETING AIR FORCE PILOT TRAINING REQUIREMENTS (PTR) ONLY
- ASSUMES 5-DAY WORK WEEK TO ALLOW RECOVERY CAPACITY FOR UNFORESEEN IMPACTS
- CAPACITY EXPRESSED IN "UPT GRADUATE EQUIVALENTS."

CAPACITY	
COLUMBUS	408
LAUGHLIN	424
REESE	392
VANCE	396
SUBTOTAL	1,620
CLOSE LOWEST	- 392
TOTAL	1,228

REQUIREMENT	
BOMBER/FIGHTER	394
AIRLIFT/TANKER	592
FIXED-WING UPGRADE	4
FMS	31
SUBTOTAL	1,021
INTRO, FIGHTER FUND	57
TOTAL	1,078

CAPACITY	1,228	
PTR	- 1,078	
	150	(12% EXCESS)

NEED FOR EXCESS

- JPATS TRANSITION 100
- INSTRUCTOR CROSSFLOW (T-37 TO T-38): 39
- OPERATIONS BEYOND 95% CAPACITY WILL BE COMPROMISED

AF-101

SHEPPARD AFB CAPACITY ANALYSIS
CATEGORY: UNDERGRADUATE PILOT TRAINING (UPT) BASES

EURO-NATO JOINT JET PILOT TRAINING PROGRAM (ENJJPT)

- COMBINES USAF AND NATO UPT IN A MODIFIED PROGRAM
- INTERNATIONAL AGREEMENT CONSTRAINS AIR FORCE OPTIONS
- CAPACITY EXPRESSED IN "ENJJPT EQUIVALENTS."

REQUIREMENT	
ACTIVE AIR FORCE	98
AIR NATIONAL GUARD	11
NATO	123
SUBTOTAL	232
INTRO, FTR FUND	25
TOTAL	257

CAPACITY	320	
PTR	-257	
	63	(20% EXCESS)

NEED FOR EXCESS

- JPATS TRANSITION
- AIR FORCE OVERFLOW FOR PRIMARY AND FIGHTER/BOMBER UPT TRACKS
- NATO REQUIREMENTS

AE-102

REESE AFB COMMUNITY ISSUES

CATEGORY: UNDERGRADUATE PILOT TRAINING (UPT)

DATA ERRORS:

- AIRSPACE UNDER-REPORTED BY 10,000 CU NM
- MILITARY TRAINING ROUTES (MTRs) UNDER-REPORTED BY 55%
- PERCENT ADEQUATE PAVEMENT 10% GREATER THAN REPORTED

MODELING ERRORS:

- INCLUDED AREAS INAPPROPRIATE FOR UPT MISSION EVALUATION
- WEIGHTING FACTORS INAPPROPRIATE FOR AIR FORCE UPT COMPARISONS
- DISCRIMINATORS TOO BROAD (WEATHER, AUXILIARY FIELDS)
- CALCULATION ERRORS
- STANDARD OF TRAINING NOT ADOPTED TO PROPERLY COMPARE AIR FORCE/NAVY CAPACITY

RESULT: ERROR IN CRITERIA I FLOWED INTO OVERALL TIERING AND CLOSURE RECOMMENDATION

COMMISSION EVALUATION

- COST EFFECTIVENESS:
  - LOWEST COST PER FLYING HOUR
  - 2ND LOWEST COST PER GRADUATE
- GAO COMMENT: QUESTIONED AIR FORCE UPT ANALYSIS

AF-102

UPT JCSG TERMS OF REFERENCE
CATEGORY: UNDERGRADUATE PILOT TRAINING (UPT) BASES

FUNCTIONAL AREAS (10)

- *** FLIGHT SCREENING**
- *** PRIMARY PILOT**
- *** AIRLIFT/TANKER**
- *** ADVANCED BOMBER/FIGHTER**
- STRIKE/ADVANCED E-2/C-2
- ADVANCED MARITIME/INTERMEDIATE E-2/C-2
- HELICOPTER
- PRIMARY & INTERMED. NAVAL FLIGHT OFFICER
- ADVANCED NAVAL FLIGHT OFFICER STRIKE
- ADVANCED NAVAL FLIGHT OFFICER PANEL

*** Air Force Only**

MEASURES OF MERIT (13)

- MANAGED TRAINING AREAS
- *** WEATHER**
- *** AIRSPACE AND FLIGHT TRAINING AREAS**
- *** AIRFIELDS**
- *** GROUND TRAINING FACILITIES**
- *** AIRCRAFT MAINTENANCE FACILITIES**
- SPECIAL MILITARY FACILITIES
- PROXIMITY TO TRAINING AREAS
- PROXIMITY TO OTHER SUPPORT FACILITIES
- UNIQUE FEATURES
- AIR QUALITY
- *** ENCROACHMENT**
- SERVICES

*** Utilized in Staff Analysis**

AF-104

BERGSTROM ARB DECISIONS
CATEGORY: AIR FORCE RESERVE (F-16) BASES

1991 COMMISSION REPORT:

> **"Therefore, the Commission recommends that Bergstrom Air Force Base close and that the assigned RF-4 aircraft retire...The Air Force Reserve units shall remain in a cantonment area if the base is converted to a civilian airport. If no decision on a civilian airport is reached by June 1993, the Reserve units will be redistributed."**

1993 COMMISSION REPORT:

> **"Therefore, the Commission recommends the following: Bergstrom cantonment area will remain open and the 704th Fighter Squadron (AFRES) with its F-16 aircraft and the 924th Fighter Group (AFRES) support units remain at the Bergstrom cantonment area until at least the end of 1996."**

AF-105

BERGSTROM ARB COMMUNITY ISSUES
CATEGORY: AIR FORCE RESERVE (F-16)

COMMITMENTS

- US GOVERNMENT
- '91 AND '93 COMMISSIONS
- CITY OF AUSTIN

ANNUAL SAVINGS INFLATED

- AIR FORCE COBRA: $19.0 M
  - ASSUMES FY 94 COSTS ARE STEADY STATE
  - REMEDIATION DELAYS
- STAFF ANALYSIS: $14.1 M
  - AUSTIN ASSUMES RESPONSIBILITY FOR AIRPORT (SEP 96)
  - ARB MOVES INTO CANTONMENT AREA (90% LAND AREA REDUCTION)
  - BOS/PERSONNEL REDUCTIONS

MILITARY VALUE

- CONSTRUCTED AS SAC BASE
  - RAMP AND HANGAR SPACE ADEQUATE FOR ONE KC-135 AND TWO F-16 SQUADRONS
  - 12,000 X 300 FT RUNWAY (2ND RUNWAY PLANNED)
- JOINT TRAINING ENHANCED: PROXIMITY TO FORT HOOD
- UNENCROACHED AIRFIELD

AF-10L

BASE ANALYSIS
CATEGORY: AIR FORCE RESERVE (F-16)

MAJOR ISSUES	BERGSTROM, TX (C)	HOMESTEAD, FL (R) *(*)*	CARSWELL, TX *(*)*
COMMITMENTS	1993 Retention of Reserve	1993 Retention of Reserve	N/A
INFLATED SAVINGS	Yes	N/A	N/A
20-YEAR NPV ($ M)	256.9	228.6	177.9
MANNING	99.6%	90.3%	95.1%
GROUND ENCROACHMENT INCOMPATIBILITY	0%	29%	33% - 50%

(C) = DoD recommendation for closure
(R) = DoD recommendation for realignment
(*) = *Candidate for* further *consideration*

AF_107

BASE ANALYSIS
CATEGORY: AIR FORCE RESERVE (C-130)

MAJOR ISSUES	PITTSBURGH, PA (C)	GEN MITCHELL, WI (*)	MINNEAPOLIS-ST. PAUL, MN (*)
LEVEL PLAY COBRA INACCURATE	No	Yes	Yes
Base Operating Budget ($M)	5.7	3.2	5.7
20-YEAR NPV - LEVEL PLAY			
Air Force Initial Report ($M)	137.0	125.0	119.0
Air Force Revised ($ M)	92.0	N/A	N/A
EXPANSION CAPABILITY	Yes	Yes	Yes

(C) = DoD recommendation for closure
(*) = Candidate for further consideration

AF-100

BASE ANALYSIS
CATEGORY: AIR FORCE RESERVE (C-130)

MAJOR ISSUES	NIAGARA FALLS, NY (*)	O'HARE, IL (*)	YOUNGSTOWN-WARREN, OH (*)
LEVEL PLAY COBRA INACCURATE	No	No	Yes
Operating Budget ($M)	5.7	5.7	1.9
20-YEAR NPV - LEVEL PLAY			
Air Force Initial Report ($M)	123.0	153.0	107.0
Air Force Revised ($M)	135.0	129.0	N/A
EXPANSION CAPABILITY	Yes	Yes	No

(*) = Candidate for further consideration

BACKUP SLIDES II

SLIDE	CONTENTS
AF-201.	Large Aircraft Bases: Force Structure (PAA)
AF-202.	Base Analysis: Large Aircraft Category (Ellsworth, Scott AFBs)
AF-203.	Base Analysis: Large Aircraft Category (Ellsworth, Scott, McGuire AFBs)
AF-204.	Northern Tier Missile Base Realignment/Closure Options
AF-205.	Aircraft Transfer Options: Small Aircraft Category
AF-206.	Lubbock Community Concerns
AF-207.	Base Analysis: Undergraduate Pilot Training Bases
AF-208.	Base Analysis: Undergraduate Pilot Training Bases (Reese, Randolph, Sheppard)
AF-209.	Staff Analysis I: Undergraduate Pilot Training Bases
AF-210.	Staff Analysis II: Undergraduate Pilot Training Bases
AF-211.	Installation Characteristics: Undergraduate Pilot Training Bases
AF-212.	Base Analysis: Air Force Reserve (F-16), Closure and Relocation
AF-213.	Plattsburgh Air Force Base
AF-214.	March Air Force Base
AF-215.	Newark Air Force Base
AF-216.	Vol. V Chart - Large Aircraft/Missiles - Tiering (Nov 3)
AF-217.	Vol. V Chart - Large Aircraft/Missiles - Tiering
AF-218.	Vol. V Chart - Small Aircraft - Tiering (Oct 25)
AF-219.	Vol. V Chart - Small Aircraft - Tiering
AF-220.	Vol. V Chart - Undergraduate Flying Training - Tiering (Oct 18)
AF-221.	Vol. V Chart - Undergraduate Flying Training - Tiering
AF-222.	Vol. V Chart - Depot - Tiering (Sep 13)
AF-223.	Vol. V Chart - Depot - Tiering
AF-224.	Vol. V Chart - Product Centers/Laboratories - Tiering (Oct 20)
AF-225.	Vol. V Chart - Product Centers/Laboratories - Tiering
AF-226.	Vol. V Chart - Air Force Reserve - Overall
AF-227.	Receiver Demand v. Total Tanker Basing Map

LARGE AIRCRAFT BASES
FORCE STRUCTURE (PAA)

INSTALLATION	AIRCRAFT TYPE	TOTAL
ALTUS AFB, OK	24 KC-135; 6 C-141; 6 C-5; 6 C-17	42
ANDERSEN AFB, GU	None	0
ANDREWS AFB, MD	Various (10) Types	80
BARKSDALE AFB, LA	44 B-52;18 A/OA-10	62
BEALE AFB, CA	34 U-2; 8 KC-135	CLASSIFIED
CHARLESTON AFB, SC	16 C-141; 24 C-17	40
DOVER AFB, DE	32 C-5	32
DYESS AFB, TX	24 C-130; 24 B-1	48
ELLSWORTH AFB, SD	12 B-1	12
FAIRCHILD AFB, WA	69 KC-135	69
GRAND FORKS AFB, ND	48 KC-135	48
HICKAM AFB, HI	8 KC-135; 4 C-130; 15 F-15; 2 C-135	29
LITTLE ROCK AFB, AR	76 C-130	76
MALMSTROM AFB, MT	12 KC-135	12
McCHORD AFB, WA	48 C-141; 12 A-10	60
McCONNELL AFB, KS	10 B-1; 48 KC-135	58
McGUIRE AFB, NJ	19 KC-135; 24 KC-10; 27 C-141	70
MINOT AFB, ND	12 B-52	12
OFFUTT AFB, NE	32 C-135; 6 C-21	38
SCOTT AFB, IL	11 C-9; 8 C-21	19
TRAVIS AFB, CA	24 KC-10; 16 C-141; 32 C-5	72
WHITEMAN AFB, MO	10 B-2; 18 A-10	28

AF-201

BASE ANALYSIS
CATEGORY: LARGE AIRCRAFT

DOD RECOMMENDATION: Realign Malmstrom AFB tanker resources to MacDill AFB, FL and close airfield operations except for required helicopter support.
FOR CONSIDERATION: Study Ellsworth and Scott AFBs **FOR CLOSURE.**

CRITERIA	ELLSWORTH, SD *(*)* (Closure)	SCOTT, IL *(*)* (Closure)
AIR FORCE TIERING	III	III
BCEG RANK	17/18	16/18
FORCE STRUCTURE	12 B-1 Aircraft	12 C-9 & 8 C-21 Aircraft
ONE-TIME COSTS ($ M)	41.3	241.2
ANNUAL SAVINGS ($ M)	60.9	51.3
RETURN ON INVESTMENT ($ M)	1 Year	5 Years
BASE OPERATING BUDGET ($ M)	25.8	30.9
PERSONNEL ELIMINATED (MIL/CIV) PERSONNEL REALIGNMENT (MIL/CIV)	1,055/202 2,073/178	750/352 5,322/2,366
ECONOMIC IMPACT (BRAC95/CUM)	8.8%	1.1%
ENVIRONMENTAL	Attainment	Non-Attainment Ozone Moderate

(C) = DoD recommendation for closure
(R) = DoD recommendation for realignment
(*) = Candidate for further consideration
** Lower costs if active force structure realigns to Plattsburgh AFB vice Dover and Charleston AFBs as depicted by the level playing field COBRA

BASE ANALYSIS
CATEGORY: LARGE AIRCRAFT

DOD RECOMMENDATION: Realign Malmstrom AFB tanker resources to MacDill AFB, FL and close airfield operations except for required helicopter support.

FOR CONSIDERATION: Study Ellsworth and Scott AFBs **FOR CLOSURE.** Further, study McGuire AFB **FOR REALIGNMENT.**

CRITERIA	ELLSWORTH, SD *(*)* (Closure)	SCOTT, IL *(*)* (Closure)	MCGUIRE, NJ *(*)* (Realign)
AIR FORCE TIERING	III	III	II
BCEG RANK	17/18	16/18	11/18
FORCE STRUCTURE	12 B-1 Aircraft	12 C-9 & 8 C-21 Aircraft	27 C-141, 24 KC-10, 19 KC-135 (ANG)
ONE-TIME COSTS ($ M)	41.3	241.2	626.0**
ANNUAL SAVINGS ($ M)	60.9	51.3	64.0
RETURN ON INVESTMENT	1 Year	5 Years	11 Years
BASE OPERATING BUDGET ($ M)	25.8	30.9	33.9
PERSONNEL ELIMINATED (MIL/CIV) PERSONNEL REALIGNMENT (MIL/CIV)	1,055/202 2,073/178	750/352 5,322/2,366	799/278 4,425/1,218
ECONOMIC IMPACT (BRAC95/CUM)	8.8%	1.1%	0.4%
ENVIRONMENTAL	Attainment	Non-Attainment Ozone Moderate	Non-Attainment Ozone Severe

(C) = DoD recommendation for closure
(R) = DoD recommendation for realignment
(*) = Candidate for further consideration
** Lower costs if active force structure realigns to Plattsburgh AFB vice Dover and Charleston AFBs as depicted by the level playing field COBRA

AF-703

NORTHERN TIER MISSILE BASE REALIGNMENT/CLOSURE OPTIONS

OPTIONS	ONE-TIME COST	ANNUAL RECURRING SAVINGS	NET PRESENT VALUE	ECONOMIC IMPACT
REALIGN GRAND FORKS MSLS AND MALMSTROM ACFT	$29.3M	$40.3M	$501.3M	2.4% - Grand Forks 3.0% - Great Falls
REALIGN MINOT MSLS AND MALMSTROM ACFT	$29.4M	$41.1M	$512.9	3.1% - Minot 3.0% - Great Falls
REALIGN FE WARREN MSLS AND MALMSTROM ACFT	$101.7M	$21.2M	$181.1M	1.4% - Cheyenne 3.0% - Great Falls
CLOSE GRAND FORKS	$81.4M	$87.6M	$1,088M	12.7% - Grand Forks
CLOSE MALMSTROM	$96.4M	$113.9M	$1,378M	9.3% - Great Falls
CLOSE MINOT AND REALIGN MALMSTROM ACFT	$247.8M	$103.3M	$1,120.4M	15.8% - Minot 3.0% - Great Falls

AF-204

CATEGORY: SMALL AIRCRAFT
AIRCRAFT TRANSFER OPTIONS

CLOSURE BASE	RECEIVER BASES			
CANNON	SHAW 54 F-16 (B 50) 24 A/OA-10	MOODY 36 F-16 (B 40L) 24 A/OA-10 8 C-130	HILL 54 F-16 (B 40L) 15 F-16 (B 30/AFR)	NELLIS Fighter Weapons CTR Red Flag
- 18 F-16 (B 50) - 36 F-16 (B 30) - 24 EF-111	+ 18 F-16 (B 50)	+ 36 F-16 (B 30) - 36 F-16 (B 40L)	+ 36 F-16 (B 40L)	+ 24 EF-111
MOODY	HILL 54 F-16 (B 40L) 15 F-16 (B 30/AFR)	CANNON 18 F-16 (B 50) 36 F-16 (B 30) 6 EF-111 25 F-111	SHAW 54 F-16 (B 50) 24 A/OA-10	McCHORD 48 C-141 LITTLE ROCK 76 C-130
- 36 F-16 (B 40L) - 24 A/OA-10 - 8 C-130	+ 18 F-16 (B 40L)	+ 18 F-16 (B 40L) - 18 F-16 (B 50)	+ 18 F-16 (B 50)	+ 24 A/OA-10 (MC) + 8 C-130 (LR)
TYNDALL NORAD OPS CTR DRONE OPS	EGLIN 54 F-15C	LANGLEY 54 F-15C	NELLIS Fighter Weapons CTR Red Flag	
- 72 F-15 (Training) - Weapons Eval Group	+ 72 F-15 (Training) + Weapons Eval Gp - 54 F-15C	+ 18 F-15C	+ 36 F-15C	

AF-205

LUBBOCK COMMUNITY CONCERNS

- **REASONS TO REJECT AIR FORCE DECISION AND CONSIDER OTHER BASES FOR CLOSURE:**
  - AIR FORCE ACKNOWLEDGED DATA/CALCULATION ERRORS:
    - SHORT CHANGED REESE AIRSPACE BY 10,000 CUBIC NAUTICAL MILES
    - REPORTED 55% FEWER MILITARY TRAINING ROUTES (MTRs) FOR REESE THAN NAUTICAL
    - PERCENT ADEQUATE PAVEMENT 10% GREATER THAN REPORTED
  - MODELING ERRORS:
    - ERRORS IN MODEL FORMULAS
    - REESE'S ALERT AREA NOT CONSIDERED
    - OUTLYING INSTRUMENT AIRFIELD (LUBBOCK INTERNATIONAL AIRPORT) NOT CONSIDERED
    - REESE'S OTHER PRIMARY OUTLYING FIELDS NOT CONSIDERED
  - AIR FORCE AND NAVY TOOK ENTIRELY DIFFERENT APPROACHES TO EVALUATING MILITARY VALUE OF UPT BASES -- THIS ISSUE ALONE CONSTITUTES A SIGNIFICANT DEVIATION:
- **REASONS TO TAKE REESE OFF THE LIST:**
  - MILITARY VALUE SUPERIOR TO OTHER BASES
  - BETTER QUALITY OF LIFE THAN OTHER BASES
  - COST EFFECTIVE, LOWEST COST PER FLYING HOUR, SECOND LOWEST COST PER STUDENT
  - LUBBOCK COMMUNITY IN CONCERT WITH REESE:
    - SAVES THE AIR FORCE OVER $1M ANNUALLY IN MEDICAL COSTS

CAN SAVE THE AIR FORCE OVER $6M IN ONE TIME COSTS AND MILLIONS OF DOLLARS ANNUALLY WITH THEIR OTHER COST SAVING PROPOSALS

BASE ANALYSIS
CATEGORY: UNDERGRADUATE PILOT TRAINING (UPT)

DOD RECOMMENDATION: Close Reese, Inactivate 64th Flying Training Wing, Relocate/Retire other assigned aircraft.
FOR CONSIDERATION: Study Columbus, Laughlin and Vance **FOR CLOSURE** and Randolph **FOR REALIGNMENT**.

ISSUES	REESE, TX (C) (X)	COLUMBUS, MS (*)	LAUGHLIN, TX (*)	RANDOLPH, TX (*)	VANCE, OK (*) (X)
AIR FORCE TIERING	III	I	I	I	I
BCEG RANK	5/5	2/5	3/5	1/5	3/5
FUNCTIONAL VALUE: AF/JCSG	6.22 (Red)	6.74 (Green)	6.50 (Yellow+)	6.53 (Green-)	6.67 (Green)
FUNCTIONAL VALUE: Staff I	6.4	7.2	7.8	5.3	6.7
FUNCTIONAL VALUE: Staff II	6.3	6.4	7.4	4.4	6.3
FORCE STRUCTURE	21 T-1A 48 T-37B 51 T-38	45 T-37B 57 T-38/21 AT-38	21 T-1A 48 T-37B 51 T-38	15 T-1A 57 T-37B 57 T-38/8 AT-38 10 T-43 6 C-21A	46 T-37B 69 T-38
ONE-TIME COSTS ($ M)	15.8	18.2	25.9	205.2	14.7
ANNUAL SAVINGS ($ M)	19.7	25.3	21.6	18.0	19.5
RETURN ON INVEST	1 Year	1 Year	2 Years	15 Years	1 Year
BASE OPERATING BUDGET ($ M)	21.0	26.3	23.7	21.1	26.3
PERSONNEL ELIM (Mil/Civ) PERSONNEL RLNG (Mil/Civ)	209/ 0 691/245	315/ 0 750/252	282/101 749/644	447/397 3,876/2,740	202/ 0 645/208
ECONOMIC IMPACT (BRAC95/CUM)	1.2% / 1.2%	.6.3% / 6.3%	18.8% / 18.8%	0.2% / 8.3%	11.0% / 11.0%
ENVIRONMENTAL	Siting	Asbestos	Asbestos	Asbestos , Siting, Water	Asbestos

(C) = DoD recommendation for closure

(X) = Joint Cross-Service Group option for closure

(*) = Candidate for further consideration

AF-207

BASE ANALYSIS
CATEGORY: UNDERGRADUATE PILOT TRAINING (UPT)

CRITERIA	REESE, TX (C) (Closure)	RANDOLPH, TX (*) (Realign)	SHEPPARD, TX
AIR FORCE TIERING	III	I	I
BCEG RANK	5/5	1/5	Excluded
FUNCTIONAL VALUES (AF/JCSG)	6.22	6.53	Excluded
FUNCTIONAL VALUES (Staff I)	6.64	7.12	Excluded
FUNCTIONAL VALUES (Staff II)	6.5	5.2	Excluded
FORCE STRUCTURE	21 T-1A 48 T-37B 51 T-38	15 T-1A 57 T-37B 57 T-38 / 8 AT-38 10 T-43A	36 T-37B 31 T-38 / 8 AT-38
ONE-TIME COSTS ($ M)	15.8	205.2	TBD
ANNUAL SAVINGS ($ M)	19.7	18.0	TBD
RETURN ON INVEST	1 Year	15 Years	TBD
BASE OPERATING BUDGET ($ M)	21.0	21.1	33.7
PERSONNEL ELIMINATED (MIL/CIV) PERSONNEL REALIGNMENT(MIL / CIV)	209/0 691/245	447/397 3,876/2,740	TBD
ECONOMIC IMPACT (BRAC95/CUM)	1.2%/1.2%	0.2%/0.2%	TBD
ENVIRONMENTAL	Siting	Asbestos, Siting, Water	TBD

(C) = DoD recommendation for closure
(R) = DoD recommendation for realignment
(*) = *Candidate for further consideration*

AF-208

CATEGORY: UNDERGRADUATE PILOT TRAINING (UPT)
STAFF ANALYSIS-I
REVISE WEIGHTINGS OF MEASURES OF MERIT

UPT-JCSG MEASURES OF MERIT	STAFF WEIGHT	REESE (C) (X) Closure	COLUMBUS (*) Closure	LAUGHLIN (*) Closure	RANDOLPH (*) Realignment	VANCE (*) (X) Closure
WEATHER	30	4.7	5.4	7.4	6.0	5.3
AIRSPACE	20	4.8	6.9	7.1	7.0	6.4
ENCROACHMENT	20	8.6	8.9	10.0	0.0	6.9
AIRFIELDS	15	8.2	8.9	7.7	6.0	9.2
MAINTENANCE FACILITIES	10	7.0	7.1	6.4	7.4	6.6
GROUND TRNG FACILITIES	5	7.9	7.4	7.3	8.6	7.8
TOTAL:	100	6.4	7.2	7.8	5.3	6.7
RANK:		4	2	1	5	3

UNWEIGHTED	SCORE	6.87	7.43	7.65	6.72	7.03
AVERAGE	RANK	4	2	1	5	3

(C) = DoD recommendation for closure
(X) = Joint Cross-Service Group option for closure
(*) = *Candidate for further consideration*

CATEGORY: UNDERGRADUATE PILOT TRAINING (UPT)
STAFF ANALYSIS -II
CORRECT DATA

UPT-JCSG MEASURES OF MERIT	STAFF WEIGHT	REESE (C) (X) Closure	COLUMBUS (*) Closure	LAUGHLIN (*) Closure	RANDOLPH (*) Realignment	VANCE (*) (X) Closure
WEATHER	30	4.7	4.7	7.0	5.8	4.3
AIRSPACE	20	4.1	4.0	5.7	2.8	6.0
ENCROACHMENT	20	8.6	8.9	10.0	0.0	6.9
AIRFIELDS	15	8.2	8.9	7.7	6.0	9.2
MAINTENANCE FACILITIES	10	7.0	7.1	6.4	7.4	6.6
GROUND TRNG FACILITIES	5	7.9	7.4	7.3	8.6	7.8
TOTAL:	100	6.3	6.4	7.4	4.4	6.3
RANK:		3	2	1	5	3

UNWEIGHTED	SCORE	6.75	6.83	7.35	5.10	6.80
AVERAGE	RANK	4	2	1	5	3

(C) = DoD recommendation for closure
(X) = Joint Cross-Service Group option for closure
(*) = *Candidate for further consideration*

AP-210

CATEGORY: UNDERGRADUATE PILOT TRAINING (UPT) INSTALLATION CHARACTERISTICS

COLUMBUS

- BEST UPT BASE FOR BOMBER/FIGHTER TRAINING
  - LOW PRESSURE ALTITUDE
  - LONG RUNWAY
  - READY ACCESS TO AIR-TO-GROUND GUNNERY RANGE
  - ADVANCED STUDENTS HAVE INSTRUMENT RATING
- FORMER SAC BASE--MISSION FLEXIBILITY

LAUGHLIN

- BEST UPT BASE FOR PRIMARY TRAINING
  - BEST FLYING WEATHER
  - UNENCROACHED AIRFIELDS
  - UNLIMITED AIRSPACE POTENTIAL
- FORMER SAC BASE--MISSION FLEXIBILITY

VANCE

- SIMILAR LAYOUT TO REESE
- WELL-SUITED FOR PRIMARY AND AIRLIFT/TANKER TRAINING
  - BEST AIRSPACE AND LOW ALTITUDE TRAINING ROUTE STRUCTURE
  - CROSSWIND RUNWAY CONFIGURATION
- LOW AND MEDIUM ALTITUDE OPERATIONS MINIMIZE ICING IMPACTS

AF-211

BASE ANALYSIS
CATEGORY: AIR FORCE RESERVE (F-16)

DOD RECOMMENDATION: Close Bergstrom, relocate 10th Air Force to Carswell ARB (NAS Fort Worth).
FOR CONSIDERATION: Study Homestead and Carswell **FOR CLOSURE** and **RELOCATION** of AFRES units.

CRITERIA	BERGSTROM, TX (C) Closure	HOMESTEAD, FL (R) (*) Closure and Relocation (MacDill)	CARSWELL, TX (*) Closure and Relocation (Bergstrom)
AIR FORCE TIERING	N/A	N/A	N/A
BCEG RANK	N/A	N/A	N/A
FORCE STRUCTURE	15 F-16C/D	15 F-16A/B	18 F-16C/D
ONE-TIME COSTS ($ M)	13.0	24.2	18.5
ANNUAL SAVINGS ($ M)	18.4	8.0	10.1
RETURN ON INVESTMENT	Immediate	4 Years	2 Years
BASE OPERATING BUDGET ($ M)	9.2	9.1	5.4
PERSONNEL ELIMINATED (MIL/CIV)	0/263	0/0	0/169
PERSONNEL REALIGNMENT (MIL/CIV)	0/94	0/584	0/260
ECONOMIC IMPACT (BRAC95/CUM)	0.1%/0.3%	0.1%/0.1%	0.1%/0.1%
ENVIRONMENTAL	None	Asbestos/Flood Plain	None

(C) = DoD recommendation for closure
(R) = DoD recommendation for realignment
(*) = Candidate for further consideration

PLATTSBURGH AIR FORCE BASE

- 1993 Base Closure Commission found substantial deviation by the Secretary of Defense and closed Plattsburgh AFB, NY which had been selected by the Secretary of the Air Force as the East Coast Mobility Base. Instead, the Commission retained McGuire AFB, NJ and recommended the East Coast Mobility Base be established at McGuire.
    - One Time Cost to Close: $131.2M
    - Annual Savings: $ 56.6M

- The Plattsburgh community filed a lawsuit in December, 1993 and subsequent restraining order the following April, challenging the Commission recommendation. The suit was dropped following the unanimous Supreme Court decision on Philadelphia Naval Shipyard challenge.

- Commission has received numerous community requests to reconsider Plattsburgh as a Redirect/Reopening. These requests have come to the Commission ever since the July 1, 1993 report but have increased in the last few months.

- DoD has not forwarded any recommendation to the Commission concerning Plattsburgh AFB. General Ronald Fogleman, Air Force Chief of Staff, testified that the Air Force took the necessary action to place the mobility wing force structure into McGuire AFB, that the mobility wing in fact stood up in support of 1994 contingencies and that the Air Force was satisfied with the progress.

    - Plattsburgh AFB is scheduled to close on September 30, 1995
    - There is no force structure assigned to Plattsburgh

AF-213

MARCH AIR FORCE BASE, CA

- 1993 Defense Base Closure and Realignment Commission realigned March
  - Active force structure relocated to Travis AFB, CA
  - Base realigned as a Reserve Component installation

- Community has proposed realignment of Marine Corps helicopter units from El Toro and Tustin Marine Corps Air Stations as more cost effective than 1993 decision
  - 1993 Commission closed El Toro and Tustin and realigned force structure to NAS Miramar and Camp Pendleton at a cost of $936.6M
  - Community suggests a savings of approximately $326.0M by moving to March

- Air Force position is Marines would have to assume ownership and fiscal and management responsibilities for the base and become host to Reserve units
  - Navy adamantly opposed to **opening** a base in the face of other base closures/infrastructure reductions

- Navy has submitted a redirect of their 93 recommendation realigning their force structure at Miramar thus reducing the original MILCON cost estimates for Marine Corps move from El Toro

  New data not considered by the community

RF-214

NEWARK AIR FORCE BASE

- 1993 Base Closure Commission validated the DoD recommendation to close Newark AFB.
  - One Time Cost to Close: $31.3M
  - Annual Savings: $ 3.8M

- December 1994 - GAO Report on Newark recommended review of the decision to close Newark
  - Air Force base closure group validated closure costs increased to $62.2M
  - The $3.8M annual savings will not be realized

- March 1995 - AF evaluated numerous options that would (1) relocate Newark AFB functions to other depots or (2) privatize the work
  - (1) AF estimated cost of $309.2M to relocate the Newark workload to other depots resulting in:
    - One Time Cost to Close: $371.4M
    - Annual Savings: $ 9.6M
  - (2) AF estimated cost of $723.5M from FY96 - FY00 to privatize the workload resulting in:
    - One Time Cost to Close: $62.2M
    - Annual **Costs**: $63.2M

- April 1995 - Coopers & Lybrand evaluated both AF estimates:
  - (1) Coopers & Lybrand estimated a range of $147.6M to $430.1M to relocate the workload
  - (2) Coopers & Lybrand estimated a range of $588.8M to $828.4M to privatize the workload

- May 1995 - AF published a request for pro
- posals to perform the Newark workload due back to the Air Force on June 17, 1995. If the contractor proposals to perform the work at Newark are still significantly higher than previously calculated, the AF may ask the 1995 Commission to consider reopening Newark.

AF-215

OPERATIONS - LARGE AIRCRAFT and MISSILES Subcategories

ANALYSIS RESULTS at TIERING (3 Nov)

The following grades and data reflect the information on which the BCEG members based their tiering determination. Information in this chart was updated as the result of a number of factors between initial tiering and final recommendations.

Base Name	I.1 Mission (Flying) Requirements	I.2 Mission (Missile) Requirements	II Facilities and Infrastructure	III Contingency and Mobility	IV Costs and Manpower Implications	V Return on Investment	VI Economic Impact	VII Community	VIII Environmental Impact
Altus AFB	Green	No Grade	Green -	Green -	433/ 18	20	4,392 (43.9%)	Yellow	Green -
Barksdale AFB	Green -	No Grade	Green -	Green -	221/-378	5	9,963 (7.0%)	Green -	Yellow
Beale AFB	Green	No Grade	Yellow +	Green -	199/-567	3	4,795 (10.0%)	Yellow	Yellow +
Charleston AFB	Green -	No Grade	Yellow +	Green -	423/-100	14	34,210 (14.9%)*	Yellow +	Yellow +
Dover AFB	Green	No Grade	Yellow	Green -	322/-314	8	8,215 (13.1%)	Green -	Red +
Dyess AFB	Green -	No Grade	Green -	Green -	132/-443	3	6,983 (12.7%)	Green -	Green -
Ellsworth AFB	Yellow +	No Grade	Green	Green -	41/-849	1	6,427 (12.6%)	Green -	Yellow
Fairchild AFB	Green -	No Grade	Green -	Green -	300/-306	8	7,850 (4.5%)	Yellow +	Yellow +
Grand Forks AFB	Yellow +	Red	Green -	Yellow +	129/-731	2	7,054 (16.7%)	Yellow +	Yellow +
Little Rock AFB	Green -	No Grade	Green -	Green -	328/-347	8	7,798 (2.9%)	Yellow +	Yellow +
Malmstrom AFB	Green -	Green	Green -	Yellow	32/-797	1	6,722 (19.4%)	Yellow +	Green -
McConnell AFB	Green -	No Grade	Green -	Green -	224/-347	6	5,760 (2.3%)	Green -	Yellow +
McGuire AFB	Green	No Grade	Yellow +	Green -	624/-386	10	32,627 (1.4%)*	Yellow +	Yellow
Minot AFB	Green -	Yellow	Green -	Yellow +	59/-801	1	7,320 (29.7%)	Green -	Green -
Offutt AFB	Yellow +	No Grade	Green	Yellow +	515/-151	13	16,085 (4.8%)	Green -	Yellow +
Scott AFB	Yellow	No Grade	Yellow +	Yellow	240/-528	5	16,245 (1.4%)	Yellow +	Yellow +
Travis AFB	Green	No Grade	Yellow	Green -	846/-207	14	31,570 (14.8%)*	Yellow +	Yellow
Whiteman AFB	Green -	No Grade	Green -	Yellow +	326/-383	7	4,551 (12.3%)	Yellow +	Green -

OPERATIONS - LARGE AIRCRAFT and MISSILES Subcategories

TIERING OF BASES

As an intermediate step in the Air Force Process, the BCEG members established the following tiering of bases based on the relative merit of bases within the subcategory as measured using the eight selection criteria. Tier I represents the highest relative merit,

TIER I

Altus AFB
Barksdale AFB
Charleston AFB
Dover AFB
Dyess AFB
Fairchild AFB
Little Rock AFB
McConnell AFB
Travis AFB
Whiteman AFB

TIER II

Beale AFB
Malmstrom AFB
McGuire AFB
Minot AFB
Offutt AFB

TIER III

Ellsworth AFB
Grand Forks AFB
Scott AFB

BE-217

OPERATIONS - SMALL AIRCRAFT Subcategory

ANALYSIS RESULTS at TIERING (25 Oct)

The following grades and data reflect the information on which the BCEG members based their tiering determination. Information in this chart was updated as the result of a number of factors between initial tiering and final recommendations.

Base Name	I.1 Mission (Flying) Requirements	II Facilities and Infrastructure	III Contingency and Mobility	IV Costs and Manpower Implications	V Return on Investment	VI Economic Impact	VII Community	VIII Environmental Impact
Cannon AFB	Yellow	Green -	Yellow +	73/-502	2	7,479 (31.5%)	Yellow -	Yellow +
Davis-Monthan AFB	Green -	Green -	Green -	360/-16	17	9,746 (3.1%)	Yellow +	Yellow +
Holloman AFB	Yellow +	Green -	Green -	257/-633	4	8,625 (47.5%)	Yellow	Yellow -
Hurlburt Fld	Green -	Green -	Yellow +	129/-400	4	9,381 (14.4%)	Green -	Yellow
Langley AFB	Green -	Green -	Yellow +	294/-517	5	16,372 (2.5%)*	Green -	Yellow
Luke AFB	Green -	Yellow	Yellow	180/-343	5	11,002 (1.0%)	Yellow +	Yellow +
Moody AFB	Green -	Green -	Yellow +	98/-438	2	5,477 (16.1%)	Yellow +	Yellow +
Mt Home AFB	Yellow +	Green -	Green -	245/-414	5	5,269 (69.7%)	Yellow	Yellow
Seymour Johnson AFB	Green -	Green -	Green -	179/-462	4	7,452 (17.5%)	Yellow	Yellow +
Shaw AFB	Green -	Green -	Yellow +	194/-513	4	7,852 (19.5%)	Yellow +	Yellow +
Tyndall AFB	Green -	Green -	Yellow +	179/-373	5	7,503 (13.0%)	Yellow	Yellow +

OPERATIONS - SMALL AIRCRAFT Subcategory

TIERING OF BASES

As an intermediate step in the Air Force Process, the BCEG members established the following tiering of bases based on the relative merit of bases within the subcategory as measured using the eight selection criteria. Tier I represents the highest relative merit,

TIER I
Davis-Monthan AFB
Langley AFB
TIER II
Hurlburt Fld
Luke AFB
Mt Home AFB
Seymour Johnson AFB
Shaw AFB
Tyndall AFB
TIER III
Cannon AFB
Holloman AFB
Moody AFB

UNDERGRADUATE FLYING TRAINING

ANALYSIS RESULTS at TIERING (18 Oct)

The following grades and data reflect the information on which the BCEG members based their tiering determination. Information in this chart was updated as the result of a number of factors between initial tiering and final recommendations.

Base Name	I.1 Mission (Flying) Requirements	II Facilities and Infrastructure	III Contingency and Mobility	IV Costs and Manpower Implications	V Return on Investment	VI Economic Impact	VII Community	VIII Environmental Impact
Columbus AFB	Green	Green	Yellow	17/-333	1	3,423 (8.4%)	Yellow +	Yellow
Laughlin AFB	Yellow +	Green -	Yellow -	25/-275	2	4,115 (27.1%)	Yellow	Yellow +
Randolph AFB	Green -	Green -	Yellow	204/-59	13	12,579 (2.0%)	Green -	Yellow -
Reese AFB	Red	Green -	Yellow -	15/-259	1	3,446 (3.1%)	Green -	Yellow
Vance AFB	Green	Green -	Yellow -	14/-254	1	3,040 (11.6%)	Green -	Yellow +

UNDERGRADUATE FLYING TRAINING

TIERING OF BASES

As an intermediate step in the Air Force Process, the BCEG members established the following tiering of bases based on the relative merit of bases within the subcategory as measured using the eight selection criteria. Tier I represents the highest relative merit,

TIER I
Columbus AFB
Laughlin AFB
Randolph AFB
Vance AFB
TIER III
Reese AFB

INDUSTRIAL/TECHNICAL SUPPORT - DEPOT Subcategory

ANALYSIS RESULTS at TIERING (13 Sep)

The following grades and data reflect the information on which the BCEG members based their tiering determination. Information in this chart was updated as the result of a number of factors between initial tiering and final recommendations.

Base Name	I.3 Satellite Control Operations	II Facilities and Infrastructure	III Contingency and Mobility	IV Costs and Manpower Implications	V Return on Investment	VI Economic Impact	VII Community	VIII Environmental Impact
Hill AFB	Green -	Yellow +	Green -	1,409/ 514	30	38,748 (6.8%)	Green -	Yellow +
Kelly AFB	Yellow	Green -	Yellow +	653/-179	10	41,125 (6.4%)	Green -	Red +
McClellan AFB	Yellow +	Yellow +	Yellow +	514/-607	5	32,438 (5.2%)*	Yellow	Yellow +
Robins AFB	Green -	Green -	Green	1,011/ 133	18	32,004 (24.3%)	Green -	Yellow +
Tinker AFB	Yellow +	Green -	Green	1,312/ 633	42	47,590 (10.1%)	Green -	Yellow +

RF-222

INDUSTRIAL/TECHNICAL SUPPORT - DEPOT Subcategory

TIERING OF BASES

As an intermediate step in the Air Force Process, the BCEG members established the following tiering of bases based on the relative merit of bases within the subcategory as measured using the eight selection criteria. Tier I represents the highest relative merit,

TIER I

Hill AFB
Tinker AFB

TIER II

Robins AFB

TIER III

Kelly AFB
McClellan AFB

AF-223

INDUSTRIAL/TECHNICAL SUPPORT - PRODUCT CENTERS and LABORATORIES Subcategory

ANALYSIS RESULTS at TIERING (20 Oct)

The following grades and data reflect the information on which the BCEG members based their tiering determination. Information in this chart was updated as the result of a number of factors between initial tiering and final recommendations.

Base Name	I.1 Flying Operations	I.5 Product Center/ Lab Evaluation	II Facilities and Infrastructure	III Contingency and Mobility	IV Costs and Manpower Implications	V Return on Investment	VI Economic Impact	VII Community	VIII Environmental Impact
Brooks AFB	Red	Yellow	Green -	Red +	246/-78	10	7,723 (1.2%)	Green -	Red +
Hanscom AFB	Red	Green -	Yellow +	Red +	421/-158	9	18,769 (1.0%)*	Green -	Yellow +
Kirtland AFB	Yellow +	Green -	Yellow +	Yellow	448/-469	6	20,364 (8.0%)	Green -	Green -
Los Angeles AFB	Red	Yellow +	Yellow	Red +	450/-142	10	22,935 (0.6%)*	Yellow	Green -
Rome Lab	Red	Yellow +	Green -	Red +	134/ 112	100+	10,931 (8.2%)*	Yellow +	Yellow +
Wright-Patterson AFB	Yellow +	Green -	Yellow +	Green -	1,567/ 834	49	52,399 (11.9%)	Green -	Yellow -

INDUSTRIAL/TECHNICAL SUPPORT - PRODUCT CENTERS and LABORATORIES Subcategory

TIERING OF BASES

As an intermediate step in the Air Force Process, the BCEG members established the following tiering of bases based on the relative merit of bases within the subcategory as measured using the eight selection criteria. Tier I represents the highest relative merit,

TIER I

Hanscom AFB
Rome Lab
Wright-Patterson AFB

TIER II

Kirtland AFB
Los Angeles AFB

TIER III

Brooks AFB

AIR RESERVE COMPONENT - AIR FORCE RESERVE Subcategory

OVERALL

Base Name	I.1 Mission (Flying) Requirements	II Facilities and Infrastructure	III Contingency and Mobility	IV Costs and Manpower Implications	V Return on Investment	VI Economic Impact	VII Community	VIII Environmental Impact
Bergstrom ARB	Yellow -	Yellow	Yellow +	34/-84	2	1,513 (0.3%)*	Green -	Green
Carswell AFB	Yellow	Yellow +	Yellow	26/ 55	Never	975 (0.1%)	Green -	Green
Dobbins ARB	Yellow +	Green -	Yellow	20/-110	3	10,774 (0.6%)	Green -	Green -
Gen Mitchell IAP ARS	Yellow +	Yellow	Yellow	13/-124	1	629 (0.1%)	Green -	Green -
Greater Pittsburgh IAP ARS	Green -	Yellow +	Yellow	14/-138	1	701 (0.1%)	Green -	Green -
Grissom AFB	Yellow +	Yellow +	Yellow	81/-161	5	3,757 (4.3%)*	Green -	Yellow +
Homestead ARB	Yellow +	Yellow +	Yellow	8/-194	0	693 (0.1%)*	Green -	Yellow
March ARB	Yellow +	Yellow	Green -	184/-212	7	18,772 (1.8%)*	Green -	Yellow -
Minneapolis-St Paul IAP ARS	Yellow +	Green -	Yellow -	14/-119	2	1,111 (0.1%)*	Green -	Yellow +
NAS Willow Grove ARS	Yellow +	Yellow	Yellow	12/-60	3	26,933 (1.0%)*	Green -	Green -
Niagara Falls IAP ARS	Yellow +	Yellow +	Yellow	14/ 115	1	1,039 (1.1%)*	Green -	Yellow +
O'Hare IAP, ARS	Green -	Yellow +	Yellow	14/-152	1	4,584 (0.1%)*	Green -	Green -
Westover ARB	Green -	Yellow	Green -	149/ 190	7	2,268 (0.8%)*	Green -	Yellow +
Youngstown-Warren MPT ARS	Yellow +	Yellow +	Yellow -	13/-107	2	1,193 (0.5%)	Green -	Green -
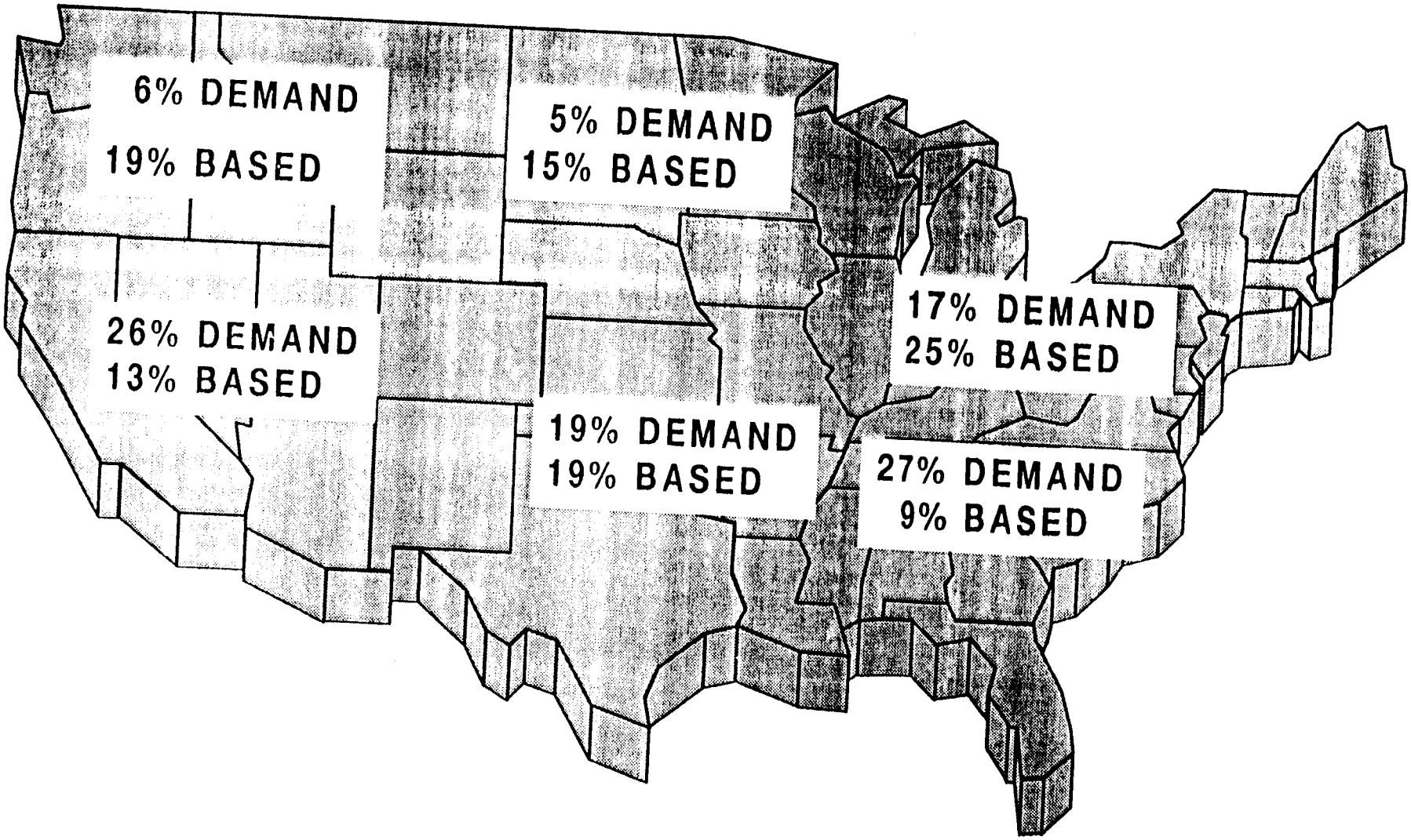
RECEIVER DEMAND VS TOTAL TANKER BASING