DCN 1375

DRAFT

USAF Baseline Lean Logistics Master Plan and Road Map

Version 3.0

Supplement
Lessons Learned and Checklist of Required Actions

31 January 1995

HQ USAF/LGM-2

DRAFT

Introduction

This Supplement to Version 3.0 of the Master Plan and Roadmap provides a set of "Lessons Learned" and Checklist of actions to be taken to implement Lean Logistics. At this time, the information provided here is based on the experiences of the B-1 Operational Readiness Assessment (ORA), the C-5 demonstration of Lean Logistics concepts, and the completion of Coronet Deuce III two-level maintenance activities for the F-16 aircraft.

The Lessons Learned and Checklist serve as a valuable tool for the continued implementation of Lean Logistics. New shop/weapon system implementation plans should review this information and adapt the information provided here to new initiatives, to speed the process of implementation and reduce the potential for problems to arise.

As more experience is gained in implementing Lean Logistics, additional Lessons Learned and more detail to the Checklist for implementation will be provided.

B-1 ORA[1]

Actions were taken at the base, depot, and MAJCOM level to improve the Missions Capability (MC) rate of the B-1 from 57% in FY93 to 66% during June-November 1994. The following actions serve as Lessons Learned for improving the operational capability of the B-1:

BASE:

1. Fully utilized express shipping
2. Eliminated test station MICAPs
3. Stabilized repair processes
4. Consolidated single hit aircraft MICAPs, resulting in fewer TNMCS hours
5. Reconciled CAMS/MASS for proper aircraft status reporting and parts requisitioning
6. Established cross-functional working groups, for
    - intermediate repair enhancement
    - avionics working group or shop team
    - base/depot software working group
7. Gained DO35 access, to monitor requisitions and depot asset posture
8. Aggressively managed AWP program, going MICAP for critical SRU/B&Ps

DEPOT:

1. Used "Express Table" to direct induct, saving 3-4 days processing time
2. Express shipped assets direct from the ICS contractor to the customer, with streamlined GBL procedures for ICS contractors
3. Better managed bench stock, with proper levels, accessible and ordered as required
4. Reviewed LRU and SRU production regularly
5. Used "DRIVE-like" system to prioritize repair and distribution, as a bridge to repairing on demand because demand patterns are not constant
6. Stored AWP and AWM LRUs in the maintenance shop to enhance cross-cannibalization capability
7. Advocate that item managers be weapon system based, not commodity based, so they can have visibility over SRUs that belong to specific LRUs

MAJCOM:

1. Advocate the creation of a customer support center when applicable
    - focal point for resource decision making
    - demonstrates the CLCC concept
2. Used DRIVE capabilities
    - set base levels and used DRIVE to maintain support levels with $5mil less inventory investment in the B-1
3. Developed retail/wholesale interface; bases and depots need total asset visibility

[1] Information taken from B-1 ORA Lessons Learned Briefing presented at the Lean Logistics 06-Steering Group meeting, January 18, 1995.

OTHER ACTIONS:

1. Asset movement pipelines must be stable and have single priority for requisitions
2. Processing time for base shipping document into DO35 still too long
3. Time to move assets to maintenance once requested still too long; express table did not have a significant impact
4. Improvements in time depot supply processes a serviceable turn-in
5. Shipping time from the depot to the bases improved
6. O&ST slightly improved but UMMIPS causes instability

C-5[2]

The C-5 demonstration began earlier than the other shop and weapon system demonstrations and there is much to learn from that experience. Findings, workarounds, and lessons learned are presented below.

FINDINGS:

STOCK CONTROL

Command Established Stock Levels

1. Findings:

- Base 'lean levels' are significantly lower than the normal demand levels.
- Formula used was accurate based on metrics collected.
- Problems identified as parts shortages in the field can be directly linked to problems with meeting repair, both at depot and base level (i.e., parts shortages, equipment outages).
  - -- Higher levels at the bases would not prevent these problems, just delay them.
- Calculating lean levels is labor intensive.
- Constraining repair time at the bases to 4 days may not be fair based on DLR funding, does nothing to improve parts support to the base, may be hurting support, and forces a two level maintenance approach.
- There is a new SBSS discrepancy report associated with fixed levels and 468 rejects. The discrepancy has caused multiple problems in automated processing.

2. Suggested changes:

- Only the O&ST should be constrained when calculating levels.
  - -- Will allow bases to repair items.

[2] Information taken from "C-5 Lean Logistics Demonstration", authored by HQ AMC/LGSWR.

-- Will eliminate reject problem associated with fixed levels.

-- Will allow actual consumption data to be reflected automatically in the demand level.

Centralization of Assets Under Command Control

1. Findings:

- System limitations of the SBSS required Dover and CSF levels to be combined

-- In some cases, this left Dover levels vulnerable to be used to fill other base requirements and, in other cases, made Dover asset rich.

- Use of any type of special level prevents use of actual current consumption data from being used to automate level calculation.

- As with the base levels, the formula used was accurate based on metrics.

- Level determination is labor intensive.

- Shipments from depot to Dover, then Dover to other bases cause additional shipment costs.

- Manpower to receive, store, and ship this limited number of assets was provided by Dover. As program grows, resources such as manpower, computer time, warehousing, and budget must be considered.

- Requisitions were not being received by Dover (CSF). On those items receiving numerical follow-up status: e.g., 99, 98, .., versus alpha status: e.g., BA, BB, .., it was necessary to telephone Dover to see if the requisitions had been received. In most cases, the numerical status requisitions had not been received.

2. Suggested changes:

- Eliminate CSF concept, adopt the consolidated serviceable inventory (CSI) concept being used by AFMC for their shop demonstrations.

- - Should reduce second destination charges.

- - Adds one to two more assets into the total pipeline per NSN.

Control of Serviceable Assets Distribution

1. Findings:

- SBSS was not developed to operate as a full scale distribution system.

-- Full implementation using SBSS will require schema changes.

-- Other computer systems and software may be necessary for this element of command and control.

- Requisition tracking between the requester and the receiver is, at best, difficult.

- Fill or pass program not working as explained in AFM 67-1.
  - -- Testing all parts of the process to determine specific problems will be identified to SSC.
  - -- Considering an alternate method--fill or backorder.
- CSF has experienced excessive computer downtime.
  - -- No post-post procedures were developed for CSF operation.
  - -- During downtime there is no visibility of available asset at the CSF (same at depot).
  - -- Complicated process to get part out of CSF when computer is down.
  - -- Impossible to get part out of depot when their computer is down.
- Stock control actions at bases easier to look at when centralized at command.
- Not currently using an automated decision tool to distribute limited serviceable assets.
  - -- Best guess based on information provided by base and HQ AMC/LGSWA.
- Second destination transportation charges by using CSF.

2. Suggested changes:
   - Fill or backorder.
   - Use of DRIVE off-line to determine if the correct distribution decisions are being made.

REDUCED PIPELINE

Retrograde Shipment to Source of Repair (SOR)

1. Findings:
   - Increased cost for retrograde shipping.
   - This part of the pipeline is working.
   - Possible adverse effect to base repair.

2. Suggested changes:
   - Express retrograde shipments should continue.
   - Constraint of base repair time should be removed, but watched closely.

Serviceable Shipment from Depot to CSF

1. Findings.
   - Using DLA-provided data, this part of the pipeline is working.
2. Suggested changes:
   - None unless coding mentioned above is completed sooner than planned.

Serviceable Shipment from CSF to Customers

1. Findings.
   - Increased transportation cost at Dover.
   - EP2 program working well.
2. Suggested changes:
   - Do not use the CSF concept.

STREAMLINE BASE REPAIR PROCESSES AND ACCELERATE DEPOT REPAIR PROCESSES

Accelerate Base/Depot Repair Processes

1. Findings:

- The development of the central storage facility at Dover as a buffer to store sufficient material to respond immediately to demands from the bases was successful, but not the best method.

  -- Dover encountered some initial problems with the fill/pass method.

- Bases are not evacuating NRTS 4 items withing the 4-day window.

  -- DLR costs encourage the bases to hold on to the assets. CSF will not ship a serviceable asset until the unserviceable lean level item is shipped.

- Holding on to end items in AWP status delays replenishment and causes the base to exceed the 4-day pipeline standard for base repair cycle time.

2. Suggested changes:
   - Eliminate CSF concept.
   - Do not ship a serviceable assets until the unserviceable lean level item is shipped.
     - - Backorder all support bits and pieces as lean level items.

Reduced Handling Time

1. Findings:

- The base repair cycle time has gone from an average of 8 days prior to the demonstration start to 3.2 in the month of July 1994.

  -- This, however, might be a reflection of the decline in NRTS 4 turn-ins.

- In the month of July, only 4 of the 24 items met their negotiated flow times.

2. Suggested changes:
   - Monitor the repair cycle time system using AFLIF or ATAC.
   - Delay implementation of Phase II until SA-ALC/LAD officially announces the

date they can support the LEAN LOGISTICS levels to successfully implement this demonstration.

SUMMARY: Lean logistics operations require more than just moving material quickly and accurately. Money can control the speed of transportation, but management must control the speed of repair. This demonstration has shown that the shipment part of the pipeline can be reduced to less than two days (when the documents are properly annotated, i.e., when they reflect the RDD of 777), but effective lean operations require more than just moving material quickly and accurately. Why should the Air Force incur the extra cost of premium transportation just to have the items sit on a shelf waiting for repair?

NRTS 4 turn-ins dropped almost in half from May to July (96 to 54), which indicates that customers are more confident of repairing the items themselves as opposed to paying the depot to produce serviceable assets.

Direct induction must be emphasized and obtained for implementation of LEAN LOGISTICS concepts fleetwide. True measurements of the system cannot be obtained until the depot can repair on demand and produce assets to fill holes.

Under this LEAN LOGISTICS concept, every requisition represented an immediate requirement for fill action, either from the CSF or source of repair. Bases requisitioned to the CSF when the serviceable plus due-in from maintenance balance fell below the lean level. These requisitions were submitted as fill or pass to the supporting CSF, which would either fill the requirement or pass the requisition to the AFMC source of supply (SOS).

The reparable pipeline is the lifeline of this system. In order to survive in a lean environment, maintenance, supply, and transportation must give special attention to prompt reparable processing. This is an advantage in the two-level maintenance (2LM) arena which immediately puts the assets into the pipeline, rather than in the shops for bench check/repair. It is imperative base do not hold assets for an extended period of time (4 days maximum were allowed in this demonstration).

WORKAROUNDS:

1. Manual tracking of data. Current systems are too cumbersome to effectively manage, track and score (flow days) items one at a time. Systems must support business activity, i.e. actual cost accounting and tracking through a system, not pencil and eraser. Currently, manual inputs contribute to errors.

Stock control at the base level had many manual procedures and responsibilities during the demonstration. For example: loading data records with overrides, REX codes, and minimum level "C." AOAs in-line were passed through SIFS which did not provide visibility. The R29 had to be monitor constantly to correct problems immediately.

2. Stock controls had to manually maintain an AOA log to make sure all NSNs are loaded at the CSF, and if not, change AOA NSN to NSN loaded at CSF. It was also necessary to pass AOAs for accounts that cannot transmit (FB2059).

3. Requisitions were not always received at the CSF. Local procedures were used to make the demonstration work. Every requisition had to be followed up with a phone call to Dover. All LEAN LOGISTICS requisitions were down loaded to a "flat file" for later reference.

4. Computer requirements computations counted unserviceable due-ins from the forward supply locations as due-in stock. If due-in from the forward supply location for an unserviceable reparable caused us to exceed our RO, requisitions for stock would be canceled. All LEAN LOGISTICS items had to be manually monitored and item managers had to be contacted and told that the RO was not being exceeded.

5. Automatic replenishment of RSP did not flag LEAN LOGISTICS items. When processing an MSI from an RSP detail and using the automatic replenishment option, the due-in generated does not reflect the item is LEAN LOGISTICS. Automatic replenishment had to be suppressed and due-outs processed off-line.

6. Storage of LEAN LOGISTICS items at the CSF. All LEAN LOGISTICS NSNs were moved to one warehouse for control purposes. Had to maintain a call-in log, manual monitoring of LEAN LOGISTICS for excess conditions, and monitoring RSP due-outs for TEX code "Z."

7. No visibility of automated requisitions (had to get with computer room to pull down list of LEAN LOGISTICS AOAs for tracking). Manual visibility was required to assure requisitions to fill base LEAN LOGISTICS were not due-outs released to fill an RSP requirement.

8. Post-post procedure problems with LEAN LOGISTICS: RSP due-out release (program control automatically releases to highest priority), determination of item availability of co-located parts, and 290 rejects MSI vs ISU (co-location of POS and IRSP coupled with manual and automated requisition process made record updates difficult to keep).

Bases must go post-post when the CSF system is down. Requisitions needed to be called in and logs kept. Test plan did not designate central call-in point for Post-post requisitions, so local decision had to be made. Dover CSF was not completely assured that passing actions were working when management notices were reprocessed to the depot.

9. At the CSF, DIFM responsibilities and processes were required for demonstration implementation: incheck LEAN LOGISTICS items manually to verify all assets against list of LEAN LOGISTICS NSNs, transport items to shops, update DIFM status and location, follow-up

with DIFM monitor, pick-up item from repair shop, process TRN/TIN, transport serviceable to LEAN LOGISTICS warehouse, then process NRTS shipment through FedEx.

10. Metrics collection required much manual handling of lists and data. Had to go through maintenance (CANN and DLR logs) to get some data, plus repair cycle times and MDR/QDR incidents.

11. Since the C-5 demonstration involved only six bases (plus the depot), the point of sale can be changed at the contractor and the information can be provided to them identifying where the assets should be shipped. This can be handled in 2 ways:

1. The contractor can call the PMS and tell them how many assets are ready to shop. The PMS contacts the IMS to obtain document numbers that need to be shipped first, then calls the contractor with the information. All of these phone calls add additional processing time due to people being away from their desks, or even absent on the day that assets are ready. After receiving a government bill of lading (GBL), which can take up to 5 days, the contractor ships the assets and calls the PMS to tell them what day the assets shipped. The PMS then notifies the IMS so that the backorders can be released form the backorder list.

2. The IMS can provide the PMS a list of the sequenced backorders for shipment, which the PMS can provide to the contractor prior to the assets being ready to ship. However on any high usage items, the priorities will continue to change due to new MICAP or JCS backorders so this information would continually change.

These are totally manual processes and must be remedied prior to full implementation.

LESSON LEARNED:

1. Let the SBSS lean the levels based on actual transportation and repair times. The negotiated flow days were based upon a formula, AFMCR 66-11. This is an average repair time through a repair shop, based on a certain time frame, i.e., some take less, some take longer. Longer times were driven by many other factors:

1. Each ALC calculated their flow days differently. Should have uniformed procedures.

2. Not all ALCs are treating the repair of the LEAN LOGISTICS assets the same. Some are processing the assets over other higher priority workloads.

3. Priorities of our workload often take precedence over lean items adding to actual floor days to produce the item.

A test item, as the exception to normal processes and procedures, leads to much confusion among all concerned. According to SM-ALC, each technician of a lean item currently words 2-8 other items throughout a given quarter.

2. Test equipment became saturated due to RSP and Surge demands, which added to the flow days. Additional test equipment could not be obtained due to allowance tables and funding. Need to consider this prior to inducting future NSNs into LEAN LOGISTICS.

3. Parts supportability. Under LEAN LOGISTICS, one of the most repeated problems brought up by the bases was that they suffered more due to parts supportability and loss of flow days awaiting parts. AFMC is working this issue. A short term fix was put in place, allowing bases to backorder bits and pieces with the same LEAN LOGISTICS priority as the LRU.

For one particular item, the Stage 1 HPT, a waiver was needed to cannibalize EOQ assets from reparables that were in "ineligible stock." If this waiver had been denied, there would have been a complete work stoppage on the MISTR repair line due to a consumable parts shortage. Much of the parts shortages is due to less than 100% funding for SSD.

4. In an early working group, it was decided LEAN LOGISTICS should adopt lessons learned from 2LM. Many of the problems identified in this demonstration were identified in 2LM already. For instance: systems problems, parts supportability, and repair pipeline times. The only process from 2LM that worked was the transportation pipeline, which again was successful. The C-5 LEAN LOGISTICS program demonstrated all the constraints that were previously predicted. The shortened transportation pipeline was really proven under 2LM and adopted into LEAN LOGISTICS.

5. As transportation (rather than storage) becomes the prime contributor to our ability to deliver material on time, the importance of managing information about intransit assets and the status of movements becomes paramount. A tracking tool is necessary for LEAN LOGISTICS to succeed. Logistics information will become a principal commodity of the logistics system. As resources decline, the demand for tracking them becomes more of an issue.

6. Better written procedures on LEAN LOGISTICS needed to be distributed. There was a lot of improvisation and many telephone calls to HQ AMC which caused delays in implementation.

7. Some bases felt everyone did not appear to be sharing the same sense of urgency as the rest of the players. For example, one workcenter closed while it relocated, and one sole source supplier closed for the holidays.

8. Lean Logistics must be applied to a complete shop. It is obvious that a few items can be hand-massaged, but the principles of LEAN LOGISTICS operating fleet wide must be demonstrated.

9. Need to develop a better means of tracking metrics. AF/LGM-2 and AFMC have contracted with SYNERGY to produce metrics and provide data analysis, and their methods can be found in the "USAF LEAN LOGISTICS MASTER PLAN AND ROAD MAP."

10. SBSS difficulties: Under regionalization, Dover does not own the SBSS computer; so problems were discovered when the computer was not in-line. Requisitions processed in-line are

passed through SIFS, but the process is invisible (computer to computer). However, to support satellite customers, Dover CSF had to manually intervene to track if AOAs were passed through Dover SBSS to depot (manual workaround). Other bases in C-5 demonstration not regionalized with CSF couldn't always tell when the Dover system was down so incoming requisitions were not automatically processed, requiring manual monitoring.

Also, there seems to be delays/bottlenecks at the depot source of repair. One problem that remains is that there is no common system between the customer and the SOR. It seems that the D035 and SBSS systems cannot be interfaced. For LEAN LOGISTICS to utilize these systems, a programming solution is required.

11. Serviceable assets that have been repaired by a contractor are shipped into the depot, then distributed via computer. An ASI must be submitted for each asset which is specified in the contract. Besides being a manual and time consuming task, ASIs can also be a hindrance to customer support. An ASI states a particular backorder be shipped from a specific contract. Once the ASI is received at the contract facility, it is tied to that contract. A contractor can have multiple contracts open simultaneously for the same part. If an ASI has been issued against a contract and something happens which halts repair on the contract (such as parts problems), the ASI is on hold and the backorder will not ship. Meanwhile, there may still be production on the other orders and other backorders will release ahead of the one tied to the ASI. In order to ship these backorder which is tied up, the IM must amend the ASI, or double ship to the customer. It is therefore very undesirable to use ASIs.

To avoid this, the contract must be written to change the point of sale and have the DD250 signed for receipt at the contract facility. This will enable the asset to be shipped to a destination that is specified by the IM.

12. A computer link needs to be established to the contractor to enable them to access D035A and D035T. The backorder list (D035A) would be prepositioned by the IMS; then the contractor would ship assets according to the prepositioning. D035T would give the contractor the shipping address for the asset. The contractor would then input the release code for the backorder, thus eliminating all manual efforts. This should not breach any security because it is all information which is normally provided to the contractor on an ASI.

Additionally, the GBL which must be obtained by the contractor prior to shipment takes anywhere from 1 to 5 days to obtain.

13. A Federal Express number should be established for use by the contractor and added to the contract. This enables the contractor to ship serviceable assets immediately.

14. When using direct induction via express table, all ineligible assets must be moved from condition F to condition J prior to implementation. This should be done ahead of time (approx. 2 weeks), however with high usage items, additional assets will be received prior to the start date. If these additional assets are not moved to ineligible stock, they will be inducted when the express

table is activated. DLA POC needs to be established to be contacted on the day prior to implementation and notified of all additional assets received which need to be moved immediately.

15. Direct induction via express table creates an erroneous balance of assets in the pipeline. The CSI level is established based upon predicted assets needed in the pipeline, if the pipeline is shortened, the levels will re-adjust accordingly. If the base level decreases, the next reparable asset will be sent to the SOR and simply not replaced at the base. However, the reparable asset will still be inducted and repaired, even though there is no longer a need for that asset.

Assets should be inducted upon demand (i.e., backorders) instead of reparables generated. This would compensate for fluctuations in established levels.

16. In future planning, all Lean Logistics demonstrations should begin at the beginning of a quarter, to minimize mid-cycle trauma and confusion.

17. One ongoing problem involves those C-5 LEAN LOGISTICS items which are also 2LM. Specifically, 2LM items come to the express table under condition code K verses F. This allows 2LM assets to be tracked. It also identifies to the repair shop that the asset needs only an intermediate level repair, verses full depot overhaul. HQ AFMC has released a message stating that this problem is really minimal, and should not be a player in the future.

F-16 CORONET DEUCE[3]

The completion of CORONET DEUCE III provided a large amount of information about potential improvements to avionics repair processing. Lessons learned included the following:

1. A number of innovative methods were used to decrease CND rates. End-to-end tests were run two to three times to confirm the serviceability of a component. If doubt persisted, an aircraft was used a hot mock-up. Test station operators and flight line technicians discussed specific component problems. Additional screening for CNDs was performed at the depot.
2. Improvements to MAJCOM processes were made to support two-level maintenance. Operational units formed working groups of those involved in 2LM, focusing on pipeline flows and budget status. Some units provided daily status information on all CORONET DEUCE transactions in the previous 24 hours, checked it against all assets that had entered the AIS shop and reconciled any differences. Process improvements begun in CDII were continued, including: station grouping, LRU tracking, AWP cannibalization, job routing and floating stock, adjusted work weeks/work shifts, owner/operator station maintenance, improved avionics software loading, and express induction/sales. An activation integrated process team ensured organic capability was obtained by the depot as quickly as possible after delivery of contractor test program sets. An information system--Material Tracking System (MTS)-- was needed to record depot pipeline time sequences, using bar coding where

[3] Information taken from "CORONET DEUCE III Final Report F-16 Avionics Test", October 1993.

appropriate. Finally, a Route Tracking System (RTS) was developed to track shop routing of SRUs and report consumption data prior to negotiation or buy computations, to the IMS.

3. A number of improvements were made to the repair prioritization/asset distribution process. Automating the express table and linking it to Desktop DRIVE helped choose the correct repair item. An avionics bulletin board was devised to enhance communications between all parties in the process and help identify bad actors.
4. One position was made for "gatekeeper" of all deficiency reports (DRs).
5. RIMCS needs to be modified to accept four "ship to" SRANs.
6. R2P was successful in reducing pipeline times.
7. IMs and PMSs must ensure depot AWP requirements are fully satisfied.
8. Full funding for RSD repair and SSD/GSD procurement of bit and piece requirements for SRU repair is critical.

Checklist of Required Actions

A checklist of required actions to implement Lean Logistic is provided below. This list includes base level, MAJCOM, and depot-level requirements. Most of the information provided has been taken from the Communications-Electronics Demonstration Plan[4]. As other Lean Logistics demonstrations proceed, additional information will be added to this list.

IMS & PMS Setup Procedures

The following instructions should be used by each Item Management Specialist (IMS) as they apply to the actual NSNs and all their related interchangeable and substitutable (I&S) items. (Note: Management Review Codes are not being used for this demonstration).

1. Lean Logistics shortfalls for the total pipeline demo are being computed for the final repair requirement prior to Lean Logistics start-up.

2. The Production Management Specialist (PMS) must contact the depot repair shop scheduler to induct all assets required to fill the shortfall in support of the CSI levels for the total pipeline demonstration. Induct NLT 16 Sep 94. The 804 negotiation will follow if necessary. The C-E SSM will ensure funds availability if necessary. This step is critical and must be accomplished as a top priority.

3. The IMS must immediately send a message to all storage sites (DDST) and order all eligible assets into the FFB account NLT 20 Sep 94. Request reply by priority letter to 652ABG/LGSPS. All ineligible assets will be put in Ownership Purpose (OP) code "B" at the depot if serviceable and OP code "J" for unserviceable assets.

4. The PMS must request that the shop scheduler place all items for the total pipeline demo on the express table effective NLT 1 Oct 94. (Remember: any "F" condition items remaining on record will automatically be inducted into maintenance when the asset table is loaded). The express table should be 99 each.

5. All requisitions should show project code "879" and should ship automatically by D035.

6. For the total pipeline demo, the PMS must notify the depot repair shop to stop calling in turn-in documents to the ALC. Turn-ins should be processed to supply within the Lean Logistics time allowance for shipment. (Only 2 days should pass between the time the asset is received and it is shipped to the customer).

7. Assets produced by the shop after 1 Oct 94, that are over the CSI level are excess to the demonstration (ineligible stock), should be shipped to the SOS ALC by the IMS on a post-suspense document, marked for Ownership Purpose code "B."

[4] Information taken from the "Communications-Electronic Lean Logistics Demonstration Plan", September 14, 1994.

8. Because of the importance of the demonstration, the PMS will request that all assets in the shop exceeding the computed Lean Logistics shortfall (work with the IMS if there is a question on this) as of 27 Sep 94 be returned to supply in condition code "F." (The demonstration seeks to see if the shops can meet the "negotiated repair times" with a limited number of carcasses).

CHECKLIST FOR BASE COMM UNIT

1. Ensure that the materiel controller is qualified as limited supply inspector. This applies to those MAJCOMs that use the unit as the express transportation point.

2. Obtain express transportation labels.

3. Give address to MAJCOM representatives for R2P delivery location.

4. Obtain boxes and training on packing from TMO.

5. Ensure materiel control has procedures for contacting local Federal Express carrier from your MAJCOM POC. Get Federal Express point of contacts (POCs) and submit them to MAJCOM representatives.

6. Arrange for ATAC password and training from MAJCOM/base delegated training person.

7. Establish local procedures with chief of supply (COS) for C-E lean logistics processing.

8. Delete any forward supply point details on the non-essential items and turn-in assets to base supply.

9. Make a sign to remind everyone to use project code 879 on the system in the demo. This applies to reparable items only. Post sign in materiel control, maintenance workcenter, and any other applicable locations.

10. Ensure copy of demo plan is on hand and has been reviewed by all personnel.

11. Develop local procedures to expedite processing of reparables on lean logistics demo systems including bypassing of QC.

12. IAW MAJCOM direction request FY DODAAC account for locations other than base supply that are involved in R2P deliveries. DODAAC requests will be forwarded for submission /approval of MAJCOM DODAAC monitor to AF monitor (AFMC).

13. Use correct system SRD on all requests to ensure accurate tracking of stats.

CHECKLIST FOR CHIEF OF SUPPLY

1. Obtain from the MAJCOM the process for use and tracking of ineligible lean logistics stock.

2. Adjust SBSS records as instructed by MAJCOM by specified date.

3. Review the new item loads to identify demo NSNs weekly. Advertise demo system NSNs and SRDs so the correct project code (879) and RDD of 777 will be used on issues/requisitions/shipments. Demand Processing /Research sections should ensure the appropriate codes are loaded as soon as possible.

4. Capture baseline data and monthly report metrics.

5. Track metrics weekly for February 95 and monthly thereafter.

   a. Base Reparable Evacuation Time
   b. Base Issue Effectiveness
   c. Ineligible Withdrawals
   d. Inventory Levels
   e. RSP Issue

6. Support any RDO requests from the depot.

7. Provide authorized training as a limited supply inspector to comm unit personnel as necessary.

8. For AMC test bases, ensure SBSS connectivity and access have been established.

9. Obtain ATAC passwords and training.

10. Obtain from the MAJCOM the process for use and tracking ineligible stock

11. Report ineligible stock withdrawals to MAJCOM POCs .

12. Ensure a copy of demonstration plan has been reviewed and is on file .

13. Ensure REX modifier and a SEX modifier are loaded as specified.

14. Verify RIMCS addresses for all the demo items have been loaded.

15. R2P:

(1) Designate flightline/Comm Squadron pick-up and delivery points (bldg./room numbers) and assist the TMO in developing local procedures.

(2) Appoint personnel to pack, process and release reparable R2P LRUs for shipment and receipt and in-check serviceable LRUs.

(3) Maintain LRU/reusable container integrity.

(4) Coordinate Advance NRTS procedures with Traffic Management Flight. Ensure the correct R2P destination, TAC and TCN are listed on the airway bill.

CHECKLIST FOR MAJCOM
MAJCOM LG

1. Ensure distribution of plan to all base supply.

2. Get formal approval of the plan by obtaining LG/SC/CI signature.

3. Pass upload program to all bases.

4. Track metrics weekly for February 95 and monthly thereafter.

   a.. AWP Time

   b. Ineligible Withdrawals

5. Obtain ATAC passwords and training.

6. Develop and publish process for use and tracking of ineligible stock withdrawal.

7. Ensure all baseline adjustments are made by the bases.

8. Obtain access to DO35:

   a. D035C - In data/SM-ALC

   b. D035A - Serviceable & asset transactions

   c. D035K - Data equipment to SBSS

   d. D035T - Transportation date

9. Verify that addresses for delivery/pick-up locations are correct. Provide addresses to HQ USAF/LGM-2 (Lt Col Melchor) after verification.

10. Ensure expeditious handling of FY account requests.

11. Provide to the base supply and comm units a list of ATAC trainers .

12. R2P Responsibilities:

(1) Appoint a MAJCOM Transportation Staff point of contact for the LL Demonstrations. Coordinate actions with MAJCOM counterparts in Supply, Communications, and Maintenance.

(2) Get the word out on the nature and applicability of the LL demonstrations in each command.

(3) Review these procedures and supplement as necessary IAW command policy.

(4) Ensure base-level personnel are trained and utilizing these procedures

(5) Info HQ USAF/LGM-2 on all message traffic.

(6) Ascertain the pick-up and delivery location on each base for LLC Demonstration NSNs and forward information to HQ USAF/LGM-2 to obtain pre-printed airway bills.

(7) Monitor metrics and assist bases in their continuous improvement efforts.

MAJCOM COMM

1. Ensure distribution of the demonstration plan to comm units.

2. Obtain DCS level signature on demonstration plan.

3. Coordinate on LG procedures for use and tracking ineligible stock withdrawals.

4. Assist LG in verifying delivery and pick up addresses for the express carrier and pass on to USAF/LGM-2 (Lt Col Melchor) by 9 Sep 94.

5. R2P:

(1) Designate flightline/Comm Squadron pick-up and delivery points (bldg./room numbers) and assist the TMO in developing local procedures.

(2) Appoint personnel to pack, process and release reparable R2P LRUs for shipment and receipt and in-check serviceable LRUs.

(3) Maintain LRU/reusable container integrity.

(4) Coordinate Advance NRTS procedures with Traffic Management Flight. Ensure the correct R2P destination, TAC and TCN are listed on the airway bill.

CHECKLIST FOR DEPOT

1. Item managers review all Management Review Codes (MRC) to ensure they are properly assigned with a valid justification.

2. Item managers review all demo items to ensure the CSI and lean levels are filled.

3. Obtain ATAC password and training for Item Managers.

4. Verify that DLA express transportation process is in place.

5. Collect data on RDO and denial rate to fill CSI levels.

6. Collect D041 baseline data from the March and September Comps for analysis of change to the requirements process. In addition, collect the information by stock number on buy reduced/canceled, increase in long supply, outyears reductions, etc.

7. Change all ineligible assets to supply condition code ' B ' before updating the express table.

8. Ensure NSN for the total pipeline demonstration are loaded on express table.

9. Identify any monetary impacts to AFMC and Air Staff.

10. Track metrics weekly for February 95 and monthly thereafter.

   a. AWP Time
   b. Base Shipment Processing Time
   c. Reparable Transit Time
   d. CSI Shipping Time
   e. Depot Processing and Depacking Time
   f. Packing to CSI Time
   g. Packing to Shipping Time
   h. Request to Fill Time
   i. Serviceable Transportation Time
   j. Shop Repair Time
   k. Transaction Communication Time
   l. CSI Issue Effectiveness
   m. Ineligible Withdrawals
   n. Inventory Levels
   o. MDR/PQDR Incidents
   p. Negotiated vs. Actual Repairs

11. Identify any metrics not present in the automated process for collection.

12. Item managers will flag reparable returns that were made from ineligible stock withdrawals and upon receipt of reparable transfer the item to condition code "B."

13. Develop a process to review periodically, the CSI and base lean levels, to include tracking of changes, frequency of updates, etc.

14. Load Project Code "879" in the D035K for all items in the Lean Logistics demonstration.

15. Change Ownership Purpose (OP) code of serviceable and unserviceable ineligible stock. See IMS & PMS Setup Procedures, Appendix A-1 for any clarification.

16. Maintain backup Express Table data for Project Code "879" assets.

17. Provide advance notice of reparable returns if required.

18. R2P Responsibilities:

a. Air Logistics Centers: Identify applicable NSN. Screen NSN for R2P criteria (weight, height, classification, and hazard). Coordinate with DLA to ensure prompt billing and payment of Express Carrier shipments is accomplished at the Depots.

b. HQ Defense Logistics Agency: Ensure return labels are placed inside serviceable containers.

CHECKLIST FOR AFC4A

1. Work with AMC and ACC to develop automated baseline process for updating Chief of Supply records.

2. In coordination with SM-ALC, document and publish updates to the demonstration plan with SM-ALC.

3. Get updated demonstration plan to MAJCOMs ASAP.

4. Obtain ATAC password and training.

5. Finalize CSI and base lean levels with SM-ALC.

TRANSPORTATION SQUADRON/TRAFFIC MANAGEMENT FLIGHT

R2P:

(1) Develop local procedures in conjunction with maintenance and supply counterparts to implement express transportation support for the LL Demonstrations. Assist in selecting pick-up and delivery locations.

(2) Provide to MCs packing materials, tools, and supplies such as tape, obliterating spray, and airway bills.

(3) Establish agreements and arrange schedules with local Express Carrier representatives for daily pickup and delivery at the selected locations.

(4) Train MC personnel to manually complete Express Carrier Airway Bills if required.

(5) Issue/process Transportation Discrepancy Reports (TDRs) (SF 361s).

(6) Develop procedures for tracing late or lost shipments.

(7) Provide Traffic Management assistance/expertise as required.

(8) Establish and maintain a separate LL Demonstration file for the Express Carrier Airway Bills that the MC processes and ships.

(9) If volume of shipments warrant and if desired by MC personnel , coordinate with local Express Carrier representative to obtain a Powership Terminal for the MC pick-up point. Notify your MAJCOMs and USAF/LGM-2 if you obtained an additional Powership as a result of these demonstrations.

(10) Ensure airway bills are used to clear the Shipment Suspense Record (SSR).

DLA Processing

DLA Processing - "F" Condition Materials (Reparables):

1. When material is received at the Defense Distribution Depot McClellan (DDMC) it is off loaded from its source of transportation. The material is then processed through incheck procedures and is forwarded to the appropriate processing area. Size and type of material will usually dictate where the item is processed. The material could go to one of the following areas.

a. Small item receipt area
b. Bulk receipt area
c. Outlying area
d. Production turn-in area

2. When the processing area receives the material, an inspector will check the material for all receipt documents (DD Form 1348-1, DD Form 250, DD Form 1149). The material is also inspected for damage, correct NSN, and other data.

Note: If material is damaged through shipment or the NSN sticker or tag do not match the NSN on the item, a Report of Discrepancy (ROD) will be prepared. That item is segregated awaiting inventory management specialist (IMS) disposition.

3. If the material can be further processed, the "D6" transaction is entered in the D035K system. The system will then generate a "D7" backorder release. The asset and the paperwork will then be routed to the express staging area.

4. Once the material is received in the staging area it is moved to the maintenance area where they take possession of the property.

Note: Before this process can occur, the Lean Logistics (LL) NSNs (Master and Subs) must be loaded into the D035K Express Table with an "F" condition code. Project Code table in D035A must be loaded with Lean Logistics Project Code 879, because Project Code is used in G402A for tracking.

DLA Processing - "A" Condition Materials (Serviceables):

1. When serviceable material is received at DDMC from maintenance it is off loaded from its source of transportation. The material is then routed to the production turn-in area and is inspected. If problems are detected with the material or paperwork, maintenance will be contacted for further instructions or clarification. If material is OK and all paperwork is complete, a "D6" transaction will be entered in the D035K system. This action will produce an output that will determine what further action to take with the material.

2. If the item is not an express item, the paperwork will be attached to the asset and the packaged asset will be routed to the consolidated storage area. This item will remain in the storage area until a demand is received for the asset. When this occurs, the asset is pulled from the storage area. If the automated warehouse system is used, the item must be cleared from the system. The demand against the item will produce a DD Form 1348-1A that will be used to route the material to the customer. The item will be routed to packaging for final packaging and shipment.

3. If the item is required now, and passes the express transportation shipping criteria, a DD Form 1348-1A will be generated and the material will require immediate processing. The material will be moved to express packaging where it will be packed for shipment.

4. Once the item is ready for shipment, the express ticket will be attached to the material and it will be sent to the packing address and labeling system. Labels will be produced which include: Ship To:, Ship From, Transportation Control Number (TCN). The labels and DD Form 1348-1A will be placed on the package and it will be forwarded to the surface terminal.

5. When the package is received at the surface terminal, it is checked for proper tagging and labeling and is shipped to its destination.

DRAFT

Document Separator

USAF Baseline Lean Logistics Master Plan and Road Map

Version 3.0

31 January 1995

HQ USAF/LGM-2

TABLE OF CONTENTS

EXECUTIVE SUMMARY 7

1.0 INTRODUCTION 10

1.1 The Logistics Challenge 10
1.1.1 New Operational Concepts 10
1.1.2 Uncertainty 11
1.1.3 New Fiscal Environment 11
1.1.4 Department of Defense (DoD) Logistics Support Guidance 11
1.1.5 Managing Logistics Tradeoffs Through Total Cost Analysis 13

1.2 Lean Logistics as a Proactive Response 13

1.3 Lean Logistics Goals and Objectives 13
1.3.1 Goals 13
1.3.2 Objectives 14
1.3.3 The Results and Risks of a Lean Logistics System 14

1.4 Lean Logistics Master Plan 15
1.4.1 The Need for a Master Plan to Guide Lean Logistics Implementation 15
1.4.2 Master Plan Goals and Objectives 15
1.4.3 Master Planning Process 15

2.0 LEAN LOGISTICS BACKGROUND AND CONCEPTS 17

2.1 Genesis of Lean Logistics 17

2.2 Lean Logistics Concepts 18
2.2.1 The RAND Lean Logistics System 19
2.2.2 Current Air Force Design 19
2.2.3 Continuous Improvement 20
2.2.4 Cross-Functional Processes 21

3.0 LEAN LOGISTICS INITIATIVES AND ISSUES 22

3.1 Two-Level Maintenance 22

3.2 DLR Ownership 22

3.3 C-5 Lean Logistics Demonstration 23

3.4 Communications-Electronics Lean Logistics Demonstration (SM-ALC/AFC4A) 23

3.5 Radar-Navigation Shop Demonstration (WR-ALC) 24

3.6 Oxygen Systems Shop Demonstration (OC-ALC) 24

3.7 F-16 Avionics Consolidation Demonstration (OO-ALC) 25

3.8 Electronic Engine Controls Demonstration (SA-ALC) 25

3.9 Hydraulics Shop Demonstration (SM-ALC) 26

3.10 E-3 Weapon System Conversion (OC-ALC) 26

3.11 Shop Demonstration Comparison and Issues 26
3.11.1 Shop Demonstration Comparison 26
3.11.2 Shop Demonstration Issues 28
3.11.2.1 Responsive Depot Repair Processes 28
3.11.2.2 Reliability and Maintainability (R&M) 28
3.11.2.3 Responsive Transportation 29
3.11.2.4 Readiness Spares Packages (RSP) 29
3.11.2.5 Stock Leveling Process 30
3.11.2.6 Financial Management 31

3.12 Regional Maintenance Center Concept Evaluation 31

3.13 B-1 ORA 31

3.14 Lean Logistics Master Plan/Road Map 32

4.0 RELATED INITIATIVES AND ISSUES 34

4.1 Lean Logistics Supply Initiatives 34

4.2 Transportation's Contribution to Lean Logistics 35
4.2.1 Key Concepts 35
4.2.2 Transportation Enabling Actions 36
4.2.3 Required Transportation Investment 37
4.2.4 Role of Express Delivery Reinvention Laboratory in Support of Lean Logistics 38

4.3 Lean Logistics Cost Issues 38

4.4 Lean Logistics Information System Issues 40
4.4.1 ATAC-AF 40
4.4.1.1 ATAC-AF Schedule 40
4.4.1.2 Information Provided 40
4.4.1.3 Interface Requirements 41
4.4.1.4 Pipeline Measurement 41
4.4.2 Pipeline Data Measurement Tools 42
4.4.2.1 AFLMA Lean Logistics Visibility Tool 42
4.4.2.2 Shop Measurement Tools 42
4.4.3 Other Information System Issues 42

4.5 Lean Logistics Design Issues 43
4.5.1 Location of Consolidated Stocks 43
4.5.2 Repair to Demand 44
4.5.3 Control of Stock Distribution 44

4.6 Weapon System Cost Reduction (WSCR) Program 45

5.0 LEAN LOGISTICS EVALUATION 46

5.1 Methodology to Undertake Appropriate Implementation 46

5.2 Process Chart of the Pipeline for Reparable Items 46

5.3 Activity Based Costing Application 48

5.4 Incorporate Impacts of Information Systems, Regulations and Acquisition Procedures 48

5.5 Consistent with DoD Regulations for Process Analysis 48

5.6 Data Analysis and Evaluation Procedures 48

6.0 IMPLEMENTATION 50

6.1 Technical Implementation-Metrics 50
6.1.1 Data Analysis Procedures 52
6.1.1.1 Pipeline Times 52
6.1.1.2 Depot Shop Repair 52
6.1.1.3 Base Processing 53

6.2 Technical Implementation-Laws, Policies, Guidelines 53

6.3 Technical Implementation-Repair Parts Availability and Acquisition Procedures 54

6.4 Technical Implementation-Information Systems and Technical Data 55

6.5 Cultural Implementation 56

6.6 Organizational and Educational Issues 57

7.0 OTHER COMPLEMENTARY ISSUES 58

7.1 Application of Lean Logistics Concepts to Other (Non-Aircraft) Systems 8

7.2 Cross-Service/Agency Impacts 58

7.3 Impacts on Personnel 58

7.4 Impacts on Facilities 58

7.5 Impacts on Cost 58

7.6 "DRIVE" Implications/Applications 58

7.7 Foreign Military Sales 58

8.0 IMPACT OR INTERACTION WITH OTHER AIR FORCE/DOD INITIATIVES 59

8.1 TAV 59

8.2 IWSM 59

8.3 Contractor Repair 59

8.4 Transportation 59

8.5 Bar Coding for Serial Number Tracking 59

8.6 Standardization Initiatives 59

8.7 DoD Inventory Review Task Force 59

8.8 AFMC Excess Reduction Program 59

8.9 Acquisition 59

8.10 PICA/SICA Relationships 59

Annex A - Lean Logistics Communication Plan 60

Annex B - Terms and Definitions, Acronyms 61

Annex C - Bibliography 68

Annex D - Road Map 72

Annex E - Metrics 77

Annex F - Process Charts 79

Annex G - AFMC Demonstration Plans 80

Annex H - Samples of Output Products from the Data Analysis System 81

LIST OF TABLES

Table 2.1	Lean Logistics Design	20
Table 2.2	Lean Logistics Applicability Air Force Organizational Level	21
Table 3.1	Matrix of Depot Conversion Demonstration Coverage	27
Table 4.1	Lean Logistics Cost Structure	39
Table 4.2	Lean Logistics Design	43
Table 6.1	Metrics for Measurement of the Pipeline Processes	50
Table 6.2	Functional Area Changes	53
Table 6.3	Information System Impacts	56

LIST OF FIGURES

Figure ES-1	Baseline Repair Cycle Time	8
Figure ES-2	Lean Repair Cycle Time	9
Figure ES-3	Lean Logistics Scorecard	9
Figure 3.1	Lean Logistics Implementation Process	33
Figure 5.1	Today's Logistics System	46
Figure 5.2	Lean Logistics System	47
Figure 5.3	Integrated Data Analysis Architecture	49
Figure 6.1	Lean Logistics System	51
Figure 6.2	Pipeline Flow Time Segments	51

Executive Summary

Lean Logistics is an Air Force program that includes a number of complementary initiatives, all focused toward improving operational capability by integrating and applying state-of-the-art business practices across all logistics functions and processes. Lean Logistics provides a logistics system that (1) fully meets mission effectiveness goals given the uncertainty of missions, OPTEMPO, and resulting repair requirements, (2) is more responsive to customers, and (3) is cost effective. The Lean Logistics program is a proactive, deliberate response by the Air Force Logistics community to the massive changes in its operating environment. It is the new cornerstone for USAF Logistics.

Lean Logistics will radically alter logistics functions in the Air Force by improving and streamlining policy, processes, and management structures that drive costs and investments in logistics infrastructure. The end result of these initiatives will be a more robust and affordable logistics system. The future system will be characterized by a smaller logistics infrastructure providing robust, less costly weapon system support to operational users across all mission requirements in war, other than war missions, and peace.

Lean Logistics is being implemented in the Air Force now. This Master Plan identifies those efforts to implement Lean Logistics completely, methodologically, logically, and efficiently. It will ensure that Lean Logistics is implemented in a smart way.

This document is the third draft, baseline version of the Lean Logistics Master Plan It is intended to provide a cohesive, shared vision of the concept of Lean Logistics. It is also intended to provide a comprehensive view of the work to date and the issues surrounding this program. This plan documents the expected likely impacts of Lean Logistics initiatives on USAF capabilities in war/non-war missions and peace, the impact upon operations, and the benefits and costs, and sets out rational expectations regarding Lean Logistics. Finally, it provides a Road Map to implement Lean Logistics within the Air Force during the next several years.

This baseline version is more comprehensive than the previous version; however, some issues remain. This baseline Master Plan provides for the continued implementation of Lean Logistics in a logical structured manner, even as some of these issues are further evaluated.

This Master Plan is an intermediate product, the result of a broad, dynamic master planning process to achieve consensus within the Air Force to allow forward movement on a shared vision. It is, and must be, a living document with periodic revisions expected, especially in the near term. This document and the broader process will help to achieve convergence among potentially disparate views on Lean Logistics.

The process employed to develop Lean Logistics will be used to identify the appropriate Lean Logistics initiatives, prioritize resource commitments for these initiatives, allocate resources consistent with the priorities, and set appropriate expectations about the potential of Lean Logistics. This document will serve as the focal point for documenting all Lean Logistics efforts in the Air Force.

Much of the Air Force initial attention in implementing Lean Logistics focuses on the reparable/serviceable pipeline and efforts to reduce days in the cycle through various initiatives. A summary of that pipeline, along with specific initiatives and how they impact the pipeline is provided below in Figure ES-1. The top portion of the Figure shows the existing average pipeline times as of March 1994 as reported in DO41. At the bottom of Figure ES-1, there are a number of

demonstrations/conversions that are being implemented to evaluate specific Lean Logistics initiatives. These initiatives include:

- Fast transportation to and from the depot or other source of repair
- Expedited DLA processing of reparables to the depot repair shop and serviceables to the bases/installations
- Expedited evacuation of reparables by bases to the depots (R2P)
- Improved timeliness of shop repair processes (no longer batch process) at the source of repair
- Improved contracting for bit and piece support (both Air Force and DLA)

All of these initiatives are intended to reduce the pipeline times to those shown in Figure ES-2.

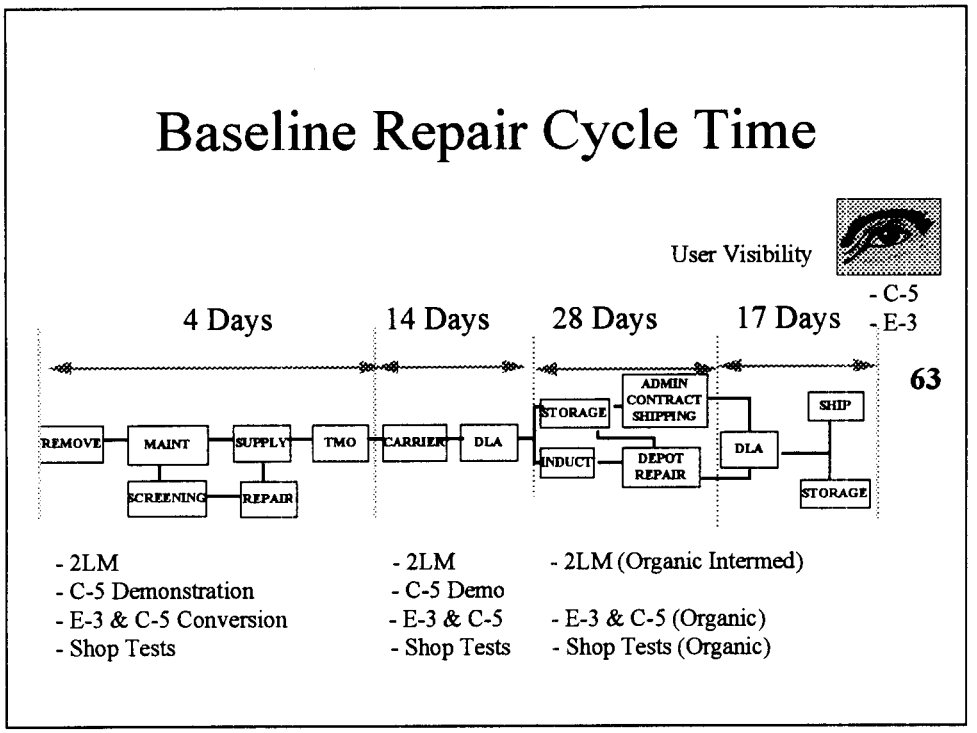

Figure ES-1 Baseline Repair Cycle Time

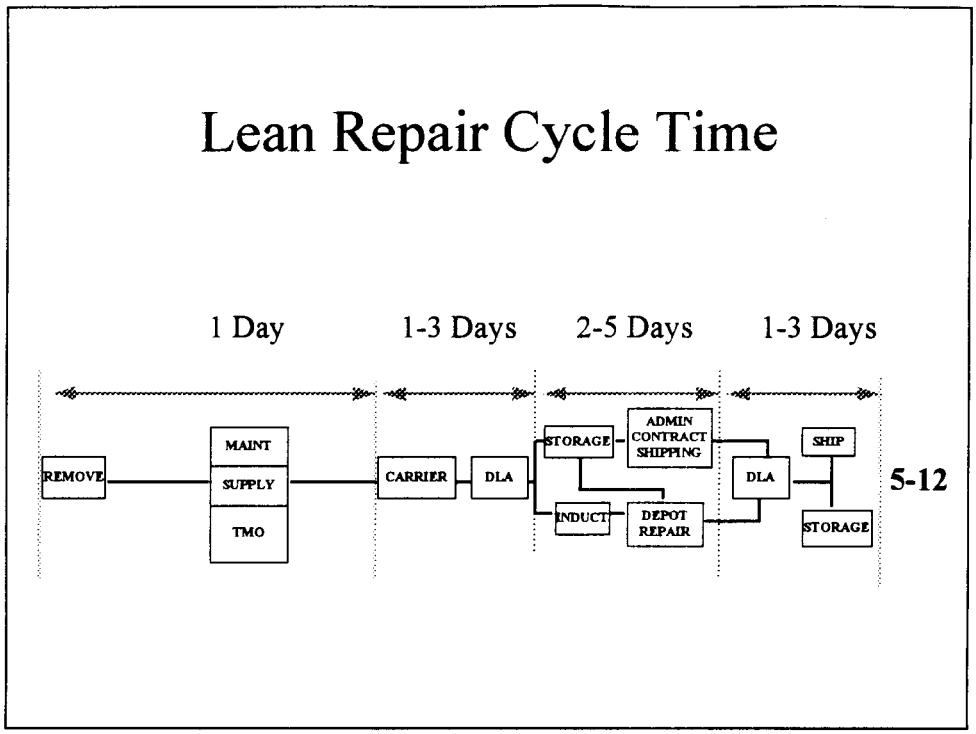

Figure ES-2 Lean Repair Cycle Time

Feedback loops, Lean Logistics system performance metrics, and scorecards are important concepts for the implementation of these initiatives. Figure ES-3 shows one proposed format for a Scorecard on Lean Logistics initiatives. Future versions of this plan will include the appropriate cell entries for the Scorecard on various elements of the progress of Lean Logistics implementation.

Key Element	**2LM**	**C-5**	**F-16**	**C-E**	**Radar/Nav**	**Engine**	**Hydraulics**	**Oxygen**	**E-3**
Cycle Time Reduction									
Express Transportation									
DLA Processing									
Repair on Demand									
Organic									
Contractor									
Consolidated Inventories									
Serviceable									
Raw Materials									
User in Control									
Distribution Decisions									

Figure ES-3 Lean Logistics Scorecard

1.0 Introduction

1.1 The Logistics Challenge

Since the break-up of the former Soviet Union and the subsequent end of the Cold War, a new world order has evolved, fostering a geopolitical environment that finds the (military) role of the United States substantially changed from previous years. Defense posture no longer focuses on a potential major conflict between superpowers, fought in the European theater. The U.S. military is now asked to undertake many more types of missions than had previously received attention. Each service has responded with unique planning, policies, and changes to force structure to support these new requirements.

USAF logistics organizations face major challenges including building and maintaining a high degree of readiness and sustainability, despite substantial decreases in resources available. The threat profiles have changed drastically, causing fundamental changes in warfighting concepts of operation. In many cases, these changes in operational strategies ironically place less reliance on force structure and new weapon systems and forces (which will not be forthcoming) and more reliance on a robust, flexible logistics support system.

1.1.1 New Operational Concepts

The new world order has generated demands for the U.S. military to adjust its forces to accommodate changed threats, with the Air Force playing an ever increasing role through its goal of Global Reach - Global Power (GR-GP). The goals of GR-GP are:

- Sustain deterrence
- Provide versatile combat force
- Supply rapid global mobility
- Control the high ground
- Build U.S. influence

Each one of these implies a strong, flexible support structure.

The evolving environment in the military establishment has caused changes to occur in the planning of operations. Force structure changes are required to support GR-GP. The change in force structure has also brought about a change in tactics—that is, how planning for different missions is carried out. GR-GP implies a flexible and responsive support system. In the post-cold war environment, the Air Force faces a wider array of missions, roles, and scenarios that must be supported. The deliberate, proactive response by the Air Force to the above problems is called Lean Logistics.

A clear shift away from global conflict to (major) regional conflicts—for peacekeeping, humanitarian, or combat mission—places a new requirement on each service to provide responsive robust logistics support. Defense Planning Guidance requires support of two Major Regional Conflicts (MRCs) near simultaneously. This strenuous scenario requires some elements of force structure to exhibit flexibility in swing situations.

The new logistics infrastructure that results from the application of Lean Logistics principles must be responsive to these demands. Asset levels, pipeline operations, transportation, and visibility of the operational situation real time are required to support these activities.

At the same time, the United States finds itself increasingly involved in other-than-war missions-peacekeeping, humanitarian aid, presence, show of force-that also require a flexible and responsive logistics infrastructure. Supporting war, other missions, and peacetime operations must be part of the logistics vision of the future and incorporated into the development, testing, application, and evaluation of Lean Logistics principles.

1.1.2 Uncertainty

The increasing demands placed upon the Air Force by the turbulence of the new defense environment and operational trends result in uncertainty about missions, OPTEMPO, and repair requirements. The Air Force has faced long-standing difficulties in predicting demands (Blazer, 1985; Crawford, 1988) and subsequent repair requirements. Recent discoveries of two-fold changes in demand levels in Operation Desert Storm (Pyles & Shulman, 1992) suggest that this problem is still a major one.

One approach to dealing with uncertainty, some would say the only way to deal with it, is to accept it and develop a response system to effectively manage it. Given uncertainty, developing a more responsive, flexible, less fragile logistics system becomes critical.

1.1.3 New Fiscal Environment

The end of the cold war and the beginning of the new world order has also created a new fiscal environment that has demanded a peace dividend, a significant reduction in resources allocated to defense needs, with other government programs and deficit reduction receiving increasingly more attention and additional resources. Coincident with the reduced budget dollars available for defense needs is a reduction in end-strength throughout the services.

The Air Force has seen its manpower decrease from over 600,000 in 1986 to about 400,000 proposed for FY95. With reduced defense expenditures, the Services have been struggling with extraordinary budget allocation issues dealing with how best to allocate limited resources to force structure, logistics support, infrastructure, and contingencies. Clear guidance requires that the military maintain readiness and its mission effectiveness, and at the same time increase peacetime efficiency of operations and responsiveness to peacetime contingencies.

1.1.4 Department of Defense (DoD) Logistics Support Guidance

The above challenges have created a situation where it is obvious the USAF logistics system must be changed substantially. In addition to these pressures, the DoD has imposed goals and objectives upon the Air Force that also influence the direction of change.

The DoD has responded to this environment and changes in force structure with a recognition that while mission-operational support must be maintained at all times, a more responsive and efficient logistics system is required. Indeed, the DoD Logistics Strategic Plan states that the logistics system mission is "*To provide responsive support to ensure readiness and sustainability for the Total Force in both peace and war.*" The DoD logistics system is mandated to:

- Provide reliable, flexible, cost-effective and prompt logistics support, information, and services
- Achieve a lean infrastructure
- The DoD Logistics System will meet this vision by making selective investments in technology, training, process reengineering (including benchmarking) and employing the most successful commercial and government sources and practices

The DoD Logistics Strategic Plan clearly states three goals, including the following:

1. Reduce logistics response times

"Each day of delayed response to the user represents millions of dollars in inventories waiting to be moved, repaired, delivered, stowed, and used. Slow response times -- (1) are symptomatic of processes that need to be improved, eliminated, or outsourced to high quality providers; (2) often reflect gaps in management information or use of substitute data as an alternative for that which is truly required; and (3) reflect standards that do not challenge logistics managers to maximize their performance."

Response times throughout the supply and maintenance pipelines are the key measures of success in this area. The objectives and strategies required to meet these goals include the implementation of total asset visibility, measure responsiveness at the customer level, and improve strategic, operational, and tactical mobility to support the national military strategy.

There are events beyond the control of the Air Force such as contractors going out of business, technical changes, and unfunded requirements. However, when a lean environment has been achieved, pipeline repair times will be decreased. This will result in less overall inventory requirements.

2. Develop a seamless logistics system

This goal seeks to remove impediments to information flows and the effective execution of related functions within the logistics system. The focus is on the customer and the methodology to achieve success relies upon management initiatives. The objectives and strategies require that Corporate Information Management (CIM) migration and follow-on plans be successful, comprehensive benchmarking be undertaken to support the accurate measurement of improvements, the communication of logistics information be improved, and a set of flexible logistics support options be developed.

3. Streamline the logistics infrastructure

"Reducing the cost and footprint of logistics is key to meeting the DoD's FYDP fiscal targets and providing an optimum tooth to tail profile. Performance is measured through the following:"

- Cost per flying hour or cost per operating hour
- Changes in number of support facilities
- Personnel trends
- Inventories
- Other related indices

The objectives and strategies for developing a seamless logistics system include: using best business practice techniques to reduce inventories, eliminate excess organic depot maintenance activities, increase the use of private sector distribution systems; outsourcing noncore logistics functions; and reducing weapon system logistics support and sustainment requirements through improved hardware technology programs, better recognition of requirements, and selective reorganization of management within DoD to foster changes in infrastructure and provide needed coordination.

1.1.5 Managing Logistics Tradeoffs Through Total Cost Analysis

The goal of the Air Force Logistics System is to meet user needs at least cost. Developing a logistics strategy to achieve that goal depends upon an integrated approach among component functional areas. Inherent in this system are tradeoffs between functional areas that cause changes in policy and decisionmaking when viewed from a corporate rather than a functional perspective. Traditionally, functional areas attempted to optimize individual functional performance without assessing the impact on total logistics performance. For example, transportation policy makers managed asset movement based on minimizing transportation cost within UMMIPS time standards. Unfortunately, traffic management policy decisions were made based on transportation cost without necessarily considering inventory carrying cost impacts.

Effective management of logistics operations requires identification and analysis of the critical tradeoffs between service levels, inventory carrying, inventory purchasing, transportation, warehousing and information processing costs. Service and cost decisions must be based on operational requirements and total logistics costs. Air Force logistics managers should meet operational requirements while minimizing total logistics cost of each functional activity (maintenance, supply or transportation).

1.2 Lean Logistics as a Proactive Response

To deal with these new challenges and pressures for a more cost-effective and efficient logistics system, the Air Force logistics community has developed a proactive response to this new operating environment and to the DoD Logistics Strategic Plan. Planning for change will afford the Air Force the opportunity to institute operating improvements before they are imposed upon the Air Force in a more arbitrary fashion. The Air Force has set out a vision and a strategy to create a new lean logistics system.

1.3 Lean Logistics Goals and Objectives

The overall goal of the logistics system remains the same-- to achieve mission effectiveness and aircraft availability goals while minimizing total (system-wide, life cycle) costs. There is continuing broad agreement that the new Lean Logistics system must provide that responsive support to ensure readiness and sustainability in both war and peace. At the next level, however, the Lean Logistics system goals and objectives are subject to some differences in opinion--differences that naturally lead to alternative design characteristics.

1.3.1 Goals

A logical set of goals to guide the design and evaluation of the new system includes:[1]

- Robustness
- Cost
- Assured operation

The robustness goal reflects a need for the logistics system to meet any demands that might arise, and a more robust system is one that is less sensitive to the specific mix or levels of demands that might arise. The cost goal reflects a need for the system to cost less on a system-wide, life-cycle cost basis. (While overall costs would be less, some individual cost elements might increase.) Finally, the assured operation goal reflects the need to operate smoothly and effectively throughout

[1] Taken from RAND papers and briefings on Lean Logistics.

war, peace, and the transition from peace to war without special, ad-hoc procedures. A system based on simplicity and accountability is required here to deal with the fog and friction that may obscure some parts of the system from others as well as produce disruptions and destroyed resources.

1.3.2 Objectives

To design the system, more measurable objectives are required --to evaluate alternative system designs and to tell what initiatives or design elements are contributing to improvements. These objectives are somewhat controversial but may change over time as necessary to reflect lessons learned during implementation. These objectives should guide the development of the Lean Logistics system:

- Increase responsiveness (contributes to robustness)
- Decrease total costs (contributes to reduced costs)
- Increase simplicity (contributes to assured operations and costs)
- Maintain or increase accountability (contributes to assured operations and costs)

Increased responsiveness implies that if you cannot accurately predict the variability in demands, the next best thing is to reduce the time to respond to them. It involves reductions in cycle times, but also implies that the right (relevant) response is equally important as are attributes of higher quality and more flexible product characteristics.

Decreased total costs implies eliminating non-value-added activities and resources (reduced labor and work-in-process), seeking more efficient sources for some services, and rebalancing resource allocation across functional areas (spares vs. transportation). A result of Lean Logistics is the savings due to decreased inventories for some items, smaller footprint for some items, and other savings.

Increased simplicity suggests reducing process complexity, decision complexity, and reduced reliance on perfect information. Fewer steps, fewer coordination actions, more relevant local indicators, more automatic reporting and information management and less micro-management are all desirable under a Lean Logistics system.

Maintaining or increasing accountability is critical to maintaining cost control/discipline. Sub-objectives include simpler traceability, less stovepiped processes, and resource allocation decisions made by the user or designated agent.

1.3.3 The Results and Risks of a Lean Logistics System

As a result of a Lean Logistics system, a reduction in inventories can be achieved by applying best business practices to speed up the reparable/serviceable pipeline. A pipeline that cycles parts faster requires fewer parts in the system. Another result of a Lean Logistics system is a consolidation of serviceables for immediate redistribution, which can save/reduce inventory requirements.

Some of the initiatives in Lean Logistics may experience increased cost, such as premium transportation and less efficient repair procedures at the depot. These incremental costs are more than offset by the benefits of increased mission effectiveness and customer responsiveness as well as the savings obtained from reductions in inventories, the key driver of Air Force logistics costs. However, transportation costs and any increase in the cost of repair would logically be a recurring

cost while the savings from inventory reductions would manifest itself in a one time savings or cost avoidance.

There are potential risks inherent in some Lean Logistics initiatives. Reducing inventory only without process improvement can have a negative impact upon capability. Over-correcting for long pipelines across all items may be a mistake for some items. Potential supply pipeline disruptions are a valid risk point within Lean Logistics. When the system is operating just-in-time, there is less insurance (in the form of stocks) against these disruptions. Applying Lean Logistics approaches to all components based on results with a limited range of items without fundamental changes to the underlying processes or without selecting critical problem areas to focus upon is a mistake.

1.4 Lean Logistics Master Plan

This Master Plan is necessary to guide the process of implementing Lean Logistics throughout the Air Force. It places into perspective the various studies that have been completed as well as those that are ongoing, the AFMC shop and pipeline demonstrations, transportation, asset visibility, and other initiatives. It provides a framework to estimate costs and benefits of Lean Logistics and makes the formal links from peacetime-efficiency improvements to mission and wartime-effectiveness requirements.

1.4.1 The Need for a Master Plan to Guide Lean Logistics Implementation

While the premise for Lean Logistics is relatively straightforward and logical, its implementation has many integrated facets. It is imperative that a structured implementation plan be developed that can guide the Air Force through the process, help identify bottlenecks, measure impacts, and provide a mechanism for periodic adjustments, etc. This Master Plan and Road Map serves as that vehicle. It is intended to guide implementation in a logical and consistent manner using feedback from the implementation itself to make the necessary adjustments. It informs everyone of the approach, the progress, the problems, and the solutions that are being implemented. It eliminates the potential for confusion, misunderstanding, or misrepresentation of Lean Logistics.

1.4.2 Master Plan Goals and Objectives

The goal of this Master Plan is to provide a single document that describes the goals, objectives, and scope and scale of Lean Logistics implementation within the Air Force. The Master Plan and Road Map carefully and critically describe the actions required to implement Lean Logistics with appropriate schedules and timelines. It provides an agreed upon motivation for Lean Logistics and the logistics vision for the Air Force. It is a central repository for combining prior research on these issues, along with several proposals for additional efforts. The Master Plan concept assures that the entire Air Force structure understands where logistics activities are directed. The plan also provides a mechanism for periodic updates to changes in the logistics vision or applications, distribution of information important to the implementation process, and reduction or elimination of any confusion about these processes.

1.4.3 Master Planning Process

This Master Plan and Road Map should be viewed as an intermediate output of the overall Lean Logistics master planning process. This process is designed to be dynamic and, in the spirit of continuous process improvement, the results and the process are evolving. It is important that this Plan, Road Map, and the entire Lean Logistics program be viewed as evolutionary.

As the results of the AFMC shop conversions are processed and lessons learned produced, they will feed back into the implementation and system design. Systematic and comprehensive analyses of the ramifications of alternative designs, policies, and processes must continue in parallel with the implementation of Lean Logistics. The results of these analyses will modify the Lean Logistics system design and the implementation plan.

The Master Plan and Road Map is the device to manage the diverse actions that must be accomplished to successfully implement Lean Logistics. Therefore, part of the job of AF/LGM-2 is to be aware of, document, and provide support on any Lean Logistics initiative in the Air Force and to document and apply lessons learned from these efforts to future efforts.

The master planning process will continue to collect, document, evaluate, and draw lessons learned from all Lean Logistics initiatives. This includes activities at the MAJCOMs/FOAs, AFMC/LG-LL and AFMC depots, AFLMA, RAND, and other organizations involved in this broad program. LGM-2, as part of this process, will continue to be a repository for all relevant documentation relating to Lean Logistics efforts and make every effort to distribute the right Lean Logistics information to the community at large as well as the specific organizations/individuals involved in the program.

LGM-2 will ensure that it maintains a dynamic Master Plan and Road Map. This includes helping to ensure that any activities done under the name of Lean Logistics are undertaken in a manner consistent with the overall direction, goals, and objectives of Lean Logistics and contribute to the Air Force's implementation of Lean Logistics. What needs to be done, who needs to do it, and when, will be monitored and worked in LGM-2. As implementation lessons learned become available, LGM-2 will disseminate them and use them to influence the direction of future efforts to avoid unnecessary duplication or reinventing of the wheel. A Lessons Learned Supplement is attached to this version of the Master Plan. It includes information from the C-5 demonstration, the C-E demonstration, and the B-1 ORA. In addition, that supplement also includes a checklist of actions to be taken at all levels within the Air Force to implement specific initiatives of Lean Logistics.

2.0 Lean Logistics Background and Concepts

Lean Logistics is an umbrella concept that describes the application and adaptation of the most successful public and private business practices to the USAF logistics system. These technological and management innovations that have been proven by other organizations facing turbulent market demand can be adapted in many cases to USAF logistics processes. The resulting logistics system will be more effective, i.e., more robust and flexible, and more efficient and affordable. This section describes the background and elaborates on the Lean Logistics concepts.

2.1 Genesis of Lean Logistics[2]

The Lean Logistics concept was developed by the Air Force and RAND's Project Air Force. This concept evolved over some time. The idea of Lean Logistics was based upon RAND Project Air Force research that began in the Fall of 1991 at Lt Gen Trevor Hammond's request. The actual research questions were formulated by Mr. Grover Dunn (AF/LGSW) as more and more emphasis was being given to the need for the Services to adopt new business practices to meet the challenges of the new environment. The intent was to take an unbounded look at any and all innovative organizational or process changes that might transform the USAF logistics system to meet future challenges.

The business practices work began in earnest in the winter of 1991-1992, and was intentionally kept at a conceptual level, using interviews with senior AFLC (and later, AFMC), MAC (later AMC), and HQ USAF General Officers as a research device to elicit comments and feedback. By early summer, a conceptual design consisting of six thrusts had been developed, which still constitutes the framework underlying USAF Lean Logistics. These six thrusts were:

- User-in-control
- More responsive base and depot operations
- Organic/non-organic competition
- Reengineered depot shop flows
- Enhanced Integrated Weapon System Management (IWSM)
- Continuous process improvement

At one of the feedback sessions, Gen Yates encouraged RAND to work out the details with the second thrust--more responsive base and depot operations. Out of that effort, analyses were undertaken and a strawman design was completed. The feasibility and effectiveness of shortening flow times as well as the benefits of increased authority and responsibility on the part of the MAJCOMs were included in these efforts.

On 12 January, 1993, the design and initial evaluation were briefed at RAND's Washington office to Maj Gen Nowak (then USAF/LGS) and senior supply and maintenance colonels and GS-15 civilians from AFMC, ACC, AMC, AETC, HQ USAF, and AFLMA. As a result of that meeting, Maj Gen Nowak created a Lean Logistics transition team, consisting of key colonels from those commands to develop plans to begin the transition. At the meeting, Col Van McCrea, ACC/LGS, coined the term Lean Logistics.

---

[2] This revised version of the genesis of the Lean Logistics program is based upon information provided informally by Mssrs. Ray Pyles and Frank Camm, of the RAND Corporation. We welcome comments from other reviewers who might have been there at the inception to help us piece together the historical facts on the history of Lean Logistics.

A series of internal Air Force meetings followed and the transition team was convened in March. Preliminary plans were made at that meeting for applying Lean Logistics concepts to the B-1B and the C-5.

At the same time, AFMC had undertaken a wide-ranging Theory of Constraints (TOC) review of their current operations and had identified a range of potential changes to the AFMC logistics processes that they felt constituted the essence of the changes they wanted to incorporate under the Lean Logistics umbrella. These efforts grew up somewhat independently from the original goals and objectives of Lean Logistics as envisioned by RAND, but they logically fit and thus were subsumed under the Lean Logistics umbrella. AFMC's focus on the TOC was the Air Force Repair Cycle from a weapon system, through transportation, through depot/contract repair, redistribution, and eventual use.

The Two-Level maintenance concept was selected as a model for Lean Logistics concepts. Now being implemented within the Air Force for avionics and some engines, it is regarded as a subset of the full range of activities that are now considered to be part of the Lean Logistics program

2.2 Lean Logistics Concepts

Lean Logistics as a concept was first developed in the world of production.[3] The concept borrows heavily from integrated lean production management practices that were adopted in the automobile industry as an alternative to mass production. These management practices involve not just classic manufacturing, but also distribution, responding to customer demands, inventory policies and all other aspects of the broad product process.

This lean production orientation has application to logistics systems in general and specifically to USAF logistics. It implies tighter integration of business and production processes, smaller production runs, designing for smaller footprint, quick transportation, repair to demand, etc. Developing just-in-time logistics will make materiel management and distribution processes more responsive.

USAF Lean Logistics is an application of best business practices with the following tenets:[4]

- Increase the involvement of the operational commands in logistics processes since these processes directly affect weapon system readiness and sustainability
- Develop just-in-time logistics to make materiel and distribution processes more responsive and reduce inventories and management intervention
- Tighten repair and manufacturing (repair on demand, reduced inventories, low overhead, customer driven supply)
- Expand IWSM so that Lean Logistics concepts are designed into new acquisition
- Embed continuous improvement so that small high visibility groups throughout the Air Force will continuously assess performance and initiate improvements (Continuous improvement includes not just logistics processes but Reliability and Maintainability initiatives for DLRs.)

---

[3] The term Lean Logistics is taken from the term Lean Production as used in *The Machine that Changed the World*, by James P. Womack, Daniel T. Jones, and Daniel Roos, a book describing innovative management practices in the automotive industry.

[4] *Lean Logistics: A More Responsive, Robust, and Affordable System, Executive Summary*, by I. K. Cohen, R. A. Pyles, and R. A. Eden, draft May 1994 Rand Corporation: Santa Monica, CA.

2.2.1 The RAND Lean Logistics System

The principal features of Lean Logistics developed by RAND that are related to the first three original basic thrusts follow.[5]

1. Streamline depot flows
    - Drastically reduce transportation times by using commercial air express to the fullest extent possible
    - Drastically reduce repair times by eliminating non-value-added steps in receiving, funds transfer, scheduling, storage, distribution, and shipment (e.g., ship directly from contract or organic shop to field)
    - Assure sufficient depot shop capacity to achieve flow times less than 3-4 times hands-on times
    - Integrate the depot repair loop, with maintaining accountability and critical supply at regional transportation hubs
2. Streamline base flows
    - Use direct exchange to simplify base receiving, shipment, and accountability
    - Move accountability to the user (flightline for LRUs, back shops for SRUs)
    - Use Repair and Return Packaging (R2P) to simplify, improve accuracy, and improve accountability for retrograde material flows
    - Streamline depot support for SRUs to minimize flow times for base level component repair
    - Improve consumable support for the same purpose
3. Enhance military control of logistics operations
    - Make total base and depot requisition stock levels match available assets and requirements
    - Empower MAJCOMs to allocate available asset levels within their own commands (to assure depot repairs and requisition fills support most important missions) (even when missions cannot be formally declared)
    - Empower MAJCOMs to negotiate fair share allocations of common resources (shops and spares) with other Commands
    - Empower MAJCOMs to negotiate performance levels (quality, responsiveness, etc.) with AFMC
4. Simplify financial management
    - Unbundle the non-maintenance expenditures in AFMC [i.e., pay depot shops (contract and organic) directly]
    - Move point of sale to the MAJCOMs so shops delivering repair items receive direct payments to their DMBA (i.e., repair to demand, receive payments for prompt repairs)
    - Eliminate the RSD fund and its extra financial transfers

2.2.2 Current Air Force Design

Not all of the elements of the RAND design have been tested nor is there unanimous agreement that all of the elements should be in the ultimate Air Force Lean Logistics design. Table 2.1 shows the current design concept for Lean Logistics in the Air Force. Chapter 4 of this Plan

[5]There are other aspects of the RAND design which are not elaborated upon here. For example, the creation of Command Supply Centers and their functions and operations are presented in their work.

raises design issues that require resolution before the ultimate design can be finalized. None of the issues discussed in Chapter 4 impede ongoing implementation efforts in Lean Logistics. The evaluation of specific issues can proceed in parallel while the agreed to design elements are implemented.

Table 2.1

Lean Logistics Design

Function	Current Air Force Design
Serviceable Inventory	Consolidated (called CSI)
Raw Materials Inventory	LRU, SRU, Bit/Piece
Inventory Location	
Serviceables	Source of Repair
Reparables	Source of Repair
Transportation	
Critical Items-Short Supply	Express
Critical Items-Long Supply	Express
Distribution	Expedite Receiving
Shop Induction	Fill CSI Holes
Base Reparable Evacuation Time	Fast (2 days in many cases)

2.2.3 Continuous Improvement

The implementation of Lean Logistics is an iterative process and will require continuous improvement over time. A phased implementation of sequential goals implies that lessons learned, feedback loops from demonstrations, tests, and analyses will continually modify and improve the system design. Coordinating bodies are required to guide the complex set of initiatives.

The current mechanisms include the Logistics Board of Advisors -- chaired by the DCS/LG and including the LGs from all the MAJCOMs --for senior LG decisionmaking guidance and the Lean Logistics O6 working group, composed of the Air Staff and MAJCOM LG functional directors (LGS, LGM, LGT, etc.). AF/LGM-2 is the executive agent at the Air Staff whose responsibilities include ensuring that the initiatives are implemented in accordance with guidance from these groups. Many specific actions will be led by the MAJCOMs/FOAs.

The Air Force master planning process supports continuous process improvement that provides a structured, time-phased, integrated approach to implementation of Lean Logistics principles. Included in this Master Plan is a Communications Plan that explains Lean Logistics to all affected parties and a Road Map that facilitates periodic performance reviews as implementation proceeds. This Master Plan is a living document, and will change over time as concepts are developed, applied, evaluated, and modified. It ensures that the Air Force as a whole fully understands what Lean Logistics is, where it came from, how it affects Air Force operations, and how it is evaluated.

2.2.4 Cross-Functional Processes

Lean Logistics is inherently cross-functional. The benefits can only be derived by focusing on improving end-to-end processes that cut across traditional functional lines. Suboptimization of subelements of the process may be counter-productive to the goals of Lean Logistics.

The current implementation efforts for Lean Logistics concepts focus primarily on DLRs[6] and cover initiatives in supply, maintenance, transportation, and contracting. In the future, it is clear that Lean Logistics must incorporate other items plus research and development, acquisition, and financial management initiatives. Lean Logistics affects operations at the base, depot, MAJCOM, and headquarters levels. It affects fixed-wing aircraft operations and missiles, munitions, communications-electronic equipment, PMEL, etc. Currently, there are initiatives that cut across these functional areas and others that are confined to only one area.

Moreover, Lean Logistics concepts have different applicability depending upon the level within the Air Force organization—base, depot, or HQ. Table 2.1 shows the coverage of Lean Logistics concepts given some of these dimensions. The cell entries are Lean Logistics initiatives or programs. There is a third dimension that is not shown in the table. Support to the functional areas at all levels is greatly affected by R&D, acquisition policies and procedures, and financial management. As Lean Logistics is implemented, these areas will be reviewed and evaluated to determine how improvement to their operations can affect the Lean Logistics environment (and specifically what Lean Logistics requires of these support elements). In addition, reliability and maintainability investments as well as investments in improved production equipment will have a major impact on inventory requirements, pipeline operations, etc.

Table 2.2
Lean Logistics Applicability
Air Force Organizational Level

Function	Base	Depot	HQ
Supply	Pipeline[7], ATAC-AF	Pipeline, ATAC-AF	Acquisition
Maintenance	Pipeline, 2LM, ATAC-AF	Pipeline, 2LM, ATAC-AF	
Transportation	ATAC-AF, R2P, AMX	ATAC-AF, R2P, AMX	ATAC-AF, AMX

A potential result of Lean Logistics, in terms of cost savings or cost avoidance, is found in shrinking the reparable/serviceable item pipeline. Policies and procedures can reduce the time that a reparable or serviceable part flows through the pipeline and potentially yield improved mission support and substantial reductions in required inventories. Many of the Lean Logistics initiatives focus directly on reducing the pipeline. Included here are direct induction at the depot, improved base processing of repairs and NRTS items, express transportation, improved piece part support in maintenance, and consolidated inventories (both reparable and serviceable).

Lean Logistics also affects logistics plans and wartime planning and execution. As one example, mobility plans may be affected substantially by the results of the Lean Logistics initiatives. These areas are just now beginning to be explored.

---

[6] AFMC is also focusing attention on the PDM process and attempting to apply Lean Logistics principles there.
[7] Pipeline process improvement demonstrations as conducted by AFMC through the ALCs.

3.0 Lean Logistics Initiatives and Issues

3.1 Two-Level Maintenance

The Two-Level Maintenance (2LM) initiative in the Air Force converts maintenance for avionics and engines to 2LM from three levels of maintenance (O, I, D) by using modern communications, computer controls and transportation systems to rapidly move unserviceable parts through the repair process. 2LM results in significant reductions of people, facilities, equipment and spare parts associated with I-Level maintenance at the unit level.

A SECAF-directed study was undertaken in March 1992, driven by fiscal constraints in FY94 and beyond. It looked at implementing 2LM where it made economical and readiness sense and focused on costs, savings, and impacts. In July 1992 a decision was made to proceed. In December 1992 the program became an approved Defense Management Review Decision (DMRD 983). Cumulative savings to the Air Force and DoD through FY99 were estimated to be $384.9M.

A series of tests, called CORONET DEUCE for avionics and CORAL THRUST/CORAL STAR for engines were conducted over the last few years. Pipeline times for avionics have been reduced significantly while engine repair processes have made less progress.

During FY94 avionics for the following weapon systems were processed in the 2LM program: A-10, B-1, B-52, C-5, C-130, C/KC-135, C-141, E-3, F-15, F-16, F-111. Engines included the TF33-103, TF33-7A, TF33-100, F100-220, F-108, and TF30-109. During FY95 avionics for the H-53 and H-60 will be added and the following engines: TF33-102, TF39, T56, and TF30-111.

Avionics repair has shown consistent improvements under 2LM, although NRTS rates have been less than predicted and thus the workload for repair at the depot less than predicted. This phenomenon is caused by DBOF pricing policies and general funding constraints. Engines to date have shown mixed results. Pipeline times for the TF33-7A, TF33-103, TF33-100, F108-100, and T56 seems to be improving but the F-100-220 and TF39 still exceed standards. Engine generations, especially for the TF33-7A, TF33-103 and the F-100-220 are well below predicted values.

3.2 DLR Ownership

Air Force Chief of Staff (CSAF), dated 15 April 1994, directed the development of a demonstration program for DLR ownership at the 1FW, Langley AFB. The demonstration was to last from 1 July through 31 December 1994 and determine if DLR ownership (pride of ownership) using serialized control practices leads to increased reliability and decreased cost per flying hour (CPFH). Prior to the demonstration, a wing may or may nor receive back from the depot the serialized LRU it sent as unserviceable. Distribution of the serviceable followed UMMIPS and MILSTRIP procedures. If the LRU were returned to the wing that sent it to the depot, the crew chief might have a more vested interest in its reliability. 39 stock number were included in the demonstration. The 1FW was given its fair share of world-wide assets (capped at current levels). SWA deployed assets were not included in the demonstration. A control group, the 325FW at Tyndall AFB, was used to determine if any improvement or degradation of support was the result of DLR ownership or other factors such as use of Lean Logistics principles (fast transportation, direct induction into repair at the depot). The key metrics tracked during the demonstration were: mission capability, MICAP rates, CND, pipeline times, NRTS rates, and CPFH.

Mid-term review indicated that the Lean Logistics aspects of DLA ownership were successful and should be continued. Total pipeline from time of requisition to time of receipt was reduced by

approximately two days. However, the rules of fair share ownership and no lateral support did not support the mission of the 94th fighter squadron when they were tasked to deploy Saudi, Arabia. Assets were required to either fill the MRSP or fix jets which required Langley to fill these requirements through lateral support or obtain serial numbers other than their own.

Currently, the tracking and repairing of DLRs by serial number is labor intensive as double-entry bookkeeping is required. To implement further would require major re-engineering of data systems which in our opinion would not provide the benefits expected. Meantime between failure and repair data is inconclusive at this time.

Based on data collected thus far, and the fact that ownership makes robusting a unit to combat capability cumbersome, a recommendation was made to terminate the demonstration and focus efforts on improving Lean Logistics initiatives.

3.3 C-5 Lean Logistics Demonstration

This demonstration enforced major command distribution to wings and depots. Specifically, the C-5 Lean Logistics demonstration evaluated the concept of operating a central storage facility (CSF) located at Dover AFB and a command supply center (CSC) at AMC to monitor 24 NSNs at six C-5 bases. The intent of the demonstration was to speed up the pipeline for reparables and serviceables and have the command maintain control over the operation. This demonstration did not focus on improvements in depot-level shop repair processes, nor did it test/evaluate common parts with other MAJCOMs' weapon systems. It also did not change the point of sale. Success criteria for this demonstration focused on pipeline times and issues effectiveness for the selected NSNs.

Consideration was given to opening a second CSF at Travis AFB. However, the complications of operating the CSF at Dover have led to a plan for closing the CSF at Dover and locating the consolidated serviceable inventories at the source of repair (similar to the other shop demonstrations). These complications resulted because SBSS was not designed to be a wholesale requisition and distribution system.

3.4 Communications-Electronics Lean Logistics Demonstration (SM-ALC/AFC4A)

SM-ALC Space and C3I Systems Directorate is conducting two demonstrations. The first is a total pipeline demonstration for 109 ATCALS components. Of the 109 components, there are 17 single point failure items. The systems include the GRN-19, GRN-20, TRN-26, TRN-41, GRA-120, GRA-121, FRN-43, FRN-44, FRN-45, and others. The total pipeline demonstration alters depot processes to provide direct induction into repair, establishes a consolidated serviceable inventory located at the source of repair, and employs express transportation to move serviceables from the ALC or CSI to the unit and to move reparables from the unit back to the ALC. This demonstration has not yet focused on improvements in the actual depot-level shop repair process. The second C-E demonstration is that of the partial pipeline and includes 783 items from selected systems (GPN-12, GPN-20, GRN-29, FRN-43, FRN-44, FRN-45) and focuses on use of the CSI and express transportation but does not employ changes to depot repair priorities. The major difference between the total and partial shop demonstrations is that the partial shop does not include all items in the shop as Lean Logistics elements. The shop still does MSTER/DRIVE negotiation for repair.

The success criteria for the C-E Lean Logistics demonstration include savings occurring from reductions in new procurement, savings from reduced storage costs, and savings from process improvement -- all of which must be evaluated relative to any increased costs of implementing Lean

Logistics concepts. Other success criteria include CSI issue and stockage effectiveness, and ineligible withdrawals.

The process improvements for this demonstration include direct induction, DLA pre-positioning of bits and pieces, express transportation. It has not yet focused on shop improvements. to be determined later. This demonstration is also important in determining how to set serviceable levels at the bases and the CSI for low demand (or no demand) items.

There are three generic categories of metrics: (1) pipeline segment (times), (2) effectiveness and performance (issue effectiveness, Q/A, NMCS, RSP fills, etc.), and (3) cost (DLA handling, express transportation, etc.). The pipeline time segments will be tracked by the AFLMA visibility tool and ATAC-AF. The effectiveness and performance metrics will be tracked by local tracking systems, D041, and WSMIS. The cost calculations will be made with data from the DLA, budget, and production reporting systems.

More detail on the SM-ALC demonstration is provided in Annex G which contains the demonstration plans for each of the ALCs.

3.5 Radar-Navigation Shop Demonstration (WR-ALC)

The WR-ALC demonstration includes 74 NSNs of which 29 are LRUs (19 are two-level maintenance items) and 45 SRUs. The systems include the ASQ-141 (KC-135), the AL-101 (E-3A) and the FD-109 (C-130). The process improvements that will be examined in this demonstration include induction into repair based on requisitions to the CSI, prioritization of repair/distribution using DRIVE (when in a constrained mode), express transportation, tighter materiel movement standards, and computer modeling of shop processes.

Performance metrics include CSI issue effectiveness with a goal exceeding 90 percent and smaller inventories. There are numerous pipeline metrics (times) also measured with special emphasis on order and ship time (base requisition to receipt of asset), retrograde pipeline time (Not Reparable This Station (NTRS) action by customer to receipt of reparable asset at depot), and depot repair time (depot receipt of reparable to turn in of serviceable by maintenance for shipment/storage). Ineligible asset withdrawals, inventory levels, and transportation and shop repair costs will also be baselined and measured.

Tools to be used to collect data for metrics include Smart Shop reporting costs, repair and AWP times, and the AFLMA visibility tool which isolates pipeline times, identifies constraints, and monitors depot CSI levels.

3.6 Oxygen Systems Shop Demonstration (OC-ALC)

The oxygen shop at OC-ALC includes 23 master NSNs and 69 actual NSNs in the demonstration. The items include the MD1 regulator, the A21 regulator and the F15 and F4 LOX converters. These items are high demand, relatively low technology, and relatively low cost. OC-ALC will employ both a CSI and Raw Materials Inventory (RMI) at the source of repair. When a requisition is issued, a reparable will be immediately inducted into repair at the depot (not wait for the reparable to be shipped from the base to the depot). Process improvements include a central receiving activity, express transportation, induction based upon base NRTS transactions, and computer modeling of shop flow process to determine potential improvements. Visibility of issues from the CSI is critical. HQ AFMC, AFLMA, and OC-ALC are leading the effort to develop a CSI visibility tool.

Success criteria for this demonstration include CSI issue effectiveness, CSI fill rate, AWP identification, and transportation and shop times. The major metrics also include induction process time. Transportation times include CSI to base and base to depot. Data collection will be supported by the AFLMA visibility tool, the B-1 Enable program for shop flow times, and D035A and AFLMA visibility for CSI levels computation.

3.7 F-16 Avionics Consolidation Demonstration (OO-ALC)

OO-ALC is performing a multi-phased demonstration of Lean Logistics concepts. Phase I uses CORONET DEUCE NSNs and implements a CSI at Ogden ALC with fast transportation to evaluate impacts on the pipeline. A new DRIVE algorithm will be used to determine what LRUs to be repaired. Electronic interfaces and an automated express table along with prepositioning will be implemented. Phase I will use DRIVE to set base levels, collect data for metrics evaluation and clean up the requisition file. Phase II will develop and implement process improvements for the additional shops to be evaluated, expand the Material Tracking System (MTS) and Desktop DRIVE (DTD), expand express table and prepositioning use, and validate the DRIVE data. Phase III will add more NSNs/shops that use DMMIS to track the repair process. In this Phase, the interface between DRIVE and DMMIS will be developed, contractor repaired NSNs will be added to the demonstration, and the interfaces between the contractor and DRIVE will be made.

Success criteria for this demonstration will include ability to support the customer (with operational metrics), inventory savings (number of assets required before and after the demonstration), and costs savings to the Air Force.

Process improvements will focus on the express table, prepositioning, floating stock availability, changes in repair shop teamwork to stop batching processes, changes to the shop layout to support job routing improvements, and other component support improvements including funds balancing. Key metrics include pipeline times, AWP incidents, hours, and reasons, number of assets in the repair process by condition.

3.8 Electronic Engine Controls Demonstration (SA-ALC)

This demonstration will be phased-in with a start date of January 1995.. The demonstration covers ten master NSNs and about 25 NSNs inclusive. The components include the voltage regulator and speed switch for the GT-165-1, the exciter and fan generator for the TF-39, the exciter for the F-100, and the exciter and T.D. amp for the T-56.

This demonstration presents unique issues since considerable back shop support is provided in the repair of these components.

Success criteria include: improve customer support through CSI issue effectiveness and improved depot repair and response time, pipeline reduction, inventory reduction, repair on demand, and visibility of the CSI and RMI levels.

Process improvements to be demonstrated in this test include direct induction of reparables, DLA pre-positioning of bits and pieces, express transportation, expedited movement of assets from shops to DLA, and in-shop repair and processing improvements.

The key metric to be tracked in this demonstration is the issue effectiveness of the CSI. Supporting metrics include depot repair flow time, asset handling and movement time, and other complementary metrics.

Tools to be used to collect data include Smart Shop and the AFLMA visibility tool for pipeline times.

3.9 Hydraulics Shop Demonstration (SM-ALC)

This demo is still in the planning phase. The demonstration covers XX master NSNs and about XX NSNs inclusive. This shop is also affected by the E-3's Lean Logistics efforts.

Tools to be used to collect data include Smart Shop and the AFLMA visibility tool for pipeline times.

3.10 E-3 Weapon System Conversion (OC-ALC)

Although the E-3 weapon system has met or exceeded its aircraft availability goals recently, the recent WSPAR identified a number of areas of concern, including negative trends in TNMCS and break/fix rates. In addition to providing technology insertions and modifications aimed at R&M improvements, applying Lean Logistics concepts to both component repair and PDM is now warranted. The plan is to implement Lean Logistics for the entire weapon system (as opposed to a single shop) focusing on: reducing MICAP drivers, implementing repair on demand, expediting distribution, using express transportation for the movement of critical items to and from the source of repair, and improved contractor support for specific items.

Improvements to the PDM cycle include changing the interval between PDMs, reducing the cycle time of PDM, and thereby reducing the number of aircraft in PDM at any one time. Shortening the PDM cycle depends upon improved availability of parts. Responsive contracting for parts, early identification of problem parts, and demand driven supply are key elements here. Improvements in the maintenance process occur through kitting by task and multi-skilling.

The planning for this demonstration began on 1 December 1994. Additional details of the implementation of this weapon system conversions to Lean Logistics are being developed at this time.

3.11 Shop Demonstration Comparison and Issues

3.11.1 Shop Demonstration Comparison

The current demonstrations are an integral part of the implementation plan for Lean Logistics. They provide sufficient variability in their design, measurement, and operations to be able to draw specific conclusions both about the impact of Lean Logistics in the Air Force and the most effective methods of conversion and implementation throughout the Air force. Table 3.1 shows some aspects of coverage across the five demonstrations.

Table 3.1
Matrix of Depot Conversion Demonstration Coverage

Characteristic	Ogden	Oklahoma City	Sacramento	Sacramento	Warner-Robins	San Antonio	San Antonio
Component Characteristics							
Type	F-16/CSI	A/C	C-E	Hydraulics	Radar/Nav	C-5	Electronic Engine Controls
Number of NSNs		65	100+ full, 700+ partial		74	TBD29 (Phase I) 80 (Phase II)	
High/Low Tech	High	Low	High		High	Combination	
High/Low Demand	High	High	Low		High/Low	Combination	
High/Low Unit Cost	High	Low	High/Low		High	Combination	
Depot Repair Process							
Induction Based on	DRIVE	Demand	Req from CSI		Req from CSI	Demand	
Depots Repairing	OO	OC	SM		WR	All except WR	
Shops Repairing	4	1	1		1	Many	
Contractor Repair	Phase III	No	Yes		No	Yes Phase I/Phase II	
Bit & Piece Procurement	DLA		Minimal		Rapid/Fast	YesPhase II	
LRU & all SRUs						YesPhase II	
Component Storage							
Reparables, Location	SOR	SOR	SOR		SOR	SOR/Contractor	
Ineligibles Set Aside	No	No	Yes		Yes*	Yes	
Serviceables, Location	CSI	CSI, SOR	CSI, SOR		CSI, SOR	CSI,SOR CSF, Dover, Travis for Phase II	
Ineligibles Set Aside	No	Yes	Yes		Yes	Yes	
Levels set by	DRIVE	67-1, Users	67-1, Users		67-1,	67-1, Users	
RSP Levels Filled	Yes	Yes	Yes		Yes	Yes Phase II	
Transportation							
Express	Yes	Yes	Yes		Yes	Yes	
User Community							
Users	AF, Guard and Reserve	Most Commands, Army, Navy, Coast Guard, FMS, FAA, NASA	AF, Navy, Army, FAA, FMS, NASA, Other		AF, 100 locations, Guard and Reserve	AMC, Guard, Reserve, AETC	

* after lean levels are set

Source: Lean Logistics Briefing, OO-ALC/FMDR; Briefing - OC-ALC Shop Test by OC-ALC/FMIRD; Lean Logistics Briefing - WR-ALC, Point Paper on the Robins Lean Logistics Radar Navigation Shop Test Plan, Radar Navigation Shop Service Test Plan by WR-ALC; Communication-Electronics Lean Logistics Pipeline Conversion Plan, Draft, 12 July 1994, Briefing by Duane Podhola on Conversion Plan, accompanying paper; C-5 Lean Logistics Test Plan and Update Briefing.

Six of the demonstrations concentrate on how an entire repair shop would operate in the Lean Logistics environment (Oklahoma City, Warner-Robins, Sacramento, San Antonio ALCs). One demonstration focuses on four avionics shops and pipeline processes (the F-16 at Ogden ALC).

Annex G to this plan provides additional detail about each of the ALC demonstrations. Included there is a flow chart of the processes to be emphasized and monitored during the demonstration, along with any unique metrics (and their definition) used by the ALC. These demonstrations began approximately October 1, 1994 and are scheduled to be completed by April 1, 1995. Extensions are possible if variations in the implementation of Lean Logistics initiatives becomes necessary. As the demonstrations proceed and the results evaluated, the Air Force will add additional shops and processes to the Lean Logistics conversion process based on the lessons learned from these initial demonstrations.

3.11.2 Shop Demonstration Issues

There are a number of issues that pertain to the shop demonstrations that require specific attention as the Air Force moves to a Lean Logistics system. These issues must be addressed successfully if the user community is to experience improved reparable/serviceable processing and attendant logistics support, likely resulting in some inventory reduction without sacrificing mission effectiveness.

3.11.2.1 Responsive Depot Repair Processes

Depots must re-engineer their repair, processing, and other functions to improve their effectiveness and efficiency in support of Lean Logistics. All repair items are directly inducted based upon a valid requirement as determined by the CSI level. AFMC, DLA, and MAJCOMs are trying to develop a system which will automate tracking parts consumption and reordering. [8] Actions must be taken to provide appropriate piece parts to support repair. One of the six thrusts of RAND's Business Practices Study is, "Tighten repair and manufacturing so that management is simplified, non-value added actions and indirect labor are reduced, and 'repair-on-demand' can be implemented with small amounts of systemwide stocks."[9] These actions require some fundamental changes in the way depots now do business. Several depots have efforts underway to formally process re-engineer their operations. Depot maintenance processes have been continuously improving over time; however, the measures of success are now changing. Evaluation tools to support these efforts exist and several different ones are being used in these efforts. A formal review of the tools and techniques available to support these efforts is desired, with the potential result of AFMC and DLA suggesting one standard set of techniques to be used across all ALCs.

Initiatives that streamline non-value-added activities before, during, and after repair need to be explored. The issue of capacity requirements must be addressed. Prepositioning SRUs in the shop is already taking place in the WR-ALC, OO-ALC, and SM-ALC demonstrations. Its impact must be closely monitored.

3.11.2.2 Reliability and Maintainability (R&M)

The Air Force has a formal institutional program of R&M. It functions at all levels of the Air Force and has been very successful in the last several years. It is imperative that additional attention be given to improvements in R&M to further improve system responsiveness, shorten the pipeline, and reduce required inventories (by keeping those inventories out of the reparable/serviceable item pipeline as much as possible). Investments in trouble-shooting technology to reduce CND/BCS rates is a part of R&M.

It is important that stock levels are not set based on assumptions about R&M improvements but rather adjusted periodically as R&M improvements are made, verified, and measured. In FY96 25 percent of savings from R&M improvements will return to the MAJCOM or go to funding additional R&M improvements. These policies complement Lean Logistics since their goal is to produce components that require less time in the reparable/serviceable pipeline, thereby improving system support and resulting in reduced inventories.

---

[8] Tools such as DRIVE can be used to support induction decisions where constraints on repair capability exist and impact on aircraft availability is desired.

[9] *Lean Logistics: A More Responsive, Robust, and Affordable System*, I. K. Cohen, R. A. Pyles, R. A. Eden, DRR-630-AF, January 1994.

3.11.2.3 Responsive Transportation

There are a number of initiatives in the transportation area that impact Lean Logistics. Several of these initiatives are being used to support shop demonstrations. Active measurement of order and ship time improvements resulting from these initiatives should translate into inventory reductions.

A key premise in Lean Logistics is system responsiveness, which depends, of course, on the availability of responsive transportation. The criteria for responsive transportation will vary depending on operational users and levels of service required. These criteria include time definite delivery, accessibility to the selected transportation system, simple logistics system designs, item visibility, carrier integration with organic logistics systems, and different levels of service and pricing.

3.11.2.4 Readiness Spares Packages (RSP)

Improved pipeline processes and the potential reduction of inventories throughout the reparable/serviceable item system may lead to questions about the validity of current doctrine for sizing MRSPs. One may argue that kits might sustain units for less days since the pipeline, under Lean Logistics, operates (turns a part) much faster

The current kit can be delivered in the first few days of a mission when airlift is available (as other forces are marshaling). Its purpose is to sustain the unit while additional assets are being generated and moved to the theater. Kit size supports unit operations when a large portion of the airlift is typically devoted to other activities. Consequently, the size of the initial mobility footprint should be closely scrutinized. The purpose of the RSP is to provide enough spares to sustain initial operations until steady state resupply can be effected. Lean Logistics is intended to manage the risk associated with leaner RSP in a wartime environment by making the system more responsive to requirements. System responsiveness, therefore, may warrant a change in the size of kits. Depot responsiveness, distribution intertheater, and intratheater transportation must provide sufficient assurance that stocks will be on hand when needed.

Evaluation of required kit sizes using newly developed demand forecasting models is a current and required initiative within Lean Logistics. These models focus on flying hours and sorties as demand indicators to determine failure rates and support requirements. Meanwhile, the USAF needs to re-examine current policies/practices regarding non-optimized (NOP) assets. These are items that have no direct relation to flying hours, i.e. wheels and tires, or there is significant difficulty in determining an accurate wartime demand rate. Traditional theory suggested that some assets needed to be added to the range and depth of RSP in the event one was needed. This practice was largely influenced by the fact that units were to be autonomous for the first 30 days of a conflict. Actual experience indicates that there is not a single command in the USAF today that literally waits until D+31 for replenishment. Consequently, the USAF needs to re-look at what and how many assets are NOP'd into contingency RSPs. While there may be legitimate reasons for a small range of items, efforts must be made to minimize NOP items in RSPs.

The Air Force Supply Wartime Policy Work Group (AFSWPWG) is constantly scrutinizing RSP policy and procedures and has launched several initiatives designed to enhance both RSP requirements and assessments. AFMC, in conjunction with the operating commands has launched a PC based RSP requirements process designed to substantially decrease formal RSP face-to-face time and substantially decrease the extensive file maintenance time associated with computing and fielding an RSP. This program, and proposed enhancements should go a long way towards MAJCOMs playing the primary role in RSP development. Meanwhile, the AFSWPWG is developing an alternative means of passing on hand data to RSP assessments. At present, the Combat Supplies

Management System (CSMS) serves this purpose, but the group is examining alternatives to include terminating CSMS in favor of a more efficient and reliable process. In the interim, the AFSWPWG has decreased the volume of data passing through the system by more than 3 million records making the database smaller and more efficient. The AFSWPWG is actively involved in a host of Lean Logistics initiatives designed to streamline wartime supply support to include judicious use of the Air Force Contingency Supply Support Office (AFCSSO) at Langley AFB, VA. The AFCSSO provides effective supply support to deployed units thereby decreasing the number of personnel exposed to a hostile environment and expediting rearward support of critical assets.

Much of the focus in this version of the Master Plan is on evaluating pipeline reduction processes with emphasis on depot shop-level activities. The shop demonstrations currently play a key role in evaluating different approaches to organizational structuring. The results of the current initiatives provide valuable information to undertaking future conversion of shops, additional improvements to transportation and distribution processing, and improvements to base level activities in support of Lean Logistics.

3.11.2.5 Stock Leveling Process

There are two issues here: (1) how much to lean stocks as the pipeline is shortened, and (2) what processes to use to remove stocks from the system.[10] The first issue is under study currently by AFLMA who is reviewing available techniques for setting levels. The second issue focuses on whether to keep stocks at the base (in case they are needed in the future), at the depot (advancing depot responsiveness goals) or allowing the stocks to naturally attrit based on SBSS experiences. While a formal study of the potential costs and benefits of the three approaches may have value, the current AFMC shop demonstrations are employing several of these options. For example, the C-E and C-5 demonstrations are allowing some stocks to remain at the bases while other stocks are being moved into consolidated inventories. The oxygen and radar-navigation shop demonstrations are being supported by a CSI at the depot.

These and complementary issues are being addressed by various Air Force-level working groups. Their efforts focus on:

- CSI -- location, size, control
- Right-sizing the inventory -- methodology to use, when and how to do it, standards and factors to changed
- Ineligible/excess inventory -- how to implement control, impact on requirements process
- Stockage and retention policy
- RSPs -- proper size, location, supply CONOPs
- Bit and piece support -- streamlining processes, forecast requirements, contracting changes
- Parts obsolescence -- forecasting requirements, determining stock levels, and retention policy
- Management Review Codes -- streamlining the use, when and how to use them

[10] It is assumed that the formal mechanism for influencing buy requirements will be the DO41 system. Lower O&ST will result in lower inventory buy requirements for those items which are in a buy position and computed using actual O&ST. Many items fall in these categories and shorter cycle times do not result in lower buys.

3.11.2.6 Financial Management

There are a number of issues regarding the financial management of the repair process. Expedited contracting procedures, fenced support for bit and piece parts, and other budget issues require some review. Several initiatives are currently underway to improve processing in this area. DLA provisioning is also included in this issue.

There are other issues that require further consideration as they impact the shop demonstrations. They include: funding/budgeting constraints, manpower utilization, supply problems and their ability to influence response times, appropriate piece parts to support repair, etc. These issues affect supply, contracting, interface with DLA, etc.

3.12 Regional Maintenance Center Concept Evaluation

The Engine Regional Repair Center (ERCC) demonstration (ANG/ACC) concept attempts to lower cost per flying hour and reduce overall manning requirements. It is an alternative to three level maintenance just as two level maintenance. The advantages of the ERRC include:

- Consolidates JEIM
- Provides for mobility/surge
- Is more responsive and flexible
- Provides multiple sources of repair
- Maintains qualified personnel

The ANG offered Richmond as a test bed for the concept. Working groups have addressed issues that include maintenance, manpower, personnel, funding, facilities, transportation, supply, and others. To analyze the concept, the primary features of an engine repair facility will be measured, including:

- Output support to unit customers
- Pipeline times
- Identification of support for the repair process
- Identification of possible emerging problems
- Cost per unit output

Data will be submitted monthly and reviewed quarterly. Wherever possible, existing standards are being used. The specific metrics include: spare engine trends, forecast vs. actual removals, input/output volume, engine repair resources, TCTO status and issues, repair pipeline trends, current month pipeline flow, engine supply support, engine quality trends, and engine repair costs.

The ERRC represents the first combined effort of active and guard forces to establish a regional repair center for F110 (F16) engines. Pope AFB and Richmond guard unit engines (4-6 per month) will be repaired at Richmond by both active and guard personnel.

3.13 B-1 ORA

HQ ACC/LG established the B-1 Customer Support Center (CSC) at Langley AFB, VA, to improve support to the B-1 aircraft. It was essentially a testbed for many initiatives that will ultimately be used to support Lean Logistics concepts. The CSC is a dedicated cell of personnel to work all details of the B-1 weapon system. To maximize the support, the following tasks were accomplished:

- Analyzed the repair pipelines in conjunction with the base and depot

- Worked with the depot and contractors to analyze and improve computer systems and models
- Expedited reparable turn-in process. Reconciled aircraft status reporting and initiated cross-cannibalization of reparables
- Used the distribution and repair in a variable environment (DRIVE) computer model to determine levels at the base using their flying hour program
- Implemented Desktop DRIVE at two depots (Oklahoma City and Warner Robins) and provided user training
- The depot added NSNs to express tables and expedited the induction of critical assets into repair workcenters
- Redistributed serviceable base assets to level the playing field
- Validated over 600 NSNs (currently 81 assets are carcass/serviceable short), identified as organic avionics items and ICS supported electronics counter measures items (approximately 350 ICS NSNs)
- Established a quality supplier/customer partnership with key contractors to identify issues for improvement and resolved customer unique awaiting parts problems. HQ ACC Warner Robins and Oklahoma City worked together to improve the supplier's support by uploading drive repair and distribution listings to the contractor's computer to prioritize repairs and distribute assets. Also, the CSC assisted the Edwards AFB flight test facility in identifying support problems and improving parts availability for flight test aircraft.

3.14 Lean Logistics Master Plan/Road Map

Figure 3.1 provides a view of the Lean Logistics system implementation process. Beginning with a clear statement of goals (assure readiness and sustainability) and their translation into specific objectives (responsiveness, relevance, cost, simplicity), the system design is formulated. The current design focuses greatly on the reparable/serviceable pipeline but will be expanded to cover other complementary logistics issues in the future. That design leads to a set of tasks--both conceptual/analytical and implementation. The tasks correspond to the components of the Roadmap. The specific taskings in the Road Map are described in Annex D along with a designation of responsible organizations and a timeline for completion. Performance is monitored frequently through a discrete set of metrics that support "lessons learned" about both the concepts and the implementation process. A feedback loop from performance to the tasks drives changes to specific tasks. It is possible for performance indicators also to alter the Lean Logistics system design itself. The Lean Logistics implementation concept provides a comprehensive mechanism for implementation, monitoring, and change requirements -- all properly documented and sequenced over time.

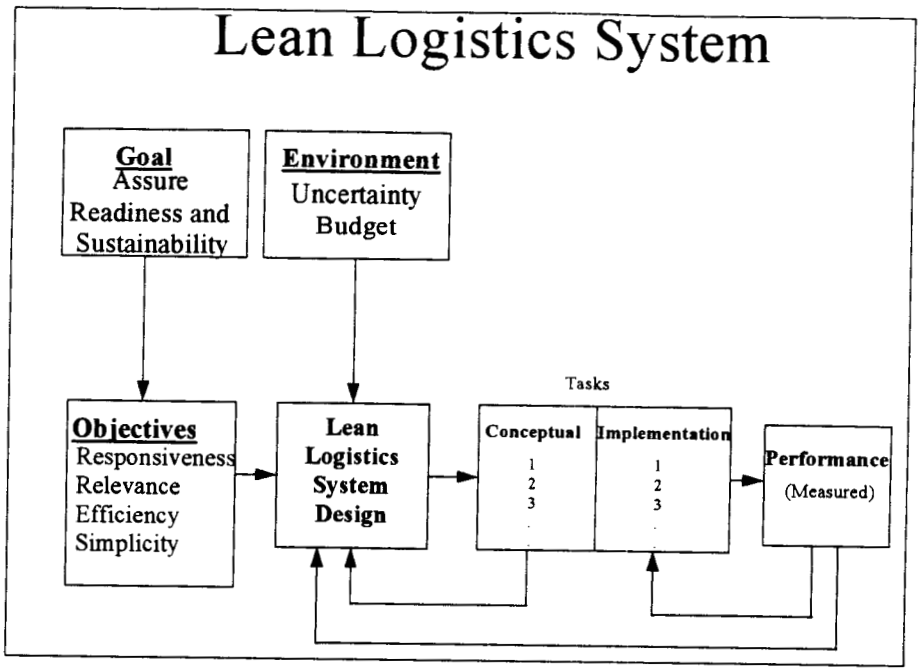

Figure 3.1 Lean Logistics Implementation Process

4.0 Related Initiatives and Issues

4.1 Lean Logistics Supply Initiatives

Air Force Supply is an integral part of the Lean Logistics initiative. Supply continues to improve and update its business processes, policies, management structures, and automated information systems to achieve a more efficient, effective, and leaner logistics system.

Lean Logistics concepts and strategy are embraced and supported by the various supply work groups (i.e. Air Force Weapon System Support Work Group, Air Force Stockage Policy Work Group, Supply Master Planning Work Group, Air Force Supply Wartime Policy Work Group) and is discussed from a policy perspective by the colonel level Air Force Supply Executive Board (AFSEB). The AFSEB and the supply work groups' structure and membership represents a bottom-up/top-down approach of addressing supply issues and initiatives, and has resulted in a number of near and long term Lean Logistics initiatives.

Near term initiatives include successes such as:

- RSP Demand Forecasting Changes
- Reductions in Spares Factors
- TAV for Consumables
- Supply Ordering and Sourcing System (SOSS) for Base Level System Modernization (BLSM)
- Five to Four Flights Objective Wing
- Communications-Electronics Test

Long term initiatives include:

- LASER - Logistics: A Support Environment Re-engineered
- Reductions in Days Used in Computations
- Regionalization of Processes
  - Mobility Bags
  - Equipment Management
  - Financial Management
- RSP Computation/Assessment Enhancements
- Divestiture of Non-Core Processes/Functions
- Common Processes for Retail and Wholesale Supply

These initiatives, and the many others being worked by the Air Force Supply community, will contribute to a more integrated and responsive logistics system. The evolving Supply Doctrine and Vision, along with continual process improvements, organizational and automated information systems enhancements are consistent with the DoD Logistics Strategic Plan and will help implement the Air Force Lean Logistics Master Plan.

4.2 Transportation's Contribution to Lean Logistics

As a critical component of the Lean Logistics network, transportation not only provides time and place utility for mission-critical assets, but also contributes other unique capabilities that add significant value to those commodities. Modern transportation systems give logistics personnel and warfighters vital information necessary to effectively use scarce resources during peacetime and wartime operations. The cost of a transportation service failure to deliver a critical item when and where required may be significant in terms of weapon system downtime, customer dissatisfaction, and unnecessary expenditures for stock and storage.

4.2.1 Key Concepts

Transportation primarily supports Lean Logistics based on the concepts addressed below:

- Door-to-door delivery. In contrast to traditional defense transportation systems that depend on node-intensive, intermodal means of moving commodities, lean, just-in-time delivery of critical assets requires door-to-door delivery to minimize handling and transfers between different operating and information systems. One key to successful logistics operations is simplifying the system through node reduction and process reengineering. Premium transportation services provide that seamless flow from the shipper directly to the end user. Developments such as Air Mobility Express and the Rapid Theater Distribution System depend heavily on premium commercial services, sometimes augmented by dedicated, organic military airlift to streamline routing, expedite handling, and increase visibility, accountability, and reliability.
- Time definite delivery. Modern express transportation services achieve lean logistics objectives by reducing variability in pipeline in-transit times. In addition to providing users with reliable delivery of mission-critical parts, time definite delivery permits reduced investment in both cycle and buffer stock inventories.
- Reduced order and ship times. Transportation systems used to support lean logistics also result in reduced order and ship times for critical commodities. Not only do express modes provide time saving, streamlined handling and routing, but modern transportation information systems generate an uninterrupted flow of data to ensure seamless interfaces with shippers and users. These same information systems add value by providing in-transit visibility and permitting customs clearance and workload planning to begin in advance of cargo arrival.
- Reduced mobility footprint. Historically, logistics personnel have compensated for pipeline variability with larger readiness spares packages. Lean logistics time-definite transportation modes enable deploying units to travel lighter by creating a reliable resupply pipeline. This reduced mobility "footprint" translates into greater lift availability and increased wartime flexibility.
- Data in support of logistics pipeline analysis and command and control. In-use and developing transportation information systems provide logistics personnel with key data for a variety of uses. Uses for these data include shipment tracking, problem solving (e.g., shipment diversions, elimination of duplicate requisitions), anticipatory problem solving (i.e. resolving logistics problems prior to user awareness of problems) and development of logistics and transportation policy. In the past, policy was developed on what logistics personnel believed to be true because information was not structured to support decisionmaking. Development of Total Asset Visibility (e.g. ATAC-AF) and In-Transit Visibility (e.g. GTN and

CMOS) capabilities provide a foundation from which to approach problem solving and policy development. For instance, in-transit time data for transportation segments can be analyzed to help determine the volume of spares needed to support a given operation. Similarly, commanders can plan operations based on time-definite availability of mission-critical assets.

- Leveraging Increased Transportation Costs with Inventory Reductions. From a total cost perspective, the relative costs of transportation and information are dramatically less than the costs associated with initial inventory purchasing, and inventory carrying costs. Investment in express delivery services will recoup significant cost savings through the resulting reduction in inventories stemming from reduced variances in order and ship times and more frequent order intervals.

4.2.2 Transportation Enabling Actions

To achieve the Lean Logistics objectives, transportation facilitates the following actions.

- Increased system responsiveness. By providing dependable, high-velocity, time-definite delivery of mission-critical items, transportation ensures that the logistics system responds quickly to user needs.
- Reduced inventory investment. Lean logistics just-in-time delivery concepts increase pipeline throughput by using express transportation modes and streamlined processing. By accelerating reparable item turnover and initial delivery, rapid transportation is substituted for inventory, and becomes, in effect, an inventory "multiplier." Reduction of transit times and their variability results in proportionate reductions in days of supply and buffer stock.
- Node reduction. Service breakthroughs in order and ship times depend on our ability to eliminate logistics nodes. Entry and exit of operating and information systems cause significant slowdowns in movement and processing speed, opportunities for mishandling and damage, and increased complexity in asset control and in-transit visibility.
- Service reliability. Under lean logistics, transportation depends heavily on premium services or dedicated route organic aircraft. These modes increase sustainment reliability by reducing transportation nodes, handling, and variability, and increasing visibility, accountability, and system robustness. This reliability gives planners the confidence to deploy lighter, more flexible units, and reduce inventories of critical spares.
- Logistics pipeline integration. Recent transportation initiatives and information systems have blurred the lines between the various segments of the logistics pipeline. Repair and return packaging (R2P), door-to-door delivery, tailgate processing, and other initiatives have eliminated or streamlined many of the functional handoffs that occur as items move through the pipeline. Automated transportation systems with open architectures are helping to bridge logistics functions, and even disparate systems from the Army, DLA, and other agencies. The result can be a rapid, seamless flow of both assets and information from shipper to user.
- Centralized/regionalized repair. By providing rapid, reliable delivery of reparable items, transportation enables repair facilities to be centralized or regionalized. Such facilities permit greater economies of scale and eliminate the need for manpower and mobility-intensive base-level repair facilities.

- Differentiated levels of service and pricing. Pursuit of a Lean Logistics concept requires transportation purchases on a value of service basis. Transportation services must be tailored to meet the particular needs of the user. Commercial providers in particular are able to provide a range of service levels that provide increased levels of service at higher rates. Users should have the ability to select more rapid time-definite deliveries in exchange for higher rates. This pricing approach enables the customer to recognize the cost impact associated with service-level decisions. Differentiated pricing should be applied to organically provided lift as well. This approach is consistent with the "user in control" concept and it requires the user to know and manage logistics cost.

An example of differentiated levels of service and pricing is found in the express carrier industry where customers have the option to move materiel overnight or in two or three days. Naturally, there are price differences associated with those varying levels of service. The customer must weigh the cost-service benefits associated with overnight delivery compared with two or three day service.

4.2.3 Required Transportation Investment

Although the term "Lean" Logistics implies a diminished investment in logistics elements, transportation requires selected strategic investments to realize its potential to maximize pipeline output. Among these investments are:

- Capital investment in logistics information systems to tradeoff reduced transportation and other logistics functional costs. Transportation information systems give planners and commanders a vital capability to make mission and cost-effective decisions. Instead of reordering items thought to be lost in the pipeline, they will be able to locate and track critical assets, and plan operations and workload accordingly. The investment in these information systems yields more than just cost savings -- it provides mission readiness through improved data for command and control.
- Increased O&M dollars in transportation to tradeoff reduced inventory contracting costs. As mentioned, moving reparable items through the repair cycle faster has the same effect as increasing the number of available spares. Likewise, buying premium transportation results in savings over initial spares requisitions, as well as storage and handling costs for those items.
- Same structure/processes in peace and war. Today's lean fiscal and manning environment demands that systems and processes be indistinguishable, or at least similar, in peacetime and wartime. Information systems designed to function in both environments reduce training requirements and the number of people necessary to execute key processes. Again, investments in both time and money are required to ensure that such systems and processes are integrated across all of the logistics functions, and across all of the using services. Operationally, processes employed in peacetime operations should have wartime complements that require minor changes in methods of operation. For example, Air Mobility Express serves as a wartime complement to the Door-to-Door Delivery Concept.

The Cargo Movement Operations System (CMOS) serves as another example of a system operating in peace and war. During peacetime and sustainment operations, CMOS supports traffic management operations. In deployment operations, CMOS serves as a major component of the

Integrated Deployment System. Using the same screens and shipment procedures CMOS provides automated support of unit movement operations.

4.2.4 Role of Express Delivery Reinvention Laboratory in Support of Lean Logistics

Lean Logistics principles and practices have been adapted from lean production and just-in-time distribution practices pioneered by industry. The Express Delivery Reinvention Laboratory capitalizes on these practices while supporting logistics operations through rapid development of prototype applications to improve DoD logistics processes. The primary purpose of the lab is to support Lean Logistics through contributions made to Door-to-Door Distribution (D3), Air Mobility Express (AMX) and the Rapid Theater Distribution System (RDS) concepts.

In partnership with DLA and USTRANSCOM, the Express Delivery Reinvention Laboratory has been certified by the Secretary of the Air Force to obtain waiver authority to Federal and DoD regulations to test new business practices in a field environment. Working closely with the express carrier segment of the transportation industry, the reinvention laboratory develops and implements applications for Return and Repair Packaging (R2P), Mail-like Matter Movement (M3), the Standard Transportation Industry Information Processor (I2P), and Customs Clearance Electronic Data Interchange (EDI).

Primary among the lab's goals is to foster continuous process improvement. Lab personnel will benchmark current and emerging, state-of-the-art business practices and focus on those practices and technologies that promise to achieve the greatest improvements in responsiveness.

4.3 Lean Logistics Cost Issues

The efficient implementation of Lean Logistics requires the development of a framework to assess the various initiatives underway at any time, comparing costs and benefits as indicators of how to improve the implementation process. A systematic integrated understanding of the various efforts helps to identify those activities that are complementary and those that are redundant. One goal of this Master Plan is to gather information about activities, process that information, and provide a framework for implementing Lean Logistics in an efficient and effective manner. A cost structure and a device for estimating potential benefits is central to that process.

The cost structure for evaluating Lean Logistics includes the following:

Table 4.1 Lean Logistics Cost Structure

						COST	ELEMENT	STRUCTURE		
							INDENT 1			
		FY95			FY96			FY97		
		BASE	DEPOT	HQ	BASE	DEPOT	HQ	BASE	DEPOT	HQ
INVENTORY										
	LRU									
	SRU									
	PIECE PARTS									
PERSONNEL										
EQUIPMENT										
FACILITIES										
INFORMATION SYSTEMS										
TRANSPORTATION										
	R2P									
	EXPRESS									
TRAINING										
OTHER										
	ATAC									

Some of these costs are nonrecurring while others are recurring. That distinction will be developed further. Each of these cost elements can be estimated over a multi-year time horizon. Lean Logistics does not dictate that all cost elements must be reduced for success. Indeed, tradeoffs occur and the theory of constraints dictates that one focus on reducing the major cost elements first and then focus on marginal improvements. Furthermore, Lean Logistics implementation is a process, not a one-time initiative. One of its tenets is continuous improvement.

Many of the cost elements should change over time. For example, it is widely recognized that transportation costs will rise as parts are shipped using express or premium transportation. It is also widely recognized that transportation itself is a relatively small portion of the cost of the pipeline. The cost avoidance that results from system-wide process improvements and resulting inventory reduction due to improved pipeline times will more than compensate for increased transportation costs. Of course, this result only affects items still in the buy program. If the item is in long supply, potential future cost avoidance may occur. These results also depend upon the unit cost of the item since the cost avoidance is a one-time savings while the increased transportation costs occur annually. The cost analysis focuses on determining how costs can be contained to provide an efficient operation while absolutely meeting mission effectiveness requirements.

Another cost issue concerns more timely (within two days) evacuation of reparables. This action will increase DLR and end-item costs from historical levels (when they were held at the base to be fixed).

The primary benefit of Lean Logistics is an increase in capability due to a responsive system. Therefore, the benefits must be measured primarily in output-oriented metrics such as mission capability. Work is underway to develop a comprehensive evaluation structure to measure benefits due to increases in mission capability as well as pipeline time reductions and cost and inventory reductions. This evaluation structure would also address the full spectrum of cost cond\siderations.

Benefits also accrue due to Lean Logistics in pipeline time reductions. Factors that affect the pipeline include:

- Requisition time
- Issue time
- Processing time
- Transportation time
- Repair time

All of the time measures compose the pipeline time. Each of these categories of time is made up of other time measures as well as other measures of pipeline effectiveness. Pipeline time, in turn, directly contributes to required inventory levels, a second benefit. Lean Logistics will reduce inventories due to improvements in pipeline operations. These benefits are measured both in days in the pipeline and future cost avoidance of required inventory levels.

4.4 Lean Logistics Information System Issues

The Lean Logistics system of the future will require an information system (it may be more of a "system of systems" than a totally new system) that supports the goals of the program. This information system will be unlike most traditional information systems in that it will be more streamlined, require less data, and can be built relatively quickly by leveraging existing systems, tools and data. The Lean Logistics system will have a decision support component that will be more like a command and control subsystem operating off of an integrated data base consisting largely of existing data obtained from other systems - A prototype of this system should be started soon. This effort must review current systems' functionality, connectivity, cost, etc. as a starting point. It must consider existing and developing systems' functionality, including CAMS, REMIS, TICARRS, BLSM, DMMIS, etc.

A major part of this Lean Logistics Command and Control (L2C2) module will be fed by ATAC-AF for asset visibility. This system is described below.

4.4.1 ATAC-AF

The Advanced Traceability and Control for Air Force (ATAC-AF) is a system interrogation tool that uses current data and information systems to provide visibility of assets moving through the reparable/serviceable pipeline. This visibility gives managers the capability to manage the pipeline.

4.4.1.1 ATAC-AF Schedule

- Phase 1. Phase 1 came on line 1 Oct 93 and had to be modified because of numerous problems. It came back on line 30 Apr 94.
- Phase 2. Phase 2 is to be implemented incrementally from 1 Oct 94 through 31 May 95. When complete, it will provide pipeline visibility of two-level and three-level retrograde and serviceable assets moving through all pipeline segments. It will also track assets moving from/to a contractor and NRTS assets moving between depots. Additionally, it will provide visibility of consumables moving through the pipeline.
- Phase 3. Phase 3 comes on line 1 Oct 95 and will provide visibility of two-level engines and bad actors moving through the pipeline.

4.4.1.2 Information Provided

ATAC-AF will provide standard reports reflecting the amount of time, in days, that it takes assets to move through each segment of the pipeline. On retrograde items, the time is measured from

the time the asset is pulled from the end item until it is turned serviceable by the depot. On serviceable items, the time is measured from the time the base submits a requisition until the asset is received by the base. ATAC-AF also provides a Systems Query Language (SQL) facility that enables the user to develop individualized data queries into the data base.

4.4.1.3 Interface Requirements

ATAC-AF will interface the following information systems. This list will change as new systems come on line.

FUNCTION	INFORMATION SYSTEM
Maintenance	GO-81, CAMS, TICARRS, REMIS (DEPOT Systems) EPS, DMMIS
Transportation	CMOS, GTN, ETADS, EDI
Supply	DO35 A,K,L,R, SCS, SBSS
Other	API, DSS, SALTS

4.4.1.4 Pipeline Measurement

ATAC-AF will measure both the retrograde and serviceable pipelines.

ATAC will provide the following types of information:

- Phase 1 - TCN, NSN, Condition Code, Day, Maintenance Document Code, And Time
- Phase 2 - JCN, NSN/PN, Time, T/I Document, Condition Code, SN, and Day

The system measures:

• Flightline/installation	Remove from equipment - repair initiation - out of repair - receipt at supply - receipt at TMO - release to carrier
• Carrier	
• DLA	Process time
• Depot	Induction to repair - repair - serviceable turn-in

ATAC-AF, when fully developed and implemented, provides total pipeline visibility of all activities in the reparable/serviceable item pipeline. It allows managers at all levels (with proper access) to manage the pipeline and all attendant activities. ATAC-AF forms the basis of a logistics command and control system for the repair process. It provides real-time management of the system allowing changes to repair priorities, shipment priorities, etc.

There are a number of issues that must be dealt with as the development of ATAC-AF continues. They do not impact current efforts but add to functionality as Lean Logistics initiatives progress. They include the following:

- ATAC-AF must incorporate proposed changes to information systems that will result from the implementation of Lean Logistics

- ATAC-AF must consider the current and likely future accuracy and completeness of the data it receives, much from systems that historically have been known to have problems in these areas
- ATAC-AF should be used as a mechanism to validate data from these other systems and formulate changes to improve overall data accuracy and completeness

4.4.2 Pipeline Data Measurement Tools

There are several measurement tool now in use that will support the shop demonstrations at the depots. Several are briefly described below.

4.4.2.1 AFLMA Lean Logistics Visibility Tool

The AFLMA Visibility tool is being used as an interim capability pipeline tracking tool for the depot during the AFMC shop demonstrations until ATAC-AF comes on line and is adequately tested for performance. This tool, in addition to filling needs now for the demonstrations, will provide insights into the ultimate tools required in this area of visibility.

This tool was developed by AFLMA specifically to support Lean Logistics, first for WR-ALC. It is a dBase IV program that extracts data from the Defense Automated Addressing System (DAAS) and D035K. It selects transactions data on customer demands, current serviceable balances in the CSI, in-transit reparable carcasses, and the number of assets in repair.

4.4.2.2 Shop Measurement Tools

There are several shop-level tracking systems that are in use across the shops and depots that can aid the implementation of Lean Logistics by tracking the depot shop processes (times, materials, etc.). These include: Smart Shop, operating at WR-ALC, Avionics Two-Level Integration System (ATLIS), Inventory Tracking System (ITS), and B-1 Enable at OC-ALC, Material Tracking System (MTS) at OO-ALC, as well as some shop-unique systems throughout the depots. A review of those tools is ongoing to determine their benefits and limitations with the possibility of having AFMC recommend a standard tool for use by all shops/depots. AFMC/LG-LL is developing a standard tracking system to monitor shop repair.

4.4.3 Other Information System Issues

There are a number of specific information system issues that must be addressed during the implementation of Lean Logistics. One specific issue concerns the development of the new Base Level System Modernization (BLSM). BLSM will acquire and implement portable software and communication protocols to modernize standard base level communications-computer systems. BLSM will utilize IDEF modeling, POSIX, Ada programming language, X-Windows as the graphical user interface, SQL/RDBMS, object oriented software engineering techniques, and Integrated Computer Aided Software Engineering (I-CASE) tools to re-engineer, redesign, and improve 36 standard base-level automated data systems serving 12 functional areas, including: operations, logistics (plans, maintenance, supply, transportation), comptroller, personnel, manpower, medical, C-E, services, and contracting.

A careful review of the impacts of these supply, maintenance, and transportation information systems will be undertaken during the further development of the Master Plan and in support of the AFMC shop demonstrations. Recommendations for changes to specific systems will follow. Section

6 of this Master Plan addresses implementation issues and includes a detailed discussion of the role of information systems in the Lean Logistics environment.

A portion of the Lean Logistics information system must be a part of or interfaced to the USAF Command and Control system. The visibility of critical items and mechanisms for their allocation/re-allocation is a CINC requirement imposed upon Air Force components.

4.5 Lean Logistics Design Issues

There are a number of issues that address design features of a Lean Logistics concept that require some discussion, evaluation, and resolution. These issues do not need to be resolved before any AFMC shop or weapon system demonstrations are undertaken or completed but they can provide valuable information as the Air Force accelerates its conversion to the principles of a Lean Logistics system. Most design issues can be evaluated and have applicability by class of item or component, that is, aspects of design may affect different items/components differently. It is not clear that adopting a "one size fits all" theme for the implementation of Lean Logistics is optimal. Variations by commodity class, where scale and scope do not produce excessive cost penalties, may be the appropriate response for the Lean Logistics system. Several of these issues are described below. Table 4.2 shows the baseline Lean Logistics design along with a number of alternatives. The alternatives do not require application as a single group, that is, some from Alternative 1 could be used with some from Alternative 2.

Table 4.2

Lean Logistics Design

Function	Baseline	Alternative 1	Alternative 2
Serviceable Inventory	CSI	None	
Raw Materials Inventory	LRU, SRU, Bit/Piece	Responsive	Better Forecast
Inventory Location			
Serviceables	SOR	Base	Transportation Hub
Reparables	SOR	Base	Transportation Hub
Transportation			
Critical Items-Short Supply	Express	Express	
Critical Items-Long Supply	Express	Routine	
Distribution	Expedite Receiving	Shop Direct	Central Receiving
Shop Induction	CSI Holes	Direct	Batch
Base Evacuation Time	Fast (2 Days in Many Cases)	60 Day* (Current)	10-30 Days

* Credit return time

While implementation proceeds, several of the alternative can be evaluated though limited studies or controlled experiments. A link to operational modeling and simulation techniques might provide an appropriate environment to assess their impacts from the user perspective. The Roadmap presented in Annex D includes a task to address this issue.

4.5.1 Location of Consolidated Stocks

There are several options for locating stocks that are consolidated above the levels held at the base or installation. One option would place the stocks at the source of repair (depot or contractor facility). Existing facilities and information systems could be used to monitor levels. Another option

is to centralize the stocks at a transportation hub where response times could be reduced, information systems simplified, and accountability improved. Indeed, this option could be extended to contract the entire operation to a commercial entity for servicing, warehousing, control, and distribution, with commercial tracking systems. Another option would use SBSS DIFM processing at a government facility.

Analyzing these options, that is, identifying their costs and benefits would necessarily rely upon empirical analysis as well as comparative descriptions and logical argument. The exercise is probably best served by a paper evaluation, not a real-life exercise of the options (which would no doubt be very expensive and difficult to conduct).

Any evaluation of these options should include DLA and it's responsibility for bit and piece support. Coordination between the Air Force and DLA has been initiated and is proceeding in a satisfactory manner at this time.

4.5.2 Repair to Demand

The concept of repair to demand is employed in Lean Logistics to speed the pipeline of repair and address the problem of the uncertainty of failures and repair requirements by repairing based on valid requirements as determined by CSI management. One issue with this concept is the required amount of capacity in the shop necessary to be able to repair any item that fails. An option is to have additional capacity available for contingencies. The issue here is how much capacity is appropriate and what productive employment (cross-training, etc.) can be gained during slack times. Another is to size capacity requirements lower and provide for additional sources of repair. Duplicate equipment, facilities, etc. becomes an important cost issue here. In any event, the potential for backlogs exists. Some determination of how much backlog is acceptable needs attention. Obviously, variations across components will occur. Studies are ongoing on these issues and decisions might be made after BRAC95.

Shop scheduling is a variant of this problem and a mechanism or set of decision rules about how to induct where capacity problems exist needs to be defined. If the system is sufficiently responsive, a simple FIFO logic may be acceptable. The demonstrations will provide additional information to draw conclusions about these processes.

4.5.3 Control of Stock Distribution

The concept of a Command Logistics Control Center (CLCC) in conjunction with a Command Supply Center (CSC) has been advocated by some as an effective mechanism to distribute stocks to maximize measures of mission capability. The CLCC would serve as the principal distribution/repair policy making body, providing guidance to the CSC for implementation of the distribution policy. It would negotiate with AFMC about repair performance (quality, responsiveness, etc.) and with other Commands and within its own Command about distribution when assets are constrained. With no asset constraints, the CSI would distribute automatically. Indeed, the recent C-5 demonstration with a CSC at HQ/AMC evaluated some of these concepts. It is not clear, however, whether the Dover evaluation employed all the principles under which a CSC would typically operate. Advocates of the CSC concept claim that it should provide the key functions of warehousing, issue, and receipt and the necessary tracking of all activities. In conjunction with holding the stocks at a hub, the hub and spoke concept increases scale and simplifies tracking. It can also increase responsiveness to user's urgent needs by shortening the time between requisition and delivery to the unit.

Since all movements either go through or are monitored by the CSC, worldwide accountability improves; data collection is also simplified. The concept can be operated at a government CSC using SBSS DIFM processing[11] or be contracted out to commercial industry. Some further study of this concept should be undertaken to compare the costs and benefits of the CSC to alternatives (at least what is being done today in the shop demonstrations).

4.6 Weapon System Cost Reduction (WSCR) Program

The Weapon System Cost Reduction (WSCR) program is a set of initiatives, bound by contract, to reduce the cost per flying hour of AF weapon systems. WSCR is a four step process, including:

- Establish funding baseline
- Develop cost reduction contract
- Integrate budget inputs
- Feedback through WSPAR

There are a series of acceleration initiatives which include:

- Depot maintenance
- Extend cycles
- Adopt commercial inspection concepts
- Contract PDMs/overhaul
- Consummables
- Reduce inventory
- Regionalize repair
- Gold Flag
- Software/sustaining engineering
- Extend OFP cycles
- Develop second sources for contracts
- Contract for support as needed

WSCR advocates managing costs like any other readiness indicator (collect data and conduct comparative analysis). It requires a partnership with the FM community. Its success depends upon holding leaders at all levels accountable (with structured performance monitoring) and it encourages exploration of alternatives (with rewards for innovation). Portions of savings can be reinvested for power projection and mobility purposes.

WSCR reduces O&S costs through system teams, takes the savings up front, adjusts appropriate requirements, provides for continuous improvements -- and most importantly, focus on initiatives not the baseline.

The status of WSCR at this time is:

- AFI in final coordination
- Baselines are being refined
- Contracts for cost reduction are being developed
- POM coordination in place
- Identification of reinvestment initiatives occurring
- Evaluation of other high cost systems under study

[11] as opposed to non-DIFM processing such as warranties, consummables, etc.

5.0 Lean Logistics Evaluation

5.1 Methodology to Undertake Appropriate Implementation

Efficient implementation of Lean Logistics concepts requires the application of an evaluation technique that provides the Air Force with a clear view of its benefits and limitations. Lean Logistics can be viewed through the application of Theory of Constraints principles, which basically means that one searches for that part of the (logistics) process that constrains faster, more accurate, more efficient operation. Once identified, resources and actions are applied to reduce/eliminate the constraint. Performance is measured to determine what was achieved for that particular action. Then the next constraint in the process is addressed. The process continues until operational or fiscal goals are achieved (and then usually new goals are formulated). Within the Air Force, the initial focus is on the reparable/serviceable item pipeline because it represents the greatest opportunity to reduce costs.

5.2 Process Chart of the Pipeline for Reparable Items

Benchmarking is important to the process of evaluating Lean Logistics concepts so that progress can be accurately measured and initiatives with little payback discarded. That benchmarking requires a view of how the system operates today and how it will change in the future. Tools used to describe this process must be able to incorporate key factors that affect the operation of the system as well as costs. Flow charts and especially Integrated Definition (IDEF) techniques are ideal for this application because they clearly show the system "as is" and "to be", and allow the identification of the key constraints in the improvement process, as well as integrate and measure the impact of specific actions. Prior to implementing formal process tools to reengineer the entire reparable/serviceable pipeline, it is useful to visualize the system today and the proposed Lean Logistics system with flow charts. Figure 5.1 shows the reparable/serviceable item pipeline as is.

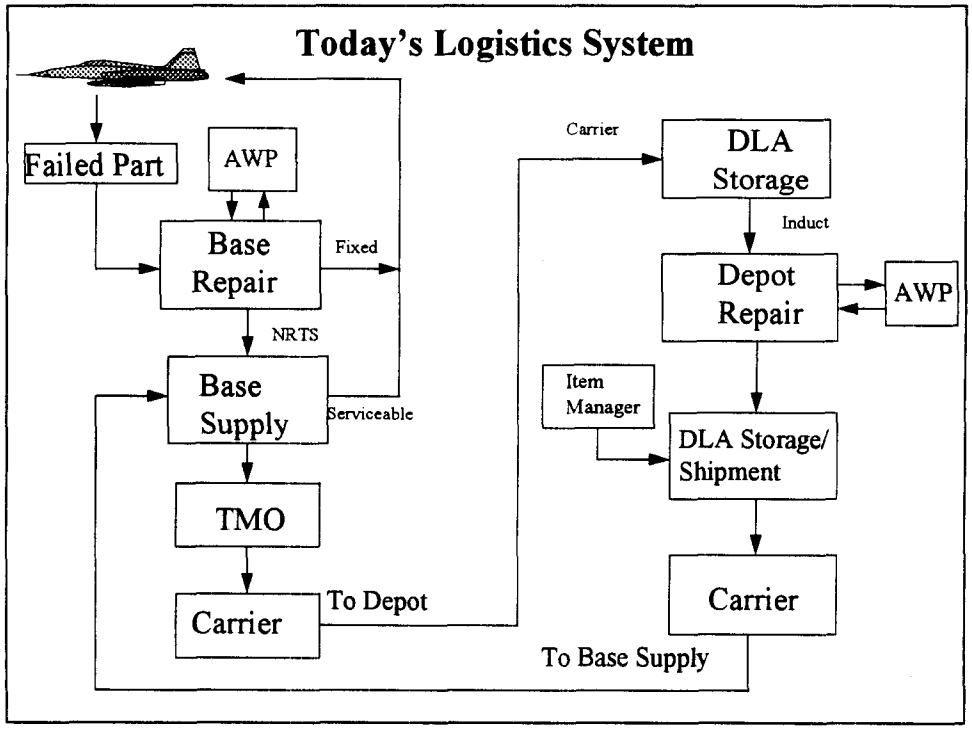

Figure 5. 1 Today's Logistics System

The aircraft returns from a flight with a failed part. The part is removed from the aircraft (if it cannot be repaired on the aircraft) and sent to base repair, where it is either repaired and sent back to base supply, put into AWP (awaiting parts) or NRTSed (Not Repairable This Station). With a requisition, a serviceable is issued (if the part is available in supply) to the flightline to repair the aircraft. Base supply sends the NRTSed reparable to the transportation management office (TMO) for processing to ship the part to the depot for repair. DLA receives the part at the depot from the transport carrier and either stores the reparable or sends it to the repair shop for induction. The repair shop at depot fixes the part or must set it aside while awaiting parts. Once fixed, the part is sent back by DLA for storage of the serviceable asset or to the carrier for shipment back to base supply.

A Lean Logistics system shortens the pipeline by moving all parts by express transportation, reducing the time necessary to decide if parts can be fixed at the base or they must go to depot, improving processing times to move parts through the system, consolidating inventories at central points for speedy distribution to users, and improving communications throughout the process for complementary and simultaneous actions. Figure 5.2 shows the Lean Logistics system.

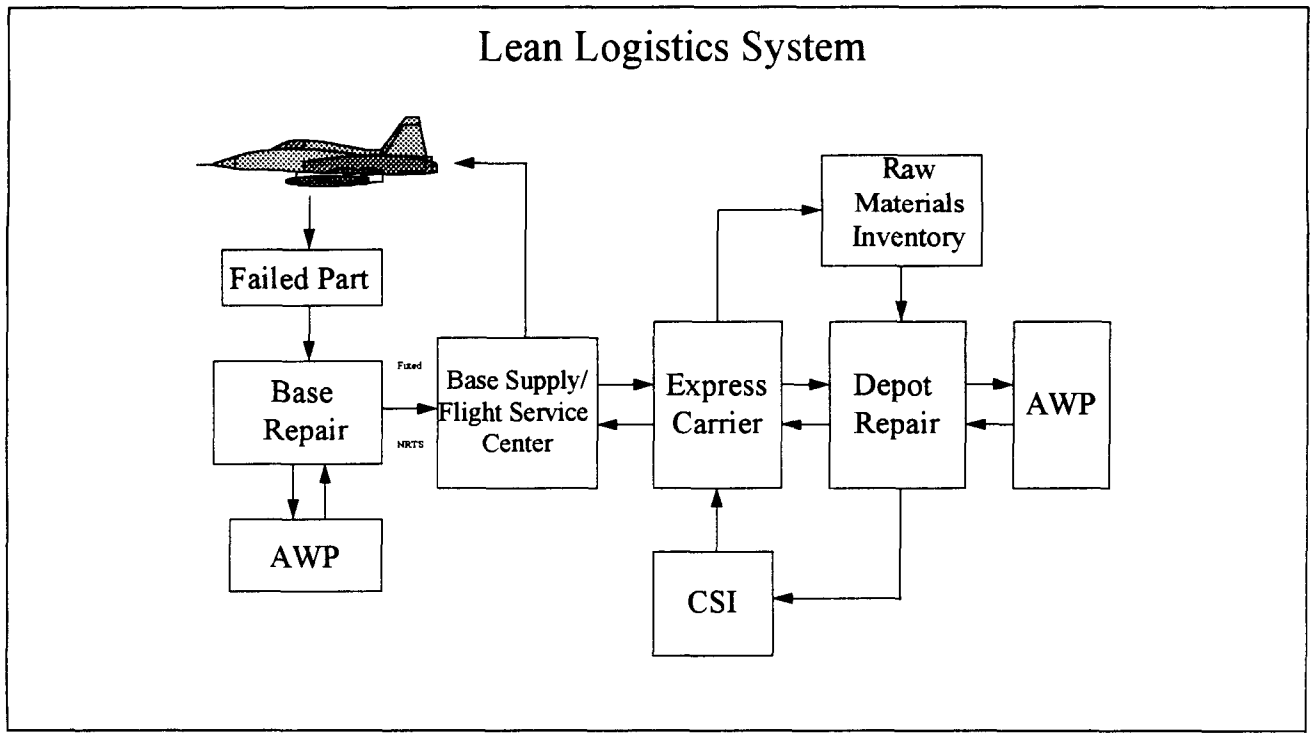

Figure 5.2 Lean Logistics System

Under a Lean Logistics concept, the failed part is sent to base repair which has a definite time constraint to fix or NRTS the part. If the part is NRTSed, it speeds through base supply[12] to a carrier to be moved express to a depot. Once the part is NRTSed, a serviceable is released from the consolidated serviceable inventory (CSI) and express shipped to base supply or the flightline. If there is materials inventory at the depot, the base NRTS action triggers an immediate release of a reparable into depot shop repair. Once the repair is completed, the serviceable is sent to the CSI, which is located at the source of repair (the depot) for storage until required by the user.

[12] With R2P, it is possible that the NRTS action releases a serviceable from the CSI in a container that will carry the reparable directly from base repair to depot repair. All return labels are included in the container so that base repair provides minimal processing of the shipment. Implications for the workload of the TMO are obvious. On the other hand, some items (classified, heavy, no containers) must go through the TMO.

5.3 Activity Based Costing Application

5.4 Incorporate Impacts of Information Systems, Regulations and Acquisition Procedures

Information systems, regulations, and acquisition procedures are three of the most important factors that affect and are affected by Lean Logistics initiatives. Section 6.0 addresses how IDEF technology identifies where these factors impact the logistics system and helps to identify and document how these factors must be changed to support Lean Logistics. IDEF technology not only provides a structured format to trace these factors but provides the required audit trail for evaluation purposes, that is, to be able to attach costs and benefits to specific applications of these factors in the logistic system.

5.5 Consistent with DoD Regulations for Process Analysis

5.6 Data Analysis and Evaluation Procedures

A set of data analysis and evaluation procedures have been developed to support the existing and planned ALC shop/weapon system demonstrations. The evaluation procedures include more than strict data analysis based on the metrics collected during the demonstrations. First a review of the shop repair process improvements is made. Then metrics data are collected and a formal data analysis is performed. Finally, a structured set of lessons learned are developed and used, systematically, for future shop/weapon system conversions.

The objectives of the data analysis portion include:

- Identify problems
- Track pre-and post-demonstration metrics (where possible)
- Support/direct changes to repair and pipeline processes
- Provide information to ALCs, MAJCOMs , others on performance, and
- Support policy decisions

Metrics data collection include base level which is supported by CAMS and SBSS data, depot level which is supported by several shop tracking systems, such as Smart Shop, ATLIS, B-1 Enable, MTS, ITS, etc., and pipeline metrics which are currently provided through DAAS transaction, later to be replaced by ATAC-AF. An effort to evaluate the depot level measurement tools and standardize these systems across shops and depots is underway.

A framework for the data processing is presented in Figure 5.3. Data from each of the three major parts of the repair process comes into a central data base after a filtering process validates and corrects for definitional differences and verifies values. These data are then imported into a relational data base management system. A standard set of analyses is undertaken and the results presented in a set of standard tables and charts. Some of these results may be ported throughout the Air Force using the Sustainability Executive Management Review (SEMR) tool. Ad hoc query capability is also provided so that users can always interrogate the integrated data base at will. Multiple similar interrogations may trigger the generation of subsequent standard reports.

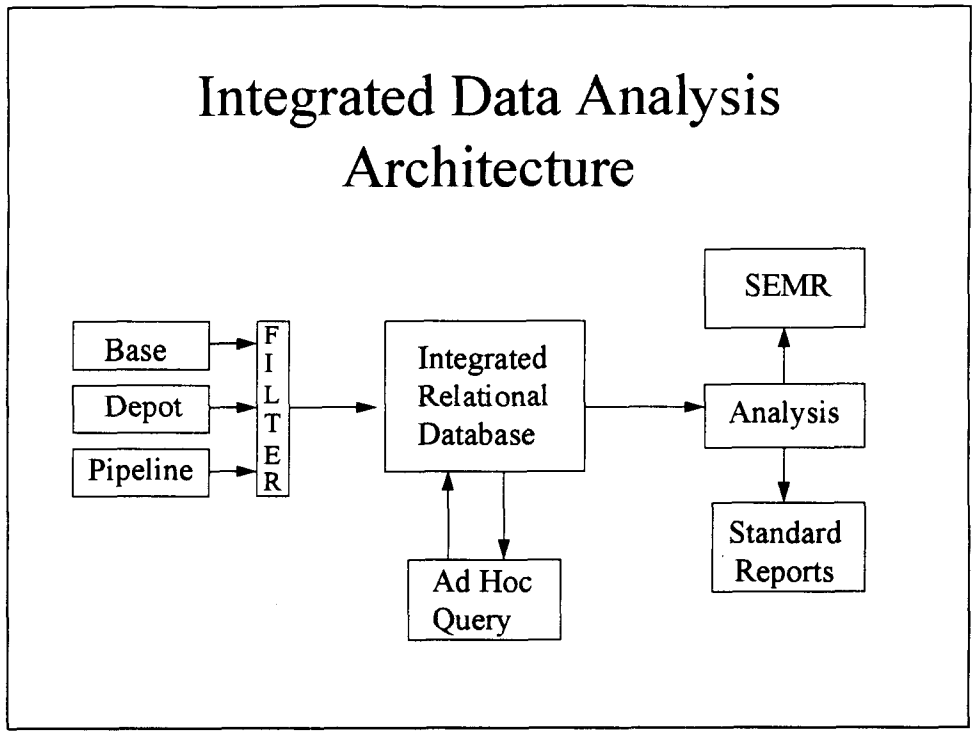

Figure 5.3 Integrated Data Analysis Architecture

The data analysis itself focuses on averages and variances in values and their trends over time. A set of decision rules can be developed to serve as an early warning system trigger that actions need to be taken to mitigate potentially disruptive results. The combination of two, three or more metrics displayed together may be used to judge the health of the process for a particular component.

The data base management system will include the data for all NSNs for the demonstrations. Item coverage will track closely the mission critical items and provide some sampling capability for the noncritical items. System inquiries can, at any time, extract data for any NSN.

There are several issues that will be addressed as the prototype data analysis system is developed, including:

- Precisely which metrics to include
- Which combinations of metrics to present
- What information is desired from the metrics
- How is the information to be presented
- Who is to receive the information

6.0 Implementation

6.1 Technical Implementation-Metrics

Defining the proper metrics that support measurement of the implementation process is a key issue in Lean Logistics. It is imperative that all those involved in the implementation of Lean Logistics focus on a standard set of terms, definitions, and metrics for measurement purposes. A standard set of terms and definitions that support the AFMC shop demonstrations is provided in Annex B.

Table 6.1 provides a standard set of metrics which could be used for measurement of the pipeline processes. Definitions for the metrics are provided in Annex E.

Table 6.1 Metrics for Measurement of the Pipeline Processes

Metric	Type of Measure	Metric	Type of Measure
AWP incidents (base and depot)	NUMBER	NMCS Hours (MICAP)	HOUR
AWP time (base and depot)	TIME	NMCS Incidents	NUMBER
Base issue effectiveness	RATE	NRTS actions	NUMBER
Base reparable evacuation time	TIME	Number of cause code H/K NMCS	NUMBER
Base shipment processing time	TIME	Received from Repair Shop to Stow	TIME
CSF fill rate	RATE	RSP fill rate	RATE
CSI issue effectiveness	RATE	RSP issue	NUMBER
DLA handling costs	COST	Shop Repair Time	TIME
Ineligible withdrawals	NUMBER	Test item cannibalization rate	RATE
Inventory levels	NUMBER	Transportation costs	COST
MDR and PQDR incidents	NUMBER	Transaction Communications Time	Time
Receipt of MRO to Shipment	TIME	Request-to-fill time	TIME
Reparable transit time	TIME	Receipt of MRO to Shipment	TIME
Shop repair costs (actual vs. standard)	COST		
Standard repair vs. actual	NUMBER	Number of item in AWP status	NUMBER
Stockage effectiveness	RATE	CND/RTOK at the depot	RATE
Tailgate to Stow/Delivery to Repair Shop	TIME	Shipment from Depot to Delivery by the Carrier	TIME

Combining Figure 5.2 (the Lean Logistics System) with the metrics shown in Table 6.1, results in Figure 6.1 that shows the system with the metrics and where they apply.

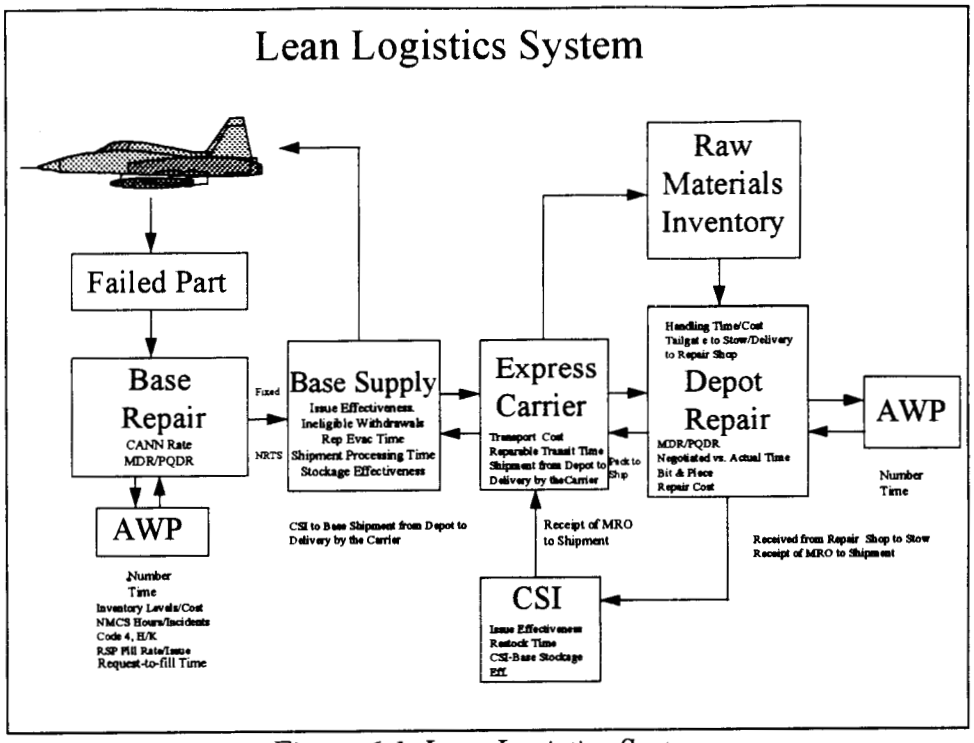

Figure 6.1 Lean Logistics System

While Figure 6.1 shows the metrics as they apply to the shop demonstrations, it is instructive to focus narrowly on those measures that apply to pipeline flow times only. Figure 6.2 simplifies the Lean Logistics system chart by providing that focus. It also labels the segments of the flows with letters for measurement purposes.

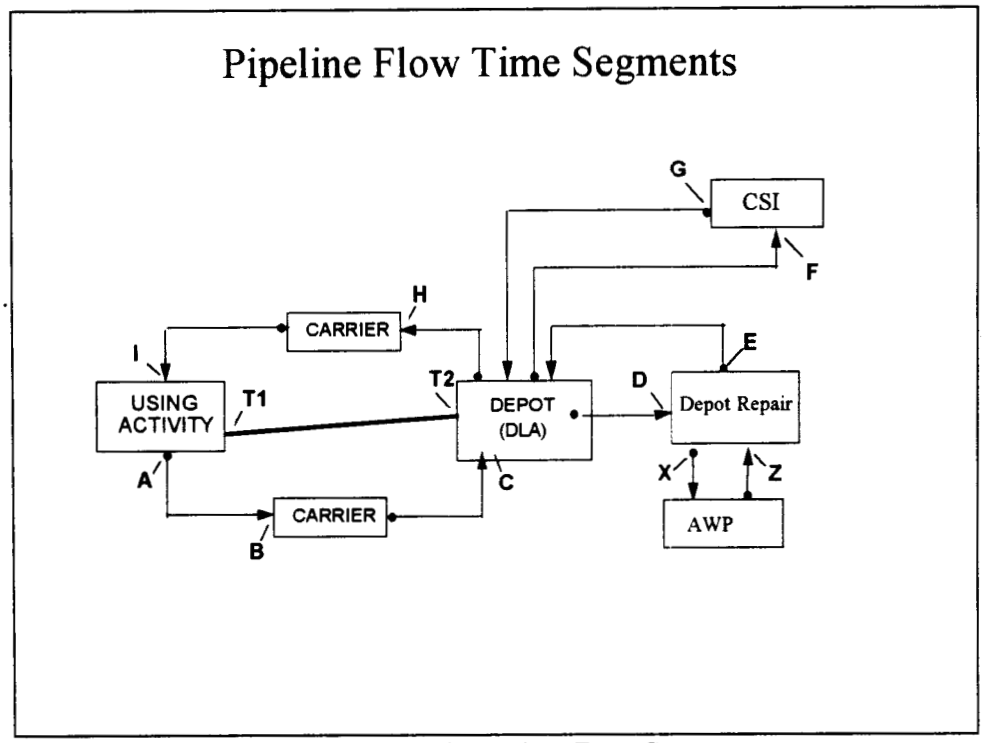

Figure 6.2 Pipeline Flow Time Segments

The nodes of the pipeline flow time chart are defined as follows:

- A-B — Base shipment processing time
- B-C — Reparable transit time
- C-D — Depot processing and depacking time
- D-E — Shop repair time
- E-F — Hand-off, Packing to CSI time (CSI is located at depot)
- E-H — Packing to shipping time (assumes bypass of CSI)
- G-H — CSI shipping time
- H-I — Serviceable transportation time
- T1-T2 — Transaction communication time
- X-Z — Awaiting parts time

Definitions are provided in Annex D.

The data analysis being prototyped now contains a subset of the metrics described above.

6.1.1 Data Analysis Procedures

The objective of the prototype tool is to acquire data from existing systems, calculate time durations for pipeline segments, perform some statistical analysis at the NSN and document/job control number levels, and display the results in clear, useful formats. The dimensions of interest at this time include NSN, location, weapon system, MAJCOM, time, and combinations.

6.1.1.1 Pipeline Times

- Retrograde Processing Time

  -NRTS to Shipping (ASB-D7A)
  -Base to Depot Transport Time (D6Z-ASB)
  -NRTS to Depot Receipt (D6Z-D7A)
- Depot Repair Processing Time

  -DLA Issue to Shop Receipt (D7XRA-D7X)
  -Shop Receipt to Shop Repair Complete (D6XT-D7XRA)
  -Shop Repair Complete to DLA Processing (D6XRT-D6XT)
  -Depot Receipt to DLA Processing (D6XRT-D7X)
- Order & Ship Time

  -Requisition at Base to Requisition Receipt at Depot (A0X-A0X_DOC)
  -Requisition Receipt at Depot to Release of Asset (A2X-A0X)
  -Depot Release of Asset to DLA Shipping (ASX-A2X)
  -DLA Shipment to Base Receipt (D6AB-ASX)
  -Requisition at Base to Receipt at Base (D6AB-A0X_DOC)

6.1.1.2 Depot Shop Repair

- Process ID Codes
  -ID Idle
  -MA Maintenance Analysis

-AP Awaiting parts
-CC Corrosion Control
-IW In work
-MS Machine Shop
-PT Paint
-RP Replace Part
-TS Troubleshoot
-CL Clean
-FT Final test

- Material Costs

6.1.1.3 Base Processing

- Report 203
- Time Buckets
  - -Pre-repair
  - -AWP
  - -Repair
  - -Post-repair
  - -CTR/PDM
  - -Gold Flag/B-2
- Exchange Price
- 2LM indicator
- DIFM create/Supply issue/Item turn-in Dates

Examples of some output products are displayed in Annex H. At this time data are quite limited but actions to significantly increase system data availability are in process.

6.2 Technical Implementation-Laws, Policies, Guidelines

Lean Logistics concepts affect laws, policies, guidelines, and the general nature of how the Air Force currently manages all aspects of logistics (reparable/serviceable item pipeline, transportation, acquisition, etc.). Each of the three major functional areas must have revised guidance to support Lean Logistics operations and improve efficiency. Table 6.2 presents a current listing of required changes, by functional area.

Table 6.2
Functional Area Changes

Functional Area	Current Guidance	Lean Logistics Guidance
Supply		
Maintenance		
Transportation		
Contracting		
Budget		

6.3 Technical Implementation-Repair Parts Availability and Acquisition Procedures

The Air Force currently experiences repair problems due to a lack of bit and piece parts and an acquisition procedure to quickly acquire needed parts. Even without the primary Lean Logistics initiatives, solving the problem of piece parts would certainly benefit the Air Force by reducing pipeline times. With Lean Logistics, it is imperative that this problem be resolved. Some parts are provided by the Air Force and some are provided by DLA. A mechanism is needed to provide responsive contracting to quickly and efficiently procure needed piece parts. In addition, consolidating piece part inventories and shipping them to repair shops via express carriers further reduces the size and length of the reparable/serviceable item pipeline. There are a number of initiatives that are or must be undertaken to improve the bit and piece part support. They include the following:

- PK involvement in expediting the resolution of shortages
- Improvement of information flows between the USAF and DLA
- Elimination of stock fund constraints on bit and piece parts
- Continuation of DLA's tailored logistics

Another issue that falls under the general category of contracting is how to integrate into Lean Logistics that portion of the reparable/serviceable pipeline that is supported through contractor repair. This is especially important where contractors and organic Air Force work together to repair items. AFMC demonstrations include the evaluation of contractor repaired LRUs.

Contracting involvement in Lean Logistics is increasing, including:

- PKP member from AFMC now on 06 Steering Group
- PKP action officer is now in Lean Logistics PMO
- PMO and Piece Part Availability PAT now operating
- ALC/PKs have been briefed by AF/LGM-2
- ALC focal points have been identified
- ALC/PK is now part of the integrated team supporting the AFMC shop and weapon system demonstrations.

The responsibilities of the ALC focal points include the following:

- Interface with Lean Logistics IPTs
- Identify and record actions needed to implement Lean Logistics for each demonstration (including both contract and depot repaired items)
- Document lessons learned
- Determine problem areas and appropriate "fixes"
- Recommend Lean Logistics acquisition strategies.

Action officer responsibilities at HQ AFMC include:

- Serve as clearinghouse for ideas and issues
- Alert ALCs to ongoing Lean Logistics issues
- Recommend policy changes
- Draft a Contracting Concept of Operations

Currently the contracting community sees a number of issues regarding the implementation of Lean Logistics that must be addressed. The Lean Logistics concept is not yet fully understood, somewhat due to the lack of uniform early involvement in Lean Logistics by all relevant parties. There still remains some "stovepiping" of analysis by functional areas. Finally, there is a widespread mistaken belief that acquisition strategy must be "one size fits all".

Current goals for the contracting community include developing a "tool kit" of contracting methods and acquisition strategies with appropriate metrics and measures of success, identifying policy and/or statutory inhibitions to the implementation of Lean Logistics, and to continue to work towards the Defense Secretary's challenge to reduce acquisition lead times by 50 percent by the year 2000.

6.4 Technical Implementation-Information Systems and Technical Data

Several logistics information systems are affected by the implementation of Lean Logistics concepts. These information systems will affect the success of Lean Logistics—in some cases, they require changes to their structure, data collected, processing, and display characteristics. They must be flexible and responsive so as not to slow down pipeline activities. Their responsiveness, accuracy, and accessibility must be consistent with Lean Logistics requirements. Changes to these systems will have cost impacts that can be directly attributed to Lean Logistics. Moreover, new information systems (or those in development) must be reviewed for their potential impact on Lean Logistics. The table below shows the information systems, transactions, data, and required changes for each major logistics functional area. Much of the information for these changes will be developed during the course of the AFMC shop demonstrations.

Table 6.3
Information System Impacts

Functional Area	Information System	Transaction	Data	Processing	Displays	Required Changes
Supply	SBSS					
	DO35					
	MO24					
Maintenance	CAMS					
	REMIS					
	TICARRS					
	EPS					
	IMDS					
	G081					
	DMMIS					
	G019C					
	G072A					
Transportation	GTN					
	CMOS					
	D035T					
Item Management	D043					
	D143					
	D041					

6.5 Cultural Implementation

Process improvements in large organizations often have cultural and institutional hurdles that must be addressed if the re-engineering effort is to be successful. There are some products and some processes that can be developed and used to overcome any institutional challenges to the implementation of Lean Logistics. One product is a Communication Plan that includes a presentation of a Lean Logistics briefing, other selected briefings on the various Lean Logistics initiatives, white papers and other background documents. Processes include a formal system of periodic communication transfer through program management reviews (PMRs) which are held for the user, provider, and management personnel. During implementation, sufficient oversight will be used to identify problem areas (and seek resolution). All those involved in Lean Logistics must communicate with their superiors about problems that develop, resolutions identified, potential new cost savings/avoidance, etc. Future versions of this Master Plan will incorporate relevant aspects of the Communication Plan.

6.6 Organizational and Educational Issues

The implementation of Lean Logistics requires a strategy that fosters institutionalization of the key concepts. A permanent "Working Group" is required that serve as the focal point for issues, problems, and concerns that arise during the implementation process. That group is now functional and directed by AF/LGM-2. Staff are available to work issues, resolve problems, and determine what needs to be surfaced to higher levels, including the Logistics Board of Advisors (BOA). The working group serves as the change agent for all logistics issues.

Education and training are required to inculcate Lean Logistics concepts throughout the Air Force. The programs require resources and might include the following:

- Logistics training course, with re-certification
- AFIT senior logistics class (05-06)
- Technical training
- OJT at places where the concepts are functioning properly
- Base newspaper articles

It is imperative that Air Force personnel understand how their efforts affect the overall Lean Logistics program, how metrics are used to evaluate operations, and how their personal incentives change under Lean Logistics.

7.0 Other Complementary Issues

7.1 Application of Lean Logistics Concepts to Other (Non-Aircraft) Systems

7.2 Cross-Service/Agency Impacts

7.3 Impacts on Personnel

7.4 Impacts on Facilities

7.5 Impacts on Cost

7.6 "DRIVE" Implications/Applications

7.7 Foreign Military Sales

8.0 Impact or Interaction with other Air Force/DoD Initiatives

8.1 TAV

8.2 IWSM

8.3 Contractor Repair

8.4 Transportation

8.5 Bar Coding for Serial Number Tracking

8.6 Standardization Initiatives

8.7 DoD Inventory Review Task Force

8.8 AFMC Excess Reduction Program

8.9 Acquisition

8.10 PICA/SICA Relationships

Annex A - Lean Logistics Communication Plan

LEAN LOGISTICS DEFINITIONS

Air Mobility Express (AMX) AMX is the military adaptation of commercial overnight delivery that consists of (1) express carrier's CONUS infrastructure, (2) AMC airlift (organic/CRAF), and (3) the theater distribution system for express shipments. CRAF carriers provide DOD not only the use of aircraft, but their integrated CONUS express infrastructure. Express carrier's distribution structure will be used to pick-up/deliver cargo to/from their hubs where the carrier's personnel will load, off-load, and service AMC airlift missions. AMC will provide daily round trip direct service between the express carriers CONUS hub(s) and the designated APOD(s) in the theater of operations. The theater commander will establish a distribution system that provides next day delivery of critical cargo.

Awaiting Part Time (AWP) Elapsed time a reparable spends awaiting parts while in the repair cycle.

Base Lean Level Authorized stock for storage, includes AWP and AWM assets, and immediate use at the base level, as influenced by the base daily demand rate, base repair cycle time, percent of base repair, and order and ship time (OS&T) from the consolidated serviceable inventory. This level may fluctuate based upon use at the bases. Total quantities authorized may be fixed lower or higher based upon consumption.

Consolidated Serviceable Inventory(CSI) The centralized serviceable asset inventory, stored at the source of repair, which acts as a serviceable buffer to provide responsive and ? support in filling customer requirements.

Consolidated Serviceable Inventory(CSI) Level The quantity of serviceable inventory maintained at the source of repair necessary to accommodate all of the user requirements. This level will fluctuate based upon changes in customer consumption and the responsiveness of the Lean Logistics support system.

Customs Electronic Data Interchange (EDI) An initiative to eliminate the manual, labor-intensive military clearance procedures with an efficient, all electronic system where customs information is passed electronically from military shipping activities to overseas customs clearance offices. Cargo is pre-cleared by host nation customs before it physically reaches the country and is expedited to the customer.

Distribution and Repair in a Variable Environment (DRIVE) A mathematical model used by the source of supply/repair to prioritize repair and distribution of assets to the users from the source of repair or the consolidated serviceable inventory. Considers base flying activity, asset position and aircraft availability goals as established by the Air Staff. MAJCOM provides flying hours and other command related up-to-date data to maintain priority sequences.

Door-To-Door Distribution (D3) The Air Force replaced LOGAIR by moving high-priority cargo via commercial express overnight service. D3 service involves commercial express carrier pick-up of cargo at the designated points on base, and time-definite delivery of the cargo to a designated receiving location (another base, depot; CONUS and OCONUS) while maintaining complete intransit visibility. D3 can further increase shipment velocity if cargo is moved directly from the point of issue to point of receipt (i.e., base to depot or depot to base). D3 is most effective when

base-level handling nodes are eliminated and unserviceable parts move directly from the customer (maintenance) to the source of repair; and returning serviceable parts are delivered directly to the customer. Handling and waiting time is reduced by by-passing traditional supply and transportation modes and nodes.

Express Table A file in the Stock Control and Distribution System(SC&D, DO35) that identifies items to be issued to maintenance upon receipt in Central Receiving.

Express Transportation Express Transportation leverages the relatively low cost and high reliability of fast transportation against the high cost of maintaining large inventories of spare parts. Express transportation will be used to speed the shipment and return of lean logistics items.

In-Place Readiness Spares (IRSP) (Replaces BLSS) Spares and repair parts of RSP intended for use as base support for units that plan to operate in place during wartime using the remove and repair, and replace (RRR) concept.

Ineligible Stock Assets above the authorized lean levels or those contained in the CSI. These assets, for the purposes of the demonstration, will be considered stock not usable either by the bases or the PDM line unless a MICAP situation exists. These stocks are considered excess to the demonstration requirement based upon new OS&T and depot repair times. At the depots, the item managers will place the serviceable assets in ownership purpose code B, and unserviceable in condition code J. The bases will also be required to identify stock at the base as excess when the total number available exceeds the authorized lean quantity.

Mobility Readiness Spares Packages (MRSP) (Replaces WRSK) An air transportable package of spares and repair parts required to sustain planned wartime or contingency operations of a weapon or support system for a specified period of time pending resupply.

Order and Ship Time (O&ST) Represents the expected number of days between initiation of a requisition and receipt of the stock by the user.

Repair and Return Packaging (R2P) R2P has three components: First, take maximum advantage of door-to-door distribution and express transportation. Second, shipments authorized under R2P are centrally (DBOF) funded--no cost to base transportation accounts. Third, it implements a best business practice of return package labeling adapted from the commercial mail-order catalog industry. A return label is placed in the box of a serviceable item before it is shipped from the depot. Upon receipt of a serviceable item, the unserviceable part is placed in the same reusable container, the pre-addressed express carrier shipping label from within the box is attached, and the item is shipped directly from the flightline to the source of repair. The R2P process was created to expedite base-level handling nodes, move parts into the transportation system quickly, and reduce improve the return of unserviceable items to the source of repair as soon as possible.

Reparable Item Movement Control System Code (RIMCS) A code that directs the disposition of unserviceable materiel to repair, storage, or disposal.

Retrograde Reparable carcasses returning to the depot from operating locations.

Rapid Theater Distribution System (RTDS) A theater-established rapid intra-theater distribution system to lash-up with AMX. Theater assets (C-12, Helicopter, COD, panel van) await the arrival of AMX at the theater distribution hub (similar to the CONUS hub) and after a fast sort cargo is delivered direct to forward units.

LEAN LOGISTICS ACRONYMS

A/C	Aircraft
ACC	Air Combat Command
AETC	Air Education and Training Command
AF	Air Force
AFB	Air Force Base
AFC4A	Air Force Command Control Communications & Computer Agency
AFCSSO	Air Force Contingency Supply Support Office
AFIT	Air Force Institute of Technology
AFLC	Air Force Logistics Command
AFLIF	Air Force Logistics Information File
AFLMA	Air Force Logistics Management Agency
AFMC	Air Force Materiel Command
AFSEB	Air Force Supply Executive Board
AFSWPWG	Air Force Supply Wartime Policy Work Group
ALC	Air Logistics Center
AMC	Air Mobility Command
AMX	Air Mobility Express
ANG	Air National Guard
AOR	Area of Responsibilty
API	Application Part Indenture
APOD	Aerial Port of Debarkation
APOE	Aerial Port of Embarkation
ATAC-AF	Advanced Traceability and Control for Air Force
ATCALS	Air Traffic Control and Landing System
ATLIS	Avionics Two-Level Integration System
AWM	Awaiting Maintenance
AWP	Awaiting Parts
BLSM	Base Level System Modernization
BLSS	Base Level Supply Stock
BOA	Board of Advisors
C-E	Communication-Electronics

CAMS	Core Automated Maintenance System
CANN rate	Cannibalization rate
CIM	Corporate Information Management
CINC	Commander in Chief
CLCC	Command Logistics Control Center
CMOS	Cargo Movement Operating System
CND/BCS	Cannot Duplicate/Bench Check Serviceable
CONOPs	Concept of Operations
CONUS	Continental United States
COPAR	Commercial Parts Store
CPFH	Cost Per Flying Hour
CRAF	Civil Reserve Air Fleet
CSI	Consolidated Serviceable Inventory
CSMS	Combat Supplies Management System
CTO	Commercial Transportation Office
D3	Door-to-Door Distribution
DAAS	Defense Automated Addressing System
DIFM	Due In From Maintenance
DLA	Defense Logistics Agency
DLR	Depot Level Reparable
DMIF	Defense National Industrial Fund
DMMIS	Depot Maintenance Management Information System
DoD	Department of Defense
DRIVE	Distribution and Repair in a Variable Environment
DSS	Distribution Standard System
EDI	Electronic Data Interchange
EOQDL	Economic Order Quantity Demand Level
EPS	Exchangeable Production System
ERCC	Engine Regional Repair Center
FAA	Federal Aviation Administration
FMS	Foreign Military Sales
FOA	Forward Operating Agency
FY	Fiscal Year

GR-GP	Global Reach-Global Power
GTN	Global Transportation Network
I2P	Industry Information Processor
ICS	Interim Contractor Support
IDEF	Integrated Definition
IMDS	Integrated Maintenance Data System
IRSP	In-Place Readiness Spares
ITS	Inventory Tracking System
ITV	Intransit Visibility
IWSM	Integrated Weapon System Management
JCN	Job Control Number
L2C2	Lean Logistics Command and Control
LASER	Logistics: A Support Environment Re-engineered
LRU	Line Replaceable Unit
M3	Mail-like Matter Movement
MAJCOM	Major Command
MHE	Material Handling Equipment
MICAP	Mission Capable Part Missing From Aircraft
MISTR	Management of Items Subject to Repair
MRC	Major Regional Conflict
MRSP	Mobility Readiness Spares Packages
MTMC	Military Traffic Management Command
MTS	Material Tracking System
NASA	National Aeronautics and Space Administration
NMCS	Not Mission Capable Supply
NOP	Non-optimized
NRTS	Not Reparable This Station
NSN	National Stock Number
OC-ALC	Oklahoma City Air Logistics Center
OJT	On the Job Training
OO-ALC	Ogden Air Logistics Center
OPR	Office of Primary Responsibility
OPTEMPO	Operational Tempo

ORA	Operational Readiness Assessment
O&ST	Order and Ship Time
PDM	Programmed Depot Maintenance
PICA	Primary Inventory Control Activity
PMEL	Precise Measurement Equipment Laboratory
PMR	Program Management Review
POL	Petroleum Oil and Lubricants
PQDR	Product Quality Deficiency Report
R&M	Reliability and Maintainability
R2P	Repair and Return Packaging
RDS	Rapid Distribution System
REMIS	Reliability and Maintainability Information System
RIMCS	Reparable Item Movement Control System
RMI	Raw Materials Inventory
RRR	Remove, Repair and Replace
RSD	Reparable Support Division
RSP	Readiness Spares Package
RTDS	Rapid Theater Distribution System
RTOK	Retest Okay
SA-ALC	San Antonio Air Logistics Center
SBSS	Standard Business Supply System
SC&D	Stock Control and Distribution System
SCS	Stock Control System
SEMR	Sustainability Executive Management Review
SICA	Secondary Inventory Control Activity
SM-ALC	Sacramento Air Logistics Center
SOR	Source of Repair
SOSS	Supply Ordering and Sourcing System
SQL	Systems Query Language
SRU	Shop Replaceable Unit
TAV	Total Asset Visibility
TCN	Transportation Control Number
TICARRS	Tactical Interim CAMS and REMIS Reporting System

TMO	Transportation Management Office
TOC	Theory of Constraints
U.S.	United States
UMMIPS	Uniform Materiel Movement and Issue Priority System
USAF	United States Air Force
WR-ALC	Warner Robins Air Logistics Center
WRSK	War Reserve Spares Kit (new RSP)
WSMIS	Weapon System Management Information System
2LM	Two Level Maintenance

BIBLIOGRAPHY (With Some Annotations)

AFLMA, *Analysis of Contract Repair for Lean Logistics*, AFLMA Project LS9535300.

This project will investigate the process used to award repair contracts to determine if the current method yields performance consistent with Lean Logistics objectives.

AFLMA, *Analysis of Defense Reutilization and Marketing Office (DRMO) Stocks Study*, AFLMA Project LS9435200, Oct/Nov 1994.

AFLMA, *Analysis of D028 Levels for Strategic Airlift Study*, AFLMA Project LS9411810, July 1994.

AFLMA, *Analysis of Expendable Asset (XB3) Retail Retention Policy Study*, AFLMA Project LS922162, April 1994.

AFLMA, *Analysis of Field-Reparable (XF3) Retail Retention Policy Study*, AFLMA Project LS930122, May 1994.

AFLMA, *A Relook at Air Force Stock Leveling Issues*.

This project addresses the issue of how the Air Force computes base levels so that they are consistent with what the depot is doing. AFLMA will evaluate various alternative proposals and make recommendations to the Air Force supply community. Of particular interest are issues such as push vs. pull system, stable vs. responsive, wartime/peacetime integration, asset based vs. requirements based, multi-echelon, and data sensitivities.

AFLMA, *Assessment of TF33-7A Two-Level Maintenance Costs*, AFLMA Project LM9530500.

This project assesses TF33-7A maintenance costs and associated maintenance manpower requirements at wings, MAJCOM, and depot levels. Actual jet engine intermediate maintenance (JEIM) material costs from eight bases that are operating under three levels of maintenance and two bases operating under 2LM will be compared.

AFLMA, *Communications-Electronics (C-E) Lean Logistics Demonstration*, AFLMA Project LS9425500.

The main objective of the C-E Lean Logistics demonstration is to show that lean logistics concepts can be integrated to provide less costly support of C-E items. This effort will establish an approach to convert all C-E areas into lean operations mode.

AFLMA, *Cost Analysis of lean Logistics Consolidated Storage Sites*, ALFMA Project LS9529000.

An analysis is being conducted to indicate whether CSIs should be located at the source of repair or at a MAJCOM operated site. Additional analysis is being conducted to determine the cost/savings associated with a DLA proposal to locate CSIs at Memphis.

AFLMA, *Defense Automated Addressing Service (DAAS) Reporting Frequency Analysis Study*, AFLMA Project LS9402300, September 1994.

AFLMA, *Lean Logistics AWP Assessment*, AFLMA Project LS9422200.

This project assesses bit and piece supportability for the WR-ALC Lean Logistics shop demonstration. The goal is to assist WR-ALC in creating the best accountable bench stocks of bits

and pieces to support the demonstration. This project will provide a road-map for future shop demonstrations detailing a method which will assure adequate bit an piece support.

AFLMA, *Reparable Items Movement Control System (RIMCS) Data Flow Validation Study*, AFLMA Project LS932351, June 1994.

ALFMA, *Transportation Lean Logistics Initiative*, AFLMA Project LT9408800.

This project is an effort to quantify the transportation costs associated with future two level maintenance requirements. Costs associated with changing current policy for movement of all airlift investment coded and MICAP items as well as any spares requirements and inventory reductions that may occur due to a shorter pipeline will be also be quantified.

Alford, Smsgt Richard G., et. al., *Analysis of Expendable Asset (XF3) Retail Retention Policy*, AFLMA Final Report LS930122, Air Force Logistics Management Agency, April 1994.

The characteristics and amounts of retention stock for consumables at four bases were analyzed to assess the current Air Force policy of retaining expendable assets a minimum of 30 months. Five alternative retention policies were evaluated in terms of cost and expected backorders.

Bunker, Capt Paul L., et. al., *Communication-Electronics (C-E) ISSL Regionalization* , AFLMA Final Report LS922152 .

This study was used as background and input into the design of the C-E Lean Logistics demonstration.

Campbell, Lt Col Hugh, et. al. , *Assessment of HQ ACC/LG Proposal: Regionalize Intermediate Maintenance for the T56 Engine*, AFLMA Final Report LM94203000, Air Force Logistics Management Agency, September 1994.

This study focused on an analysis of an ACC proposal to regionalize intermediate maintenance for the T56 engine. ACC's concept of operation envisioned engine maintenance support using MAJCOM Engine Regional Repair Centers (ERRC) as an alternative to depot Two Level Maintenance (2LM). The report concluded that engine costs for the T56 and manpower requirements are reasonably similiar, whether repaired at the JEIM facility under 2LM or under an ERRC concept.

Cohen, I.K. and R.A. Pyles, *Empowering the Commands to Provide Logistics Support,* Rand Corporation, Volume X, Number X, 1992.

Cohen, I.K., R.A. Pyles and R.A. Eden, *Lean Logistics: A More Responsive, Robust, and Affordable* System, DRR-630-AF, January 1994.

Cohen, I.K., R.A. Pyles and R.A. Eden, *Lean Logistics: A More Responsive, Robust, and Affordable System, Executive Summary*, Santa Monica, CA, Rand Corporation, draft May 1994.

Johnson, Capt James, et. al., *Analysis of Airlift Investment Policy*, AFLMA Final Report LS930051, Air Force Logistics Management Agency, November 1993.

The study analyzes the current Air Force policy of transporting centrally procured investment (ERRC XD) items by commercial airlift in a premium/expedited mode. The one time pipeline savings are compared with recurring increased transportation costs. The Aircraft Availability Model was used to develop pipeline requirements. In addition, the impact on next-day delivery was assessed.Pyles, Raymond A. and I.K. Cohen, *Using Emerging Business Practices to Meet New Logistics Challenges*, Santa Monica, CA, Rand Corporation, IP-108, September 1993.

Ramey, Timothy L. and Raymond A. Pyles, *Would "Just in Time" Improve Logistics Responsiveness and Cost* , Santa Monica, CA, Rand Corporation, IP-110, September 1993.Reynolds, Capt Steve, et. al., *AMC Lean Stock Levels*, AFLMA Final Report LS940390, Air Force Logistics Management Agency, March 1994.

A test of Lean Logistics policies is described that involved 31 recoverable assets for the C-5 aircraft located at 6 bases. Four alternative policies involving centralized storage facilities (CSFs) for the serviceable inventory were analyzed. Computer simulation was used to develop estimates of the inventory costs and performance, measured in terms of the number and average duration of MICAPs.

Reynolds, Capt Steve, et. al., *Inventory Levels for the WR-ALC Lean Logistics Shop Test*, AFLMA Final Report LS941100, Air Force Logistics Management Agency, June 1994.

Computed base and depot spares levels in a Lean Logistics environment are given for 75 avionics components used on C-130, E-3, and KC-135 aircraft. The components are repaired at the Warner-Robins ALC, GA. Computations are based on decreased transportation times for serviceable assets and reparable carcasses and immediate transferring of failed components to the depot. The results are to be used for implementation of the Lean Logistics test.

Reynolds, Capt Steve, et. al., *Depot Level Reparable (DLR) Ownership Asset Requirements*, Letter Report, AFLMA Project Number LS9417300, Air Force Logistics Management Agency, June 1994.

Three alternative scenarios were evaluated to provide information for a demonstration program on the effect of segregating DLR assets by wing, with no lateral support permitted. The scenarios are the current system, DLR ownership, and Lean Logistics. For the last two, accelerated retrograde and order and ship times were assumed. Pipeline requirements were computed for 43 stock numbers and the resultant costs compared.

Reynolds, Capt Steve, et. al., *Lean Logistics Visibility Tool*, AFLMA Final Report LS9412000, Air Force Logistics Management Agency, September 1994.

WR-ALC is testing a depot repair shop to determine whether it is feasible to transition from the current batch repair mode to a more responsive mode where base assets are repaired once they are broken. The inventory manager and the production scheduler will periodically review inventory balances to isolate and correct pipeline problems and adjust inventory levels. A management tool was designed to provide daily asset visibility, pipeline analysis data, asset position information, and historical transaction-based information.

Reynolds, Capt Steve, et. al., *OC-ALC Lean Logistics Shop Demonstration Consolidated Serviceable Inventory (CSI) Levels*, AFLMA Final Report LS9531840, Air Force Logistics Management Agency, December 1994.

The purpose for the OC-ALC Lean Logistics shop demonstration is to assess whether the depot can provide better customer support by changing existing processes. During the demonstration the depot will repair items that actually fail in the field . The SBSS Repair Cycle Demand Level methodology was used to compute CSI levels for the demonstration items. The CSI levels are provided in Appendix B of the report.

Reynolds, Capt Steve, et. al., *SA-ALC Lean Logistics Shop Demonstration Consolidated Serviceable Inventory (CSI) Levels*, AFLMA Final Report LS9531850, Air Force Logistics Management Agency, December 1994.

The purpose for the SA-ALC Lean Logistics shop demonstration is to assess whether the depot can provide better customer support by changing existing processes. During the demonstration the depot

will repair items that actually fail in the field . The SBSS Repair Cycle Demand Level methodology was used to compute CSI levels for the demonstration items.

Rice, Donald B., *The Air Force and U.S. National Security: Global Reach: Global Power*, United States Air Force, 1990.

Schloz, Capt Lois J., et. al., *Aircraft Depot Level Reparable Cost Per Flying Hour Lessons Learned*, LM931581, Air Force Logistics Management Agency, May 1994.

Depot Level Reparable (DLR) cost per flying hour (CPFH) values were evaluated to determine the cause of the wide disparity among bases. The current methods of computing DLRs were reviewed and operational and environmental differences among bases were analyzed for six F-15C/D and six KC-135R bases. A standardized DLR cost computation was developed during the study to allow a consistent means of comparing the results across bases.

Syzdek, Capt Mark A., et. al,. *Reducing Base Stock Level Stocks by Revising the Economic Order Quantity Demand Level Model*, AFLMA Final Report LS933431, Air Force Logistics Management Agency, April 1994.

The Standard Base Supply System (SBSS) computation for economic order quantity demand level (EOQDL) is examined to determine ways of reducing inventories of consumables. Twenty-five alternative models were evaluated in terms of inventory reduction and percentages of due-outs.

Womack, James P., Daniel T. Jones and Daniel Roos, The Machine That Changed the World, Harper Perennial, 1990.

Annex D - Road Map

L2 Goals & Objectives	OPR	OCR	BEGIN	END
Implement Lean Logistics for DLRs	AF/LGM-2	AFMC/LG-LL	94Q2	97Q4
Reduce DLR Annual Investment Expenditure by $TBD (FY93 Constant $)	AF/LGM-2		95Q1	96Q4
Implement L2 bit & piece support for DLRs; coordinate with DLA	AF/LGM-2	AFMC/LG-LL HQ DLA	94Q4	96Q2
Implement Lean Logistics for Other Logistics Functions	AF/LGM-2			98Q4
Determine DLR Inventory savings (study)	AF/LGS	AFMC/LG-LL LMI	95Q1	95Q3
Reduce Average Inventory Pipeline Times by TBD % for DLRs	AF/LGM-2	AF/LGS	94Q4	96Q4
Determine RSP Requirements with Lean Logistics (study)	AF/LGS	AF/LGM-2 LMI	95Q1	96Q1
Coordinate with other Services	AF/LGM-2		94Q4	Ongoing

L2 Master Plan	OPR	OCR	BEGIN	END
First Draft of MP	AF/LGM-2	All	94Q3	94Q3
Solicit MAJCOM input to Master Plan	AF/LGM-2	MAJCOMs	94Q4	94Q4
Second Draft of MP	AF/LGM-2	All	94Q4	94Q4
Baselined MP (Target: Jan, 1995)	AF/LGM-2	All	94Q4	95Q1
Master Plan Updates and Revisions	AF/LGM-2	All		As Req.
Draft MAJCOM Implementation Plans	MAJCOMs	AF/LGM-2	95Q1	95Q1
Baselined MAJCOM Implementation Plans	MAJCOMs	AF/LGM-2	95Q1	95Q2

L2 Communications Plan	OPR	OCR	BEGIN	END
AF/LG Logistics Vision Briefing to USAF/LGs	AF/LGM-2		95Q1	95Q1
AF/LG Logistics Vision to theater planners	AF/LGM-2		95Q1	95Q1

L2 Communications Plan	OPR	OCR	BEGIN	END
Article(s) in AF Publication(s)	AF/LGM-2	AFLMA	95Q1	95Q1 Ongoing
Briefings & Meetings as req.			94Q2	Ongoing
Visits by AFMC/LGI-LL and AF/LGM-2 to MAJCOMs			94Q3	94Q4
Develop training and education plan for L2	AF/LGM-2	AFMC/LG-LL Rand AFIT AETC	95Q1	95Q2

L2 Conversions	OPR	OCR	BEGIN	END
E-3 Weapon System Conversion Plan	OC-ALC	AFMC/LG-LL	94Q4	94Q4
Nav/Radar Shop Demo	WR-ALC	AFMC/LG-LL	94Q3	94Q4
Oxygen Shop Demo	OC-ALC	AFMC/LG-LL	94Q3	94Q4
F-16/CSI Demo	OO-ALC	AFMC/LG-LL	94Q3	94Q4
Comm-Electronics Shop Demo	SM-ALC	AFMC/LG-LL	94Q2	94Q4
C-5/CSF Demo	SA-ALC	AFMC/LG-LL	94Q2	94Q4
C-5 Phase II Weapon System	SA-ALC	AFMC/LG-LL	95Q1	95Q1
Hydraulics Shop Demo	SM-ALC	AFMC/LG-LL	95Q1	95Q1
Elec. Engine Controls Demo	SA-ALC	AFMC/LG-LL	95Q1	95Q1
Analyze Demo lessons learned	AF/LGM-2	AFMC/LG-LL	94Q4	Ongoing
Develop Implementation Plan to convert remainder of DLR shops to L2 in phases	AFMC/LG-LL	AF/LGM-2	94Q4	95Q1
Convert L2 Phase II Shops	AFMC/LG-LL		95Q1	95Q4
Convert L2 Phase III Shops	AFMC/LG-LL		96Q1	96Q4
Convert Remaining DLR shops	AFMC/LG-LL		97Q1	97Q4

L2 Wartime/Mission Exercises	OPR	OCR	BEGIN	END
Develop plan to test L2 wartime/mission effectiveness during exercises	AF/LGM-2	AFMC/LG-LL Rand MAJCOMs	95Q2	95Q3
30 Day ACC Exercise	AF/LGM-2	ACC	95Q3	95Q3

L2 Wartime/Mission Exercises	OPR	OCR	BEGIN	END
Large JCS Exercise to austere locations	AF/LGM-2	AFMC/LG-LL JCS		
AFSOC Exercise	AF/LGM-2	AFSOC	95Q2	95Q2
Exercise L2 for each transportation/contingency	AF/LGM-2	AFMC/LG-LL JCS		As Req.
Incorporate L2 into theater plans	AF/LGM-2	JCS	95Q4	95Q4
PACOM Test/RDS	PACOM	AF/LGM-2		

L2 Metrics	OPR	OCR	BEGIN	END
Track L2 Metrics for Demo Shops	AF/LGM-2	AFMC/LG-LL	94Q4	95Q1
Implement L2 Metrics in SEMR	AF/LGM-2	AF/LGYM	95Q2	95Q3
Implement AF-wide customer responsiveness measures covering the total pipeline for DLRs	AF/LGM-2	MAJCOMs	95Q1	95Q3

L2 Analyses	OPR	OCR	BEGIN	END
L2 Improved Contracting Study	AF/LGM-2	Rand	94Q4	
Organizational Innovation	AF/LGM-2	Rand	94Q4	
Support for Demos and C-5	AF/LGM-2	Rand	94Q4	
Improved WRM Policy	AF/LGXX	Rand	94Q4	
Financial Management (Indirect Costs) Study	AF/LGM-2	Rand	94Q4	
End-to-end Supply Process under L2 study	AF/LGM-2	Rand		
Lean Logistics AWP Assessment	AFLMA	AFMC/LG-LL WR-ALC		95Q1
Relook at AF Stock Leveling Issues under Lean Log	AFLMA	AFMC/LG-LL LMI	94Q4	95Q2
C-E Lean Logistics Demo levels setting	AFLMA		94Q3	95Q1
Cost Analysis of Lean Log. Consolidated Storage Sites	AFLMA	AFMC/LG-LL		95Q1
Transportation Lean Log Initiative	AFLMA			95Q2
Analysis of Contract Repair for Lean Log	AFLMA			95Q1

L2 Analyses	OPR	OCR	BEGIN	END
Shop Demo Data and Metrics Analysis	AF/LGM-2	AFMC/LG-LL		Ongoing
Analysis of Potential Inventory Reductions	AF/LGS	LMI AF/LGM-2	94Q4	
Evaluate L2 in Modeling and Simulation environments	AF/LGM-2		95Q1	95Q1
L2 Functional CONOPS Policy Development/AFI for Supply, Maintenance, Transportation, and Plans	AF/LGM-2	AF/LGS AF/LGM AF/LGT AF/LGX	95Q1	95Q3
Develop Lean Log system-wide evaluation model	AF/LGM-2	AFMC/LG-LL	95Q1	95Q2

L2 Command and Control	OPR	OCR	BEGIN	END
ATAC PMR	AF/LGM-2		95Q1	95Q1
ATAC-AF, Phase 2	AF/LGM-2		95Q1	95Q2
ATAC-AF, Phase 3	AF/LGM-2		95Q2	95Q3
Evaluate Design for an L2 Command and Control System	AF/LGM-2		95Q1	95Q2

L2 Information Systems	OPR	OCR	BEGIN	END
Identify information system/L2 relationships and impacts	AF/LGM-2		95Q1	95Q1
Realign development plans for logistics information systems to support L2 functionality	AF/LGM-2		95Q2	95Q3
Design and Prototype L2 Information System	AF/LGM-2		95Q2	95Q3

L2 Regs, Policies, Procedures	OPR	OCR	BEGIN	END
Identify impact of L2 on regulations, policies, procedures	AF/LGM-2		95Q1	95Q2
Recommend changes to regs, policies, procedures due to L2	AF/LGM-2		95Q3	Ongoing
Implement changes to regs, polices, procedures due to L2	AF/LGM-2		96Q2	Ongoing

L2 Other Initiatives	OPR	OCR	BEGIN	END
Coordinate with existing Supply working groups	AF/LGM-2	AF/LGS	94Q4	Ongoing
Redefine Supply Policy	AF/LGS	AF/LGM-2	94Q4	95Q1
Develop Stockage Retention Policy	AF/LGS	AF/LGM-2	94Q4	95Q1
Realize O&M and Personnel Savings generated by consolidating inventories	AF/LGS	AF/LGM-2		Contin.
Realize facilities savings generated by consolidating inventories	AF/LGS	AF/LGM-2		Contin.
Coordinate AFMC Reengineering efforts	AFMC/LG-LL	AF/LGM-2	94Q4	Ongoing
Integrate L2 and the WSCR Program	AF/LGM-2	AF/LGS	95Q1	Ongoing
Develop contracts for Bit & Piece support and contractor repair	AF/AQC	AF/LGM-2 DLA	95Q1	95Q2
Coordinate ERRC	ACC		94Q4	Ongoing
Cross-service/agency L2 coordination	AF/LGM-2		94Q4	Ongoing
Implement AMX	AF/LGT	AF/LGM-2	95Q4	Ongoing
Complete Implementation of R2P	AF/LGT	AF/LGM-2	94Q3	
Implement M3	AF/LGT	AF/LGM-2		
Implement I2P	AF/LGT	AF/LGM-2		
Implement a theater RDS	AF/LGT	AF/LGM-2		95Q2

Annex E - Metrics

Table of Metrics

METRIC	DEFINITION	ALC	Source/ Segment on pipeline[13]	OPR[14]	TYPE
AWP incidents	Number of times the depot or base has to go AWP	ALL	EPS	ALC/Base	Number
AWP time	Elapsed time a reparable asset spends awaiting both "F"&"G" condition parts while in the repair cycle.	ALL		ALC/Base	TIME
Number of unfilled customer orders	Number of requisitions that the Item Manager could not fill. when received.	ALL		ALC/Base	Number
Base issue effectiveness	Issue effectiveness at the base level will be a measurement indicating the fill rate based on customer demands for those items not directly issued out of the CSI, but, are issued from the customers' local base supply critical stock. The metric will indicate the percentage of time the base can immediately fill a customers requirement divided by the total number of customer requests.	ALL	R15 from SBSS (March '95)	Base	RATE
Stockage Effectiveness	A measure of whether base supply or depot CSI has a component that it is authorized to stock.	ALL		ALC/Base	RATE
Base reparable evacuation time	The evacuation time is the time the reparable asset sits at the using base while awaiting processing prior to shipping the asset to the repair center. This time will be tracked by the users through the CAMS or SBSS systems. In most cases, this time should not exceed 2 days because of the required asset release after receipt of a serviceable asset.	ALL	ATAC-AF	Base	TIME
Base shipment processing time	Elapsed time from not reparable this station (NRTS) turn-in to supply until shipment processing off base with express carrier.	ALL	A-B	ALC	TIME
Reparable transit time	Reparable transit time is the time it takes for a reparable asset to get from the using activity's base to depot receiving. Available through AFLIF and/or ATAC and AFLMA visibility tool.	ALL	B-C	ALC	TIME
Receipt of MRO to Shipment	Elapsed time to process item from CSI warehouse storage to express shipping.	ALL	G-H	DLA	TIME
CSI fill rate	Quantity of assets in CSI/CSI level	All		ALC	Number
CSI issue effectiveness	Issue effectiveness is the ability of the CSI to fill a customer requirement with a serviceable asset once a demand is made. Issue effectiveness will be a measurement that compares the number of customer demands placed against the CSI against the total issue made from it. This metric will indicate the percentage of time the CSI can immediately fill a customers requirements divided by the total number of customer requirements.	ALL	Financial Management		RATE
Tailgate to Stow/ Delivery to Repair Shop	The time between depot receipt of the asset until the asset is received in the repair shop.	ALL	C-D	DLA	TIME
DLA handling costs	Handling costs will be tracked so costs associated with future transactions can be projected. In addition, cost factors will assist further analysis of transportation methods for other assets based on size, weight, etc. Cost comparisons will be made to determine the impact on DLA handling costs resulting from expedited processes.	ALL		DLA	COST
Ineligible withdrawals	The number of each ineligible withdrawal will be tracked in order to provide lessons learned and input to future CSI computations. Each occurrence will be accounted for as well as support information as to why, when and what caused the draw from the ineligible stock.	ALL		ALC and Base	Number
Inventory levels	Pre-demo and during-demo inventory levels to shows how levels are changing under the Lean Logistics processing	ALL		ALC	Number

[13] Segment on pipeline refers to Figure 6.1.2 in the Master Plan. All measurements are made through the LMA visibility tool at this time, to be replaced by ATAC-AF at a later date.
[14] OPR refers to the organization or functional level providing the data.

MDR and PQDR incidents	Each NSN in the demo will be monitored for any MDRs and PQDRs generated against them during the conversion plan period. History of period MDRs and PQDRs will be reviewed for potential trends. Their occurrence factors will be noted and considered during CSI computations and lean level readjustments.	ALL		ALC	Number
Actual vs. standard repair	Compares the actual repair time of each NSN to the standard repair time. Standard time does not include AWP time.	ALL	IM GO19C	ALC	Number
NMCS hours (MICAP)	Hours of NMCS is the total hours that the NSN was out of commission. The time begins when a MICAP is generated and ends when the MICAP is satisfied. (D165B)	ALL		MAJCOM	HOUR
NMCS incidents	Incidents of NMCS is the occurrence factor of out of commission status for a particular piece of equipment. (D165B)	ALL		MAJCOM	Number
NRTS actions	Number of NRTS actions	ALL		MAJCOM	Cost Number
Number of cause code H/K NMCS	The cause code for the existence of a partial, non-mission capable, supply (MICAP) condition. The cause code and number of occurrences on each asset in NMCS will be tracked and used to analyze impacts on CSI levels.	SMALC SA-ALC		Base MAJCOM	
Received from Repair Shop to Stow	Elapsed time from repair shop turn-in of serviceable to DLA until asset is warehoused in CSI.	ALL	E-F	DLA	TIME
Receipt of MRO to Shipment	Elapsed time from repair shop turn-in of serviceable to DLA for shipment to customer until asset is actually shipped.	ALL	E-H (no CSI)	DLA	TIME
Request-to-fill time	Elapsed time from receipt of customer requirement at depot until the serviceable asset is delivered to the base.	ALL	T2-I	ALC DLA	TIME
RSP fill rate	The ratio or percentage that measures the ability to obtain and maintain required spare assets for RSP. The total of required stock on hand items divided by the authorized requirement is the RSP fill rate for that system.	ALL	SBSS	MAJCOM	RATE
RSP issue	The number of times items have been removed from RSPs.	ALL	WSMIS Delete codes	Base MAJCOM	Number
Shipment from Depot to Delivery by the Carrier	Elapsed time from shipment of serviceable from depot until the asset is delivered to the base.	ALL	H-I	ALL/DLA	TIME
Shop repair time	The time elapsed from receipt of a reparable at the depot repair shop until the item is offered to the DLA distribution function as a serviceable asset. AWP is a subset of this measure. This measure is equal to the standard time plus AWP time.	ALL	D-E	ALC	TIME
Test item cannibalization rate	The number of times cannibalization has taken place on test items. Events will be recorded for each action of cannibalization.	ALL	D165	MAJCOM	Number
Transportation costs	Cost comparison will be made to determine changes in transportation costs for demonstration items resulting from utilization of premium transportation. Express costs and normal distribution costs will be considered in this computation. (SM-ALC DEFINITION)	ALL		DLA	COST
Transaction Communications time	Elapsed time for a requirement transaction to pass system to system, from using activity supply system to depot (DO35).	All	T1-T2	ALC	Time
WSMIS/SAM Problem Items					
Other Depot Repair					
IMS/PMS Metrics					

Annex F - Process Charts

Annex G - AFMC Demonstration Plans

THIS PAGE INTENTIONALLY LEFT BLANK

COMMUNICATIONS - ELECTRONICS
LEAN LOGISTICS DEMONSTRATION

PLAN

14 SEPTEMBER 94

This Plan is intended to transmit instructions for the Lean Logistics Demonstration that will be conducted in the Communications - Electronics community.

TABLE OF CONTENTS

Section	Page
1. Purpose	1
2. Objective	1
3. Definitions	1
4. Responsibilities	3
5. Concept of Operations	5
6. Metrics	
Pipeline Metrics	7
Effectiveness/Performance Metrics	9
Cost Metrics	10
7. Points of Contact (SM-ALC)	11
8. Timeline	11

Table 1 - NSN Listing (Total Pipeline Demonstration)

Table 2 - NSN Listing (Partial Pipeline Demonstration)

Table 3 - Key Personnel Listing

Appendix 1 - IMS & PMS Setup Procedures

Appendix 2 - Checklists

Appendix 3 - DLA Processing

Appendix 4 - Shop Repair Process

Appendix 5 - MAJCOM POCs

Appendix 6 - R2P Process

COMMUNICATIONS - ELECTRONICS
LEAN LOGISTICS DEMONSTRATION
PLAN

1. **Purpose.** This plan establishes actions, goals, and timelines associated with lean logistics implementation for the Communications-Electronics community. Participants include: HQ USAF/LG/SC/XO,HQ AFC4A/SY, HQ AMC/LG/SC, HQ ACC/LG/SC, HQ AFMC/LG/DO/XR/CI, HQ AETC/LG/SC, AFLMA/LG, HQ AFSPC/LG/SC, HQ AFSOC/LG/SC, HQ PACAF/LG/SC, HQ USAFE/RS, HQ AIA/LG/SC, HQ AFRES/LG/SC, ANGRC/LG/SC, HQ AFFSA/XR, AWS/PM, SM-ALC/LH/FM, (appropriate SPDs/SSMs) SM-ALC/LGS, and Defense Logistics Agency (DLA).

2. **Objective.** The primary objective of this effort is to demonstrate the premise of the lean logistics concept for communications-electronics and establish an approach to convert other areas into a lean operations mode by:

a. Involving the customer in determining base and Consolidated Stockage inventory lean levels and mission essential items.

b. Reducing spares levels at each of the bases and throughout the system.

c. Decreasing transit times for repair cycle assets moving to and from depot repair.

d. Streamlining base and depot repair processes.

e. Streamlining depot procurement processes.

f. Improving support to the field.

Note: The current demonstration will be comprised of two concurrent demonstrations in the ATCALS area. The first demonstration will be the Total Pipeline Demonstration which will involve items worked in the Navigational Aid shops. In this demonstration, a selected number of NSNs will be monitored from the time the user's request is received until the reparable is repaired and takes its place in the supply system. This will include tracking the asset throughout the entire pipeline and repair shop process.

The second demonstration in the ATCALS area will be a Partial Pipeline Demonstration which will regionalize selected NSNs for various ATCALS systems. This demonstration will measure asset movement through the pipeline and does not include any internal shop tracking. This portion of the demonstration may expand to additional items/systems as the demonstration progresses.

3. **Definitions.**

a. **Awaiting Part (AWP) Time.** Elapsed time a reparable spends awaiting parts while in the repair cycle.

b. **Base Lean Level.** Quantity authorized for stock by either a base demand level or fixed level. The base level is influenced by the base daily demand rate, base repair cycle time, percent of base repair, and order and ship time (OS&T) from the Consolidated Serviceable Inventory (CSI). These levels may fluctuate based upon use at the bases. Total quantities authorized may be fixed, lower or higher, based upon consumption. (Communication System/Mission Essentially will apply)

c. **Consolidated Inventory Location (CIL)**
Located at the SOR, this storage location for serviceable and reparable assets associated with the partial pipeline demo. The serviceable items in the CSI plus the reparable assets equal the CSI level for the partial pipeline demo.

d. **Consolidated Serviceable Inventory (CSI).** The centralized serviceable asset inventory, stored at the source of repair, that will provide rapid (CONUS - 1 day for processing, CONUS -1 day for transportation, OCONUS - 2 days for transportation) distribution to an organization where a requirement exists to fill a base or depot request.

e. **Consolidated Serviceable Inventory (CSI) Level.** The quantity of serviceable inventory maintained at the source of repair necessary to accommodate all of the user requirements including Foreign Military Sales, depot overhaul, and non -AF users. This level may fluctuate based upon use at the bases. Total quantities authorized may be fixed, lower or higher, based upon consumption.

f. **Express Table.** A file in the Stock Control and Distribution (SC&D) system that identifies items to be issued to maintenance upon receipt in Central Receiving.

g. **Express Transportation**. The express transportation concept (expedites the flow of lean logistics reparables from the base to the repair source and serviceable from the CSI to the user. Features could include express carrier terminals in the dedicated support element, and daily (excluding Sunday) pick-up and delivery by the express carrier. The base reparable evacuation process is streamlined by eliminating transportation management office processing and placing reparables in express transportation channels.
Note: for this demo the express transportation process is R2P.

h. **Ineligible Stock**. Assets above the authorized base lean levels or CSI levels. These assets, for the purpose of the demonstration, will be considered stock not usable either by the bases or the PDM line unless a MICAP situation exists. This stock is considered excess to the demonstration requirement based upon new OS&T and depot repair times. At the depots, the item managers will place the serviceable assets in Ownership Purpose (OP) code "B" and unserviceable in condition code "J." The bases will also be required to identify stock at the base as excess when the total number available exceeds the authorized lean quantity, identify them as suspended stock and placed them in supply condition code "J" for base level and supply condition code " B" for depot.

i. **Lean Logistics** - Total Pipeline Demonstration. The demonstration of the lean logistics premise involves a limited number of systems and assets to be reviewed over a 6-month period. Unlike the Partial Pipeline Demonstration, this demonstration will track assets through the repair process. (See Table 1 for NSN listing)

j. **Lean Logistics** - Partial Pipeline Demonstration. This demonstration will involve consolidated inventory and express transportation from and to the CIL of selected items not in the Total Pipeline Demonstration. (See Table 1 for NSN listing)

k. **Readiness Spares Package (RSP) Level**. A level authorized to sustain planned contingency operations (without resupply) for a specified period of time. RSP levels are those levels passed through the D087H. RSPs are intended for use as base support for units that plan to operate in place during wartime using the remove, repair and replace concept. Mobility RSP packages are air transportable packages of spares and repair parts required to sustain planned war time or contingency operations of a weapon support system for a specified period of time pending resupply.

l. **Order and Ship Time (OS&T).** Represents the expected number of days between initiation of a requisition and receipt of the stock by the user including the backorder time.

m. **Reparable Inventory**. The centralized reparable asset inventory of parts stored at the source of repair.

n. **Reparable Item Movement Control System Code (RIMCS)**. A code that directs the disposition of unserviceable material to repair, storage or disposal.

o. **R2P** Air Force adaptation of the successful business practice "return labeling" pioneered by the mail-order industry. R2P works to move express carrier eligible reparables at high velocity to and from the bases and depots, door to door. Criteria for R2P is predicated on the part's being non-hazardous/classified, weighs 150 lbs or less and has simple packaging/preservation requirements.

4. **Responsibilities.**

a. **SM-ALC Staff is responsible for:**

(1) Identifying and analyzing the lean logistics total pipeline demonstration candidate systems/items and make recommendations to the working group (See Table 1 for selected NSNs).

(2) Computing, recommending and coordinating with the users the total pipeline demonstration item lean levels for each base and the CSI.

(3) Reviewing and controlling asset distribution and direct appropriate actions.

(4) Collecting and analyzing metrics data.

(5) Negotiating delivery times with the users for each item in the demonstration not covered by R2P.

(6) Identifying depot process improvement goals.

(7) Ensuring total pipeline demonstration items are immediately inducted to the repair line based on actual demand.

(8) Ensuring items are repaired within standard shop repair time and delivered to the CSI.

(9) Using express transportation (R2P).

(10) Performing periodic reviews of base and depot lean levels.

(11) Replacing assets required for non-Air Force users to the CSI.

(12) Establishing and operating the Consolidated Serviceable Inventory operation.

(13) Holding disposal action in abeyance for 180 days after demonstration starts on affected NSNs.

b. **MAJCOM/Base Users are responsible for:**

(1) Identifying and analyzing the lean logistics partial pipeline demonstration candidate systems/items and make recommendations to the working group. Listings of NSNs will be distributed as systems/assets are added to demonstration.

(2) Computing, recommending, and coordinating the partial pipeline demonstration item lean levels for each base to SM-ALC.

(3) Collecting and analyzing metric data.

(4) Negotiating delivery times with the users for each demonstration item not covered by R2P.

(5) Monitoring ineligible stock.

(6) Validating fixed lean levels for the total pipeline demonstration.

(7) Adjusting base levels as outlined in demonstration plan.

(8) Rapidly evacuating reparables to the reparable shipping destination using R2P.

(9) Identifying and implementing process improvements at the base level to support the goals of the lean logistics demonstration plan.

(10) Analyzing shortages of demonstration items in Readiness Spares Packages and identify to SM-ALC any impacts, prior to the demonstration plan implementation.

5. **Concept of Operations.**

a. Structure. Policy focal points for lean logistics are HQ USAF/LGM-2, HQ AFMC/LGI (for AFMC agencies), HQ AFC4A/SYY (policy for MAJCOMS), HQ DLA-MMDBA, AWS/PM, and the AFFSA/XP, respectively.

b. Requirements Determination. Under a lean logistics concept, every requisition represents an immediate requirement for fill action, either from the CSI, critical base supply stock, or the source of repair. When bases levy a fill requirement on the CSI, CSI level generally a repair requirement for the depot shop. A shortage in the CSI level generates a repair requirement for the depot shop. Assets returned to serviceable condition will be stored at CSI. or shipped to fill backorders. (Partial Pipeline demo doesn't include immediate induction into repair.).

c. Requisition Processing. Every requisition represents an immediate requirement for distribution of an asset from the CSI to the customer. DRIVE does not contain the C-E items and will not be able to assist in this demonstration. The following procedures will be accomplished to support customers requests.

(1) Bases will place a requisition to the CSI when the serviceable plus due-in from maintenance balance falls below the base lean level or a requirement exists.

(2) The source of supply will provide serviceable assets to satisfy base lean level requirements. Assets will be stored in the CSI.

(3) Assets condemned at the depot will be replaced in the system by withdrawal of ineligible asset. Ineligible stock consists of assets set aside at the start of the demonstration, i.e., excess to system-wide lean levels. Ineligible stock will be used to replace condemned assets or to fill critical shortages upon approval of MAJCOM and notify the SSM/SPD Item Manager after the fact. SM-ALC/LHZR will document each such use of ineligible stock. Note: The unit's commander/staff retains the authority to determine mission criticability and authorize the ineligible stock withdrawal. Units must rely on the established spares levels and the express transportation system to the greatest extent possible to validate the Lean Logistics concepts..

d. Reparable Asset Processing. The reparable pipeline is the lifeline of the system. In order to survive in a lean environment, maintenance, supply, and transportation must give special attention to prompt reparable processing.

(1) Base level maintenance activities will expedite reparables through the shops and base supply. Processes vary by MAJCOMs so refer to your MAJCOMS individual instructions for reparable turn-in and express transportation .

(2) The time standard for base reparable evacuation is 2 days (1 day for processing and 1 day for transportation) for direct NRTS items and 4 days (1 day for processing 2 for AWP/repair and 1 day for transportation) for all other reparables. Bases should give strong consideration for NRTS action on items awaiting parts. A serviceable replacement will normally be 2 days away at the CSI; bases would have to receive AWP parts and fix the end item within 2 days to match the same level of service. Keep in mind that a replacement asset (in support of base lean levels) will not be shipped from the CSI as long as the base owned asset is in AWP status. Holding on to end items in AWP status delays replenishment to the base and causes the base to exceed the Repair Cycle Time standard.

(3) Time standards for depot reparable processing are as follows:

(a) Receipt and flow to repair shop: 1 day

(b) Shop repair time: negotiated/standard by NSN

(c) Repair shop to DLA to express carrier: 1 day

(d) Total depot processing time: (shop repair time + 2 days)

e. Levels. The lean logistics support system consists of two types of levels: base lean levels and CSI levels. The working group is responsible for setting, reviewing, and adjusting levels for lean logistics items. The pipeline standards used in deriving lean levels can be seen in Figure 1.

Direct NRTS Items

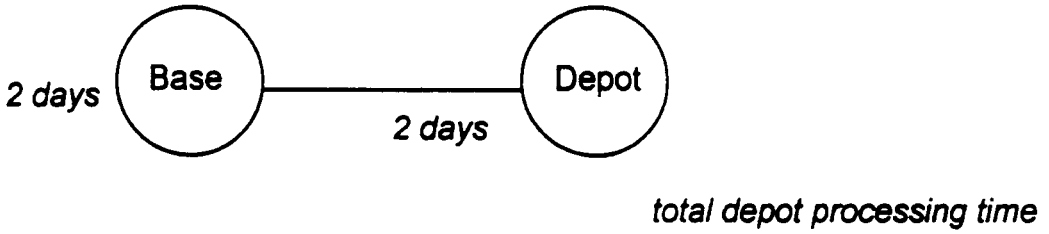

Figure 1

(1) Base lean levels are derived using the daily demand rates, percent of base repair, base repair cycle time, processing time (pipeline from the CSI to the base), a unit cost adjustment factor, a safety level and mission/system essentially.

(2) The CSI lean level is derived by multiplying the system-wide leveling factors with the depot repair time, which will vary by item due to shop repair time variability. The depot repair time represents the reparable pipeline from the base to the depot, the actual repair time, and the serviceable pipeline back to the CSI.

(3) The working group MAJCOM representative will pass base lean levels to each base chief of supply, who will load fixed levels in the SBSS. Any primary operating stock (POS) on-hand above the lean level will be set aside and will be considered ineligible stock. Bases will request use of ineligible stock from their parent MAJCOM to satisfy not mission capable requirements; MAJCOMs will also coordinate this action with SM-ALC/LHZR. This information will be compiled monthly and reported along with other metrics in this plan.

6. **Metrics**. Several metrics will be used to determine progress of the plan and where changes need to be made during the lean logistics demonstration. There are three categories of metrics that will be monitored during the performance of this demonstration plan. They include pipeline metrics (See Figure 3), effectiveness and performance metrics, and cost/savings metrics. Metrics in each of these areas are further defined below.

Pipeline Metrics

a. Depot/Base Awaiting Parts (AWP) Time (Source: EPS OPR:

SM-ALC/LHA-2 -depot, MAJCOMs - Base D23) - Elapsed time a reparable asset spends awaiting (depot - both "F" & "G" condition) parts while in the repair cycle will be put on a flat file. In addition, the incidents of each occurrence will be noted.

b. Base repair time (Source: ATAC OPR: Users/AFC4A) - The repair time is the total time the reparable asset sits in base maintenance; e.g., awaiting parts, in work, etc. In most cases, this time should be less than 2 days because of the required asset release after receipt of a serviceable asset.

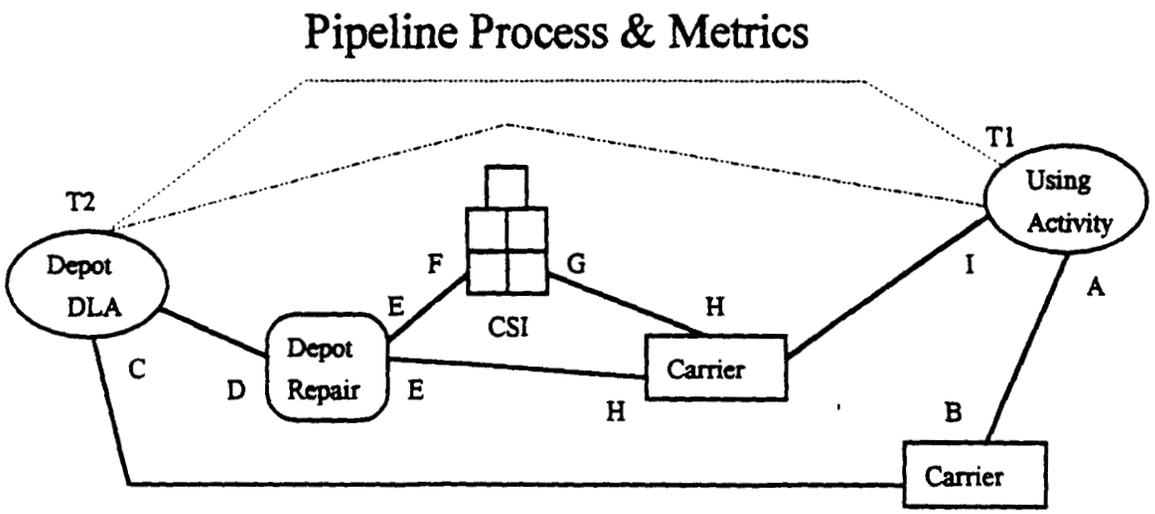

Figure 2

c. Base Shipment Processing Time (Source: ATAC/LMA program OPR: MAJCOM/LG) - Elapsed time from Not Reparable This Station (NRTS) turn-in to supply until shipment processing off base with express carrier. Reference Figure 2 (A=>B)

d. Reparable Transit Time (Source: ATAC/LMA program OPR: SM-ALC/LHA-2) - Reparable transit time is the time it takes for a reparable asset to get from the using activity's base to depot receiving and then from receiving to the repair shop. Reference Figure 2 (B=>C)We show this being deleted. Not sure I'm correct.

e. CSI Shipping Time (Source: LMA program OPR: SM-ALC/LHA-2) - Elapsed time to process item from the CSI warehouse storage to express shipping. Reference Figure 2 (G=>H)

f. Depot Processing & Depacking Time (Source: LMA program OPR: SM-ALC/LHA-2) - The time between depot receipt of the asset until the asset is received in the repair shop. Reference Figure 2 (C=>D)

g. Packing to CSI Time (Source: ATAC OPR: SM-ALC/LHA-2) - Elapsed time from repair shop turn-in of a serviceable asset to DLA until this asset is warehoused in the CSI. Reference Figure 2 (E=>F)

h. Packing to Shipping Time (Source: ATAC OPR: SM-ALC/LHA-2) - Elapsed time from repair shop turn-in of a serviceable asset to DLA for shipment to customer until the asset is actually shipped. Reference Figure 2 (E=>H)

i. Request to Fill Time (Source: LMA Program OPR: SM-ALC/LHA-2) - Elapsed time from receipt of customer requirement at depot until the serviceable asset is received back at the base level supply. (T2=>I)

j. Serviceable Transportation Time (Source: LMA program OPR: SM-ALC/LHA-2) - Elapsed time from shipment of serviceable from CSI until asset is received at base level. Reference Figure 2 (H=>I)

k. Shop Repair Time (Source: LMA program OPR: SM-ALC/LHA-2) - The time elapsed from receipt of a reparable at the depot repair shop until the item is offered to the DLA distribution function as a serviceable asset. This pipeline segment represents actual shop flow time (repair plus processing time). Reference Figure 2 (D=>E)

l. Transaction Communication Time (Source: ATAC OPR: SM-ALC/LHA-2) - Elapsed time for a requirement transaction to pass system to system, from using activity supply system to depot (D035). Reference Figure 2 (T1=>T2)

Effectiveness / Performance Metrics

a. Base Lean Level Issue Effectiveness (Source: R15, OPR: Users) - Issue effectiveness at the base indicates the fill rate based on customer demands issued from the customers' local base supply stock. Issue effectiveness will compare the number of customer demands placed against the base supply and the total issues made from it. The metric will indicate the percentage of time the base can immediately fill a customers requirement.

b. CSI issue effectiveness (Local tracking OPR: SM-ALC/LHA-2) - Issue effectiveness is the ability of the CSI to fill a customer requirement with a serviceable asset once a demand is made. Issue effectiveness will be compares the number of customer demands placed against the CSI with the total issues

made from it. The metric shows indicate the percentage of time the CSI can immediately fill a customers requirement divided by the total number of customer requests.

c. Ineligible withdrawals (local tracking OPR: MAJCOMs OCR: SM-ALC/LHZ) - The number of ineligible withdrawals will be tracked in order to provide lessons learned and adjust CSI levels. and future computations. Each occurrence will be documented by NSN, Qty, SRD, reason why.

d. Inventory Levels - (local tracking OPR: SM-ALC/AFC4A/AFLMA) Track the change in the data elements used to compute the CSI and base lean levels; the number of levels changes and the impact of the on dollars required/saved, quantity reduced/increased and why. Bottom line : What is the minimum number of resources needed and still result in the best system performance.

e. MDR/PQDR incidents (local tracking OPR: SM-ALC/LHAQ-4/LHA-2). - Each NSN in the total pipeline demonstration will be monitored for any MDRs/PQDRs generated against them during the demonstration plan period. History of prior MDRs/PQDRs will be reviewed for potential trends. Their occurrence factors will be noted and considered during CSI computations and lean level readjustments.

f. Negotiated vs. Actual Repairs - Shows D041 computed negotiated requirements vs. what was actually repaired for each stock number.

g. NMCS hours/incidents/cause/delete codes (Source WSMIS) (AFC4A) - Hours of NMCS is the total hours the a piece of equipment was out of commission for supply. Incidents of NMCS is the occurrence factor of out of commission status for a particular piece of equipment. The time begins when a MICAP is generated and ends when the MICAP is satisfied. The cause code and number of occurrences on each asset in NMCS will be tracked and used to analyze impacts on CSI levels. Cause codes are one alpha character in length and are listed in AFM 67-1.

h. RSP fill rate (User/) - The RSP fill rate measures the ability to obtain and maintain required spare assets for Readiness Spares Packages (RSP). The total of on hand stock items divided by the authorized requirement is the RSP fill rate for that system. Note: For the first demo this will not be tracked.

i. RSP issue (User) - The RSP issue is the number of times items have been removed from RSPs. Note: MAJCOMs will track NSN, Qty, SRD, and reason why.

Cost Metrics

a. DLA handling costs - Handling costs associated with Lean Logistics techniques will be computed. Data will be used to project future funding requirements. Number of transactions such as shipments, receipts will be totaled and multiplied against the $29.00 flat rate to determine the costs. In addition, cost information will assist in further analysis to determine the impact on DLA handling costs resulting from expedited processes.

b. Transportation costs - Express transportation costs will be collected so they can be compared to cost avoidance factors brought about by reduced inventories. Express costs and normal distribution costs will be considered in this computation.

Metric measurements will be tracked as of the first of each month and reported to HQ USAF/LGM-2, SM-ALC, HQ AFMC/LGI, and HQ AFC4A on a monthly basis. Up channel reporting will be accomplished on/about the 10th of the month for the preceding months activity. Weekly reporting will take place during the first 30 days of the demonstration effort. Reports will contain analysis and supporting information in a professional format.

7. **Points of contact.** Points of contact can be found in Table 3 of this plan.

8. **Timeline.** The timeline for lean logistics demonstration plan is as follows.

Action	OPR	Date
Determine shop repair times	SM-ALC	22 Jul 94
Identify Financial Impacts	SM-ALC	08 Jul 94
Identify Bits & Pieces of Repair Shop	SM-ALC	22 Jul 94
Develop CSI Process	SM-ALC	08 Jul 94
Develop Item / Program Managers Role	SM-ALC	15 Jul 94
Resolve Shop Issues	SM-ALC	20 Jul 94
Publish final written demonstration plan	SM-ALC/AFC4A	09 Sep 94
Start baseline data collection	AFC4A/SM-ALC	15 Sep 94
Compute revised lean levels	SM-ALC/USERS	09 Sep 94
Validate items and CSI levels	All	15 Sep 94
How goes it meeting	AFC4A	30 Aug 94
Publish final written demonstration plan	AFC4A/SM-ALC	15 Sep 94
Adjust base supply records	Users	30 Sep 94
Collect retail usage data	Users	30 Sep 94

Fill lean levels	SM-ALC	15 Sep 94
Complete baseline data collection	AFC4A/SM-ALC	30 Sep 94
Begin C-E lean logistics demonstration plan	All	01 Oct 94
How Goes It meeting	All	19 Oct 94
Working group meeting/VTC	AFC4A/SM-ALC	XX Jan 95
C-E LL demonstration results to USAF	AFC4A/SM-ALC/AFMC	14 Apr 95

Stock Number	Noun	PCN	System	IM	Hours	Days	CSI Lvl
5820006156050ZK	AMPLMODU	36744A	GRN-9/GRN-20	GHE	22.8	8	2
5820006276641ZK	AMPMOD	23360A	GRN-20	GHE	26.8	8	2
5820007686877ZK	AMPLIFIE	15359A	GRN-9	GHE	29.8	8	2
5820008400175ZK	AM-1701A	65788A	GRN-19	GHE	33.0	8	2
5820010712815	AMPLIFIER	40076A	TRN-41	DHE	15.8	6	
5825000787612	ANTCONTR	83599A	TRN-17	GHE	46	12	2
5825002330928	R1658	24883A	GRN-20	GHE	31.0	9	2
5825003583095	FMO	13532A	JCD (AACY)	GHE	20.7	7	2
5825004777806	MULTIPLI	21940A	TRN-26	GHE	15.2	6	7
5825004777807	SENSOR	21632A	TRN-26	GHE	6.3	4	
5825004839706	OSCILLAT	40071A	TRN-26	GHE	17	7	2
5825004839709	RECEIVER	40072A	TRN-26	GHE	17.5	7	3
5825004929793	RECVR	13533A	GRN-20	GHE	25.8	8	5
5825004929795	RECVR	13534A	GRN-20	GHE	25.8	8	2
5825004929803	CODER	13536A	GRN-20	GHE	32.4	10	2
5825004929804	CODER	13537A	GRN-20	GHE	33.0	10	4
5825004929806	CONDPLXR	13539A	GRN-20	GHE	67.0	17	1
5825004929811	C8422GRN	15948A	GRN-20	GHE	68.7	17	2
5825004929812	C8419	23734A	GRN-19	GHE	29.7	9	2
5825004929814	CODER	13544A	GRA-111	GHE	39.9	11	2
5825004929815	CODER	13545A	GRN-19	GHE	40.8	11	3
5825004981472ZK	RCVRTRAN	37342A	TRN-26	GHE	206.9	42	7
5825004981475ZK	CONTROL	26040A	TRN-26	GHE	97.8	23	2
5825004981477ZK	SUPPORT	27026A	TRN-26	GHE	127	26	2
5825005192202ZK	MONITOR	67596A	TRN-31	GHE	105.2	24	2
5825005533925	CV-460	65377A	TRN-31	GHE	12.6	6	2
5825006156084	URN-3	77320A	TRN-31	GHE	15.8	6	3
5825006276639	CONTDUPL	37322A	GRN-9	GHE	60.8	15	1
5825006276643	CV-650	68949A	GRN-9	GHE	21.7	7	5
5825006427173ZK	KEYER	38996A	404L - URN-5	GHE	6.7	4	2

5825006582792	MULTIPLI	65180A	GRN-20	GHE	19.8	7	2
5825006704675	CODER	79411A	GRN-9	GHE	4.5	4	2
5825007133600	CODENIND	13536A	GRN-9	GHE	10	5	1
5825007133602	CV-673	68209A	GRN-9/GRN-20	GHE	19.8	7	2
5825007615373ZK	RECVR	13551A	GRN-19/GRN-31	GHE	29.8	9	5
5825008400176ZK	DUPLEXER	65790A	GRN-19	GHE	76.5	17	3
5825010124838ZK	SPECFLTR	29091A	GRN-9/TRN-31	GHE	23.8	8	2
5825010321238	AMPLIFIER	24529A	TRN-26	GHE	45.0	12	4
5825010701448ZK	RECEIVER	39551A	TRN-41	GHE	27.7	9	1
5825010701470ZK	CKTCD	39554A	TRN-41	GHE	15.2	6	2
5825010702309ZK	ANTENNA	40259A	TRN-41	GHE	24.5	8	2
5825010731182ZK	REC/TRAN	38485A	TRN-41	GHE	187.7	39	2
5825012166063ZK	FCPU	26117A	FRN-43	GHC		1	2
Stock Number	Noun	PCN	System	IM	Hours	Days	CSI Lvl
5895003585076ZK	AMPIF	13530A	GRN-19/TRN-31	GHE	11.9	5	1
5895003585079ZK	AMPLIFIER	13531A	GRN-19	GHE	11.9	5	2
5895004203056ZK	AMPLIFIR	66849A	GRN-9/GRN-20	GHE	11.9	5	2
5895004502524ZK	AMP	78041A	GRA-120	GHE	40.0	11	2
5895004839714ZK	MULTIPLR	28457A	TRN-26	GHE	15.2	6	4
5895004962183ZK	CONTROLS	16363A	TRN-31	GHE	13.3	6	2
5895004981547ZK	ID1661	24377A	TRN-26	GHE	80.2	19	3
5895005528624ZK	AMPLIFIE	77200A	GRN-20	GHE	15.8	6	2
5895006155997ZU	MIXERSTA	16271A	GRN-9/GRN-20	GHE	13.3	6	2
5895006156085ZK	RECEIVER	77551A	GRN-19	GHE	15.8	6	3
5895006175779ZK	MULCHSIS	77756A	GRN-20	GHE	10.0	4	2
5895006175789ZK	RECEIVER	78704A	GRN-20	GHE	15.3	6	2
5895006279705ZK	CAVITY	40069A	GRN-9	GHE	15.5	6	2
5895007615370ZK	AMPMIX	13550A	TRN-31	GHE	11.9	5	2
5895007692767ZK	AMPLIFR	11540A	GRN-9	GHE	11.2	5	2
5895008089919ZK	CAVITYRF	65883A	GRN-9/GRN-20	GHE	10.0	5	2
5895008126181ZK	CAVITY	65388A	GRN-9/19/20	GHE	10.0	4	2

5895008812822ZK	AMPLIFIR	12044A	AACY (JCD)	GHE	21.2	7	
5895011827351ZJ	SIDEBAND	56388A	FRN-43	GHC	40.0	11	3
5895011829834ZK	SIDEBAND	83595A	FRN-43	GHC	20.0	7	2
5895011830426ZK	AMP	42109A	FRN-43	GHC	20.0	7	2
5895012039144ZK	PWR SUP	79558A	FRN-43	GHC	40.0	11	4
5895012098859ZK	RMT CTL	27408A	FRN-43	GHC	50.0	13	2
5915005899709ZK	FILTER	40197A	GRN-20 (SICA)	GH5	35.0	10	
5915012811978ZK	EMI FLTR	55045A	FRN-43	GHC	30.0	9	2
5955004777872ZK	5/9A35	24027A	TRN-26	GHE	6.0	4	3
5975004929820ZK	CABINET	37324A	GRN-19	GHE	127.6	28	2
5985001373931ZK	GRA121A	36958A	GRA-121	GHE	78.8	20	3
5985001373932ZK	ANTENNAA	22006A	GRA-121	GHE	78.8	20	
5985001565575ZK	ANTENNA	21284A	GRA-120	GHE	84.0	22	4
5985001595694ZK	ANTENNA	36452A	GRA-120	GHE	76.2	21	
5985001595697	MONITORA	23191A	GRA-121	GHE	48.7	15	3
5985001771668	ANTCNTRL	38174A	GRA-120/121	GHE	67.9	17	2
5985002536676ZK	ANTCON	26017A	TRN-26	GHE	94.0	22	2
5985004661015	MONITORA	29179A	GRA-120	GHE	51.1	16	3
5998004517002ZK	2A1A1	24528A	TRN-26	GHE	20.3	7	2
5998004777882	CKT CD A	41018A	TRN-26	GHE	12.0	6	3
5998004779085ZK	CCA	27392A	GRA-120	GHE	10.0	4	3
5998004839762ZK	CKT CRD	84349A	TRN-26	GHE	10.0	5	3
5998004866326ZK	CKT CD A	41417A	TRN-26	GHE	8.0	5	2
5998010701463ZK	CIR CD A	40170A	TRN-41	GHE	16.0	6	2
5998010701464ZK	CIR CD A	40172A	TRN-41	GHE	8.0	5	1
5998010701468ZK	CIR CARD	39552A	TRN-41	GHE	7.6	5	2
Stock Number	Noun	PCN	System	IM	Hours	Days	
5998010809754ZK	SYNTHEZR	40171A	TRN-41	GHE	24.0	8	2
5998011465507ZK	ENCODER	41418A	TRN-26	GHE	24.0	8	3
5998011781103ZK	PWR SUP	47255A	FRN-43	GHC	15.0	6	2
5998011827316ZK	AUDIO PR	30269A	FRN-43	GHC	12.0	3	3

5998011890327ZK	MODULATR	66115A	FRN-43	GHC	20.0	7	2
6110000015365ZK	REGULTOR	39395A	TRN-17	GHE	15.2	6	2
6110004854166	REGULATR	32170A	TRN-26	GHE	20.5	8	2
6130000526714ZK	PWRSPLY	23372A	TRN-31	GHE	21.5	7	2
6130000526715ZK	PP-956	67155A	GRN-19	GHE	30.0	9	3
6130003515731ZK	PWRSPLY	26016A	GRN-20	GHE	27.5	8	2
6130004481091	CIR CD A	40073A	TRN-26	GHE	11.5	5	
6130004660699ZK	PWRSUPLY	36202A	TRN-26	GHE	32.6	9	2
6130004839766ZK	5-9PS1	24610A	TRN-26	GHE	19.5	7	2
6130004929805ZK	POWRSPLY	29839A	GRN-20	GHE	19.5	7	2
6130004929810ZK	PP6406	23733A	GRN-19	GHE	20.5	7	2
6130006276644ZK	PWRSUP	23206A	GRN-20	GHE	20.5	7	3
6130006276647ZK	POWRSPLY	36743A	GRN-19/GRN-20	GHE	20.3	7	3
6130007265889ZK	POWRSPLY	29843A	GRN-19/GRN-20	GHE	11.4	5	2
6130007265890ZK	POWERSUP	28795A	GRN-9 (SICA)	GH5	19.8	7	2
6130010812360ZK	PWR SUPP	39553A	TRN-41	GHE	16.7	6	1
6130011556468ZK	3/8PS1	24029A	TRN-26	GHE	35.3	10	4
6625004991872ZK	OSSCOPE	39396A	TRN-26	GHE	62.9	16	
The standard shop repair times will constitute the baseline by which to							
measure shop process improvements in the Lean Logistics demonstration.							

	PARTIAL PIPELINE DEMONSTRATION NSN(S)		
Stock Number	System.	CSI Level	
3010-00-164-1843ZK	GPN-12		
3010-00-483-5205ZK	GPN-12		
4140-00-099-9197ZK	GPN-12	2	
4140-00-144-7634ZK	GPN-12		NSN NOT LOADED IN D043A
5820-00-826-7835ZK	GPN-12		
5820-00-826-7842ZK	GPN-12	3	
5830-00-109-2503ZK	GPN-12	1	
5840-00-182-7223ZK	GPN-12		
5840-00-480-5348ZK	GPN-12	3	
5840-00-480-5350	GPN-12	3	
5840-00-480-5372ZK	GPN-12	6	RIMCS - NO SHIP TO ADDRESS LOADED
5840-00-902-0003ZK	GPN-12	2	
5840-01-046-8687	GPN-12		
5840-01-111-6205ZK	GPN-12	1	RIMCS - NO SHIP TO ADDRESS LOADED
5840-01-126-0250	GPN-12		
5840-01-178-0394ZK	GPN-12		
5840-01-178-0509	GPN-12		
5840NC918534F	GPN-12		
5840NC918535F	GPN-12		
5895-00-001-2734ZK	GPN-12	2	
5895-00-001-2735ZK	GPN-12		
5895-00-001-2738ZK	GPN-12		

5895-00-001-2744ZK	GPN-12	2	
5895-00-001-2745ZK	GPN-12		RIMCS - NO SHIP TO ADDRESS LOADED
5895-00-001-2747ZK	GPN-12	2	RIMCS - NO SHIP TO ADDRESS LOADED
5895-00-001-2748ZK	GPN-12	2	
5895-00-001-2749ZK	GPN-12	2	
5895-00-001-2752ZK	GPN-12		
5895-00-001-2761ZK	GPN-12	2	
5895-00-001-2763ZK	GPN-12	3	RIMCS - NO SHIP TO ADDRESS LOADED
5895-00-001-2766ZK	GPN-12		
5895-00-173-4099ZK	GPN-12		RIMCS - NO SHIP TO ADDRESS LOADED
5895-00-182-7221ZK	GPN-12	2	
5895-00-182-7228ZK	GPN-12	1	
5895-00-182-7232ZK	GPN-12		
5895-00-185-8236ZK	GPN-12		RIMCS - NO SHIP TO ADDRESS LOADED
5895-00-195-6090ZK	GPN-12	2	
5895-00-237-3340ZK	GPN-12	5	
5895-00-249-9700ZK	GPN-12		AF NOT AUTH USER/NO D043A/IM DATA
5895-00-480-5346ZK	GPN-12	4	RIMCS - NO SHIP TO ADDRESS LOADED
5895-00-480-5351ZK	GPN-12	2	
5895-00-480-5369ZK	GPN-12	4	
5895-00-480-5370ZK	GPN-12		
5895-00-480-5371ZK	GPN-12		RIMCS - NO SHIP TO ADDRESS LOADED
5895-00-605-6260ZK	GPN-12	1	
5895-00-605-6278ZK	GPN-12	5	
5895-01-188-0199ZK	GPN-12		

5895-01-320-5454ZK	GPN-12	5	
5895-01-372-3926ZK	GPN-12	3	NO RIMCS DATA LOADED
5915-01-111-4018ZK	GPN-12	3	
5950-00-027-6905ZK	GPN-12	2	
5955-01-318-1785ZK	GPN-12	5	
5980-00-232-4916ZK	GPN-12	2	
5985-00-001-2594ZK	GPN-12	2	
5985-00-049-9158ZK	GPN-12	2	
5985-00-088-4484ZK	GPN-12		
5985-00-127-5937ZK	GPN-12	1	
5985-00-169-8957ZK	GPN-12	2	
5985-00-170-4156ZK	GPN-12		
5985-00-172-0583ZK	GPN-12	2	
5985-00-238-1951ZK	GPN-12	1	
5985-00-465-1143ZK	GPN-12		
5985-00-491-9463ZK	GPN-12		
5985-00-532-3683ZK	GPN-12		
5985-01-039-0469ZK	GPN-12		
5985-01-096-6316ZK	GPN-12		
5985-01-111-1005ZK	GPN-12		
5985-01-205-2685ZK	GPN-12		
5985-01-321-5084ZK	GPN-12	2	NO RIMCS DATA LOADED
5988-00-001-5624ZK	GPN-12	1	
5988-00-465-5439ZK	GPN-12	4	
5990-00-169-8922ZK	GPN-12		

5995-01-318-5613ZK	GPN-12	5	
5998-00-001-2708ZK	GPN-12		
5998-00-001-2710ZK	GPN-12	5	
5998-00-001-2711ZK	GPN-12	5	
5998-00-001-2713ZK	GPN-12	4	
5998-00-001-2714ZK	GPN-12	5	
5998-00-001-2715ZK	GPN-12		
5998-00-001-2716ZK	GPN-12	5	
5998-00-001-2717ZK	GPN-12	5	
5998-00-001-2718ZK	GPN-12	4	
5998-00-001-2719ZK	GPN-12		
5998-00-001-2720ZK	GPN-12	4	
5998-00-001-2721ZK	GPN-12	4	
5998-00-001-2724ZK	GPN-12		
5998-00-001-2725ZK	GPN-12	3	
5998-00-001-2726ZK	GPN-12	6	
5998-00-001-2727ZK	GPN-12	4	
5998-00-001-2728ZK	GPN-12	6	
5998-00-001-2729ZK	GPN-12	4	
5998-00-001-2751ZK	GPN-12	4	
5998-00-001-2765ZK	GPN-12	3	RIMCS - NO SHIP TO ADDRESS LOADED
5998-00-001-2767ZK	GPN-12	2	
5998-00-001-2780ZK	GPN-12		
5998-00-001-5622ZK	GPN-12	2	
5998-00-001-7133ZK	GPN-12		

5998-00-001-7136ZK	GPN-12		
5998-00-023-3844ZK	GPN-12	4	
5998-00-026-8714ZK	GPN-12		
5998-00-026-8726ZK	GPN-12	2	
5998-00-192-2402ZK	GPN-12		
5998-00-223-2224ZK	GPN-12	2	
5998-00-465-5166ZK	GPN-12	6	
5998-00-465-5320ZK	GPN-12	5	
5998-00-465-5322ZK	GPN-12		
5998-00-465-5490ZK	GPN-12	3	
5998-00-465-5548ZK	GPN-12	3	
5998-00-465-5572ZK	GPN-12		
5998-00-465-5584ZK	GPN-12	4	
5998-00-465-5646ZK	GPN-12	4	SOS IS FFZ, HOWEVER,IM/SSM MONITOR IS FLZ
5998-00-465-5647ZK	GPN-12	3	
5998-00-465-5652ZK	GPN-12	4	
5998-00-465-5806ZK	GPN-12	5	
5998-00-465-5849ZK	GPN-12	4	
5998-00-480-5368ZK	GPN-12		
5998-00-501-8598ZK	GPN-12		
5998-00-658-2670ZK	GPN-12	4	
5998-00-782-4677ZK	GPN-12	2	
5999-00-001-2712ZK	GPN-12	5	
5999-00-001-2723ZK	GPN-12	4	
5999-00-001-2730ZK	GPN-12	4	

5999-00-001-2731ZK	GPN-12	2	
5999-00-001-2732ZK	GPN-12	5	
5999-00-001-2733ZK	GPN-12		
5999-00-001-2736ZK	GPN-12	4	
5999-00-001-2737ZK	GPN-12	4	
5999-00-001-2739ZK	GPN-12	4	
5999-00-001-2740ZK	GPN-12		
5999-00-001-2741ZK	GPN-12		
5999-00-001-2742ZK	GPN-12	4	
5999-00-001-2750ZK	GPN-12	4	
5999-00-001-2762ZK	GPN-12	4	
5999-00-001-2764ZK	GPN-12		
5999-00-001-2774ZK	GPN-12		
5999-00-001-2775ZK	GPN-12		
5999-00-001-2779ZK	GPN-12		
5999-00-001-5621ZK	GPN-12	4	
5999-00-001-5625ZK	GPN-12		
5999-00-001-7127ZK	GPN-12		
5999-00-001-7128ZK	GPN-12		
5999-00-001-7131ZK	GPN-12	2	
5999-00-001-7134ZK	GPN-12	1	
5999-00-023-6105ZK	GPN-12	8	
6105-00-169-8508ZK	GPN-12	2	
6110-00-172-4340ZK	GPN-12	3	
6130-00-001-2709ZK	GPN-12	3	

6130-00-001-2778ZK	GPN-12		
6130-00-001-7135ZK	GPN-12		RIMCS - NO SHIP TO ADDRESS LOADED
6130-00-173-9705ZK	GPN-12		
6130-00-182-7323ZK	GPN-12		RIMCS - NO SHIP TO ADDRESS LOADED
6130-00-465-5366ZK	GPN-12	4	
6130-00-465-5583ZK	GPN-12	4	
6130-00-480-4262ZK	GPN-12		
6130-00-481-1669ZK	GPN-12	2	
6130-00-481-1670ZK	GPN-12		
6130-00-481-1671ZK	GPN-12		
6130-00-481-1672ZK	GPN-12		
6130-00-826-7808ZX	GPN-12	3	
6625-00-001-6090	GPN-12		SOS IS FPZ, SHIP TO ADDRESS IS FB2059
6625-00-238-1297ZK	GPN-12	1	
7050-00-008-8236ZK	GPN-12		

	PARTIAL PIPELINE DEMONSTRATION NSNS		
Stock Number	System	CSI Level	
3010-01-052-6150ZK	GPN-20		
3010-01-055-6226ZK	GPN-20	2	
3010-01-312-9349ZK	GPN-20		
3010-01-500-5199ZW	GPN-20		
5340-01-055-6529ZK	GPN-20	2	
5340-01-128-7125ZW	GPN-20	2	
5805-01-052-2048	GPN-20	7	
5805-01-052-2051	GPN-20	8	
5805-01-052-2107	GPN-20	12	
5805-01-052-2109	GPN-20	8	
5805-01-052-2110	GPN-20	6	
5805-01-052-2113	GPN-20	7	
5805-01-052-2114	GPN-20	10	
5805-01-053-3697ZS	GPN-20	2	RIMCS - NO SHIP TO ADDRESS LOADED
5805-01-053-3704	GPN-20	2	RIMCS - NO SHIP TO ADDRESS LOADED
5805-01-053-3748	GPN-20		
5805-01-054-3930	GPN-20	2	RIMCS - NO SHIP TO ADDRESS LOADED
5805-01-054-4980	GPN-20	11	
5805-01-055-8574	GPN-20	1	RIMCS - NO SHIP TO ADDRESS LOADED
5805-01-055-9649	GPN-20	2	RIMCS - NO SHIP TO ADDRESS LOADED
5805-01-055-9650	GPN-20	2	RIMCS - NO SHIP TO ADDRESS LOADED
5805-01-056-9152	GPN-20	2	

5805-01-057-5325	GPN-20	4	RIMCS - NO SHIP TO ADDRESS LOADED
5805-01-058-2945	GPN-20		RIMCS - NO SHIP TO ADDRESS LOADED
5805-01-067-9965	GPN-20	2	
5805-01-068-4040	GPN-20		RIMCS - NO SHIP TO ADDRESS LOADED
5805-01-071-1137	GPN-20		RIMCS - NO SHIP TO ADDRESS LOADED
5805-01-104-8628	GPN-20	3	
5820-00-174-5058	GPN-20	2	
5820-00-190-2249	GPN-20		
5820-00-257-8053	GPN-20		
5820-00-260-0411	GPN-20		
5820-00-418-4571	GPN-20	2	
5820-00-420-8417	GPN-20	2	
5820-00-420-8418	GPN-20		
5820-00-420-8419	GPN-20		
5820-00-420-8422	GPN-20		AF NOT AUTH USER/ SOS IS N35 (NAVY)
5820-00-420-8423	GPN-20	3	
5820-00-470-4089	GPN-20		
5820-00-491-2872	GPN-20		
5840-00-268-8421	GPN-20	4	
5840-00-287-8012	GPN-20	2	
5840-00-293-9876	GPN-20	2	
5840-01-043-4634	GPN-20		RIMCS - NO SHIP TO ADDRESS LOADED
5840-01-043-4635	GPN-20	7	
5840-01-044-6241	GPN-20		
5840-01-044-7761	GPN-20	9	

5840-01-044-7762ZK	GPN-20		
5840-01-044-7887	GPN-20	11	
5840-01-044-7888	GPN-20	10	
5840-01-045-0972	GPN-20	4	
5840-01-046-8687	GPN-20		
5840-01-050-2416	GPN-20	2	
5840-01-050-3487	GPN-20	2	
5840-01-050-4604	GPN-20	1	RIMCS - NO SHIP TO ADDRESS LOADED
5840-01-050-4727	GPN-20		
5840-01-050-7745	GPN-20	3	
5840-01-050-9419	GPN-20		
5840-01-051-6472	GPN-20	2	
5840-01-051-6995	GPN-20	2	RIMCS - NO SHIP TO ADDRESS LOADED
5840-01-051-7519	GPN-20	4	
5840-01-052-2799	GPN-20		
5840-01-052-2869	GPN-20	2	
5840-01-052-2934	GPN-20	10	RIMCS - NO SHIP TO ADDRESS LOADED
5840-01-052-3809	GPN-20	2	
5840-01-052-3814	GPN-20	6	
5840-01-052-3879	GPN-20		
5840-01-052-4861	GPN-20		
5840-01-052-4862	GPN-20	5	RIMCS - NO SHIP TO ADDRESS LOADED
5840-01-052-4877	GPN-20	1	RIMCS - NO SHIP TO ADDRESS LOADED
5840-01-052-6110	GPN-20		
5840-01-053-2966	GPN-20	2	

5840-01-053-3213	GPN-20	7	
5840-01-053-3373	GPN-20	2	
5840-01-053-8616	GPN-20	3	
5840-01-053-9245	GPN-20		
5840-01-053-9246	GPN-20		
5840-01-054-6110	GPN-20	7	
5840-01-054-8615	GPN-20	2	
5840-01-054-8788ZK	GPN-20		
5840-01-054-8789ZK	GPN-20	3	
5840-01-055-4867	GPN-20	2	
5840-01-085-2056	GPN-20		
5840-01-091-0524	GPN-20	5	
5840-01-091-0525	GPN-20	2	
5840-01-091-8705	GPN-20	2	
5840-01-096-8447	GPN-20	1	
5840-01-100-9254	GPN-20	2	
5840-01-111-6205ZK	GPN-20		RIMCS - NO SHIP TO ADDRESS LOADED
5840-01-124-4144	GPN-20	5	
5840-01-125-9462	GPN-20		
5840-01-126-0250	GPN-20		
5840-01-128-7322	GPN-20		
5840-01-128-7323	GPN-20		
5840-01-128-7324	GPN-20	2	
5840-01-135-3195	GPN-20		AF NOT AUTH USER, NO D043A/IM DATA
5840-01-141-3104	GPN-20	2	

5840-01-145-2779ZK	GPN-20	9	SHIP TO ADDRESS IS N4643/N68620 (NAVY)
5840-01-161-0626ZK	GPN-20		AF NOT AUTH USER, NO D043A/IM DATA
5840-01-173-6009ZK	GPN-20		NO RIMCS DATA LOADED
5840-01-190-4984ZK	GPN-20	2	
5840-01-341-1998ZK	GPN-20		
5840-01-358-4234ZK	GPN-20	2	
5895-00-072-7984ZK	GPN-20		
5895-00-146-7979ZK	GPN-20	5	
5895-00-146-7998ZK	GPN-20		
5895-00-147-0040ZK	GPN-20	4	
5895-00-147-0042ZK	GPN-20		
5895-00-150-8707ZK	GPN-20		
5895-00-150-8716ZK	GPN-20		
5895-00-156-5967ZK	GPN-20		
5895-00-186-6186ZK	GPN-20		
5895-00-249-9700ZK	GPN-20		AF NOT AUTH USER, NO D043A/IM DATA
5895-00-260-0924ZX	GPN-20		
5895-00-374-7537ZK	GPN-20		
5895-00-420-6676ZX	GPN-20		
5895-00-465-8261ZW	GPN-20	4	
5895-00-483-6080ZW	GPN-20		
5895-00-487-1373ZK	GPN-20		
5895-00-495-3687ZK	GPN-20		
5895-00-500-8383ZK	GPN-20		
5895-00-500-8386ZK	GPN-20		
5895-00-509-2359ZK	GPN-20		

5895-00-528-7812ZK	GPN-20		
5895-00-764-1058ZK	GPN-20	1	
5895-01-051-0130ZW	GPN-20	2	
5895-01-052-3827ZW	GPN-20	8	
5895-01-053-3747ZS	GPN-20	2	RIMCS - NO SHIP TO ADDRESS LOADED
5895-01-054-1437ZS	GPN-20		
5895-01-069-6489ZK	GPN-20		
5895-01-070-4891ZK	GPN-20	2	
5895-01-070-5052ZK	GPN-20	2	
5895-01-070-5053ZK	GPN-20		
5895-01-117-0349ZK	GPN-20	1	
5895-01-188-0199ZK	GPN-20		
5895-01-324-1890ZK	GPN-20		
5915-01-048-0587ZD	GPN-20	2	
5915-01-048-0662ZK	GPN-20	1	
5915-01-111-4018ZK	GPN-20		
5920-01-054-5315ZK	GPN-20	2	
5925-01-228-6963ZK	GPN-20	2	
5940-01-057-4988ZK	GPN-20	2	
5955-01-052-3505ZW	GPN-20	2	
5955-01-090-1858ZW	GPN-20	5	
5960-01-055-6526ZW	GPN-20	2	
5960-01-284-1642ZK	GPN-20		
5975-01-160-2880	GPN-20		
5975-01-164-5832	GPN-20	1	

5985-00-411-3565ZK	GPN-20		
5985-01-050-5080ZW	GPN-20	2	
5985-01-050-6702ZW	GPN-20	2	
5985-01-050-6703ZW	GPN-20	2	
5985-01-050-9518ZW	GPN-20		
5985-01-051-0129ZW	GPN-20	2	
5895-01-051-0130ZW	GPN-20		
5985-01-051-0131ZW	GPN-20	2	
5985-01-051-0132ZW	GPN-20	2	
5985-01-051-0133ZW	GPN-20	2	
5985-01-051-6083ZW	GPN-20	2	
5985-01-051-6084ZW	GPN-20	2	
5985-01-051-6085ZW	GPN-20	2	
5985-01-051-6996ZW	GPN-20		
5985-01-052-2469ZW	GPN-20	2	
5985-01-052-2515	GPN-20	3	
5985-01-052-3810ZW	GPN-20	2	
5985-01-052-3811ZW	GPN-20	2	
5985-01-052-3812ZW	GPN-20	2	
5985-01-052-4497ZW	GPN-20	2	
5985-01-052-5959ZW	GPN-20		
5985-01-052-6228ZW	GPN-20		
5985-01-052-9319ZW	GPN-20		
5985-01-052-9320ZW	GPN-20	2	
5985-01-053-5106ZW	GPN-20	2	

5985-01-053-5913ZW	GPN-20		
5985-01-053-6552ZW	GPN-20	2	
5985-01-053-7808ZK	GPN-20	3	
5985-01-054-5314ZX	GPN-20	2	
5985-01-054-9801ZW	GPN-20		
5985-01-055-4664ZK	GPN-20	2	
5985-01-055-5180ZW	GPN-20	2	
5985-01-060-6031ZW	GPN-20	2	
5985-01-063-7186ZW	GPN-20	1	
5985-01-065-1669ZW	GPN-20	1	
5985-01-065-1670ZW	GPN-20		
5985-01-065-1671ZW	GPN-20	1	
5985-01-065-1672ZW	GPN-20		
5985-01-065-1673ZW	GPN-20		
5985-01-065-1674ZW	GPN-20		
5985-01-065-1675ZW	GPN-20	2	
5985-01-065-6716ZW	GPN-20	2	
5985-01-065-7888ZW	GPN-20	2	
5985-01-067-2085ZW	GPN-20		
5985-01-067-2086ZW	GPN-20	1	
5985-01-067-2087ZW	GPN-20	2	
5985-01-067-2088ZW	GPN-20		
5985-01-067-2089ZW	GPN-20	2	
5985-01-096-4282ZW	GPN-20		
5985-01-096-4283ZW	GPN-20	1	

5985-01-096-4284ZW	GPN-20	1	
5985-01-096-4960ZW	GPN-20		
5985-01-096-4961ZW	GPN-20	1	
5985-01-096-4962ZW	GPN-20	2	
5985-01-096-4963ZW	GPN-20	1	
5985-01-096-4964ZW	GPN-20	1	
5985-01-096-4965ZW	GPN-20	1	
5985-01-096-4966ZW	GPN-20		
5985-01-096-4967ZW	GPN-20		
5985-01-096-4968ZW	GPN-20		
5985-01-096-4969ZW	GPN-20		
5985-01-096-4970ZW	GPN-20		
5985-01-096-4971ZW	GPN-20		
5985-01-096-4972ZW	GPN-20	1	
5985-01-096-4973ZW	GPN-20	1	
5985-01-096-4974ZW	GPN-20		
5985-01-096-4975ZW	GPN-20	1	
5985-01-096-4976ZW	GPN-20		
5985-01-096-4977ZW	GPN-20		
5985-01-096-4978ZW	GPN-20	1	
5985-01-096-4979ZW	GPN-20		
5985-01-096-4980ZW	GPN-20	1	
5985-01-096-4981ZW	GPN-20	2	
5985-01-096-4982ZW	GPN-20	1	
5985-01-096-4983ZW	GPN-20	2	

5985-01-096-4984ZW	GPN-20	1	
5985-01-096-4985ZW	GPN-20	1	
5985-01-096-4986ZW	GPN-20		
5985-01-096-4987ZW	GPN-20	1	
5985-01-096-4988ZW	GPN-20		
5985-01-096-4989ZW	GPN-20		
5985-01-096-4990ZW	GPN-20		
5985-01-096-4991ZW	GPN-20		
5985-01-096-4992ZW	GPN-20	1	
5985-01-099-9613ZK	GPN-20	1	NO RIMCS DATA LOADED
5985-01-104-1783ZW	GPN-20		
5985-01-104-1784ZW	GPN-20	1	
5985-01-104-1785ZW	GPN-20	1	
5985-01-104-1786ZW	GPN-20	1	
5985-01-104-1787ZW	GPN-20		
5985-01-111-1005ZK	GPN-20		
5985-01-111-2207ZW	GPN-20	2	
5985-01-124-4131	GPN-20		RIMCS - NO SHIP TO ADDRESS LOADED
5985-01-154-8922ZW	GPN-20		
5985-01-160-9109ZK	GPN-20		
5985-01-160-9110ZK	GPN-20		
5985-01-160-9111ZK	GPN-20	2	
5985-01-182-9661	GPN-20		
5985-01-182-9662	GPN-20	2	
5985-01-185-0968ZK	GPN-20		

5985-01-205-2685ZK	GPN-20		
5985-01-216-2920ZK	GPN-20		
5985-01-218-5260ZW	GPN-20		
5985-01-218-5261ZW	GPN-20		
5985-01-218-5262ZW	GPN-20		
5985-01-218-5263ZW	GPN-20		
5985-01-228-7407ZK	GPN-20	2	
5990-00-452-0272ZK	GPN-20		
5998-00-004-5523	GPN-20		
5998-00-005-2167ZK	GPN-20		
5998-00-005-2168ZK	GPN-20		
5998-00-036-8510ZK	GPN-20		
5998-00-146-7992ZK	GPN-20		
5998-00-146-7994ZK	GPN-20		
5998-00-147-4072ZK	GPN-20		
5998-00-147-4118ZK	GPN-20		
5998-00-150-8715ZK	GPN-20		
5998-00-153-3849ZK	GPN-20		
5998-00-156-5961ZK	GPN-20	3	
5998-00-156-5964ZK	GPN-20		
5998-00-186-2478ZK	GPN-20		
5998-00-186-2482ZK	GPN-20		
5998-00-186-6012ZK	GPN-20	2	
5998-00-186-6107ZK	GPN-20		
5998-00-186-6157ZK	GPN-20		

5998-00-256-4177ZK	GPN-20	17	
5998-00-256-4301ZK	GPN-20	12	
5998-00-317-7086ZK	GPN-20		
5998-00-400-0042ZK	GPN-20		
5998-00-404-9593ZK	GPN-20		
5998-00-404-9601ZK	GPN-20		
5998-00-410-7329ZK	GPN-20		
5998-00-415-2137ZK	GPN-20		
5998-00-424-6750ZK	GPN-20		
5998-00-471-4464ZK	GPN-20		
5998-00-471-4469ZK	GPN-20		
5998-00-471-9823ZK	GPN-20		
5998-00-478-7112ZK	GPN-20		
5998-00-483-5687ZW	GPN-20		
5998-00-483-5847ZW	GPN-20		
5998-00-483-5886ZW	GPN-20		
5998-00-483-5887ZW	GPN-20		
5998-00-483-6008ZW	GPN-20		
5998-00-483-6037ZW	GPN-20		
5998-00-483-6110ZW	GPN-20		
5998-00-483-6149ZW	GPN-20		
5998-00-483-6227ZW	GPN-20	2	
5998-00-483-6425ZW	GPN-20	2	
5998-00-501-8598ZK	GPN-20		
5998-00-557-1588ZW	GPN-20		

5998-00-570-4363ZK	GPN-20	1	
5998-00480-6729ZK	GPN-20		
5998-01-022-6772	GPN-20	1	
5998-01-032-1448ZW	GPN-20	8	
5998-01-032-1449ZW	GPN-20	6	
5998-01-042-1370ZW	GPN-20	1	
5998-01-042-1371ZW	GPN-20	8	
5998-01-042-1372ZW	GPN-20	7	
5998-01-042-1373ZW	GPN-20	12	
5998-01-042-1374ZW	GPN-20	7	
5998-01-042-1375ZW	GPN-20	7	
5998-01-042-1377ZW	GPN-20		
5998-01-045-7071ZW	GPN-20	7	
5998-01-050-3187ZK	GPN-20	1	
5998-01-050-3606ZW	GPN-20	8	
5998-01-050-9428ZW	GPN-20	2	
5998-01-050-9431ZW	GPN-20		
5998-01-050-9432ZW	GPN-20	8	
5998-01-050-9433ZW	GPN-20	9	
5998-01-050-9434ZW	GPN-20	9	
5998-01-050-9435ZW	GPN-20		
5998-01-050-9436ZW	GPN-20	8	
5998-01-050-9437ZW	GPN-20	9	
5998-01-050-9438ZW	GPN-20		
5998-01-050-9440ZW	GPN-20	9	

5998-01-050-9441ZW	GPN-20	8	
5998-01-050-9442ZW	GPN-20	8	
5998-01-050-9443ZW	GPN-20		
5998-01-050-9444ZW	GPN-20	2	
5998-01-050-9445ZW	GPN-20	9	
5998-01-050-9466ZW	GPN-20	7	
5998-01-051-0524ZW	GPN-20	4	
5998-01-051-0525ZW	GPN-20	2	
5998-01-051-3024ZW	GPN-20	2	
5998-01-051-3027ZW	GPN-20	2	RIMCS - NO SHIP TO ADDRESS LOADED
5998-01-051-3028ZW	GPN-20		
5998-01-051-3029ZW	GPN-20	7	
5998-01-051-3031ZW	GPN-20	8	
5998-01-051-3032ZW	GPN-20	11	
5998-01-051-3033ZW	GPN-20	12	
5998-01-051-3034ZW	GPN-20		
5998-01-051-3035ZW	GPN-20	10	
5998-01-051-3036ZW	GPN-20	6	RIMCS - NO SHIP TO ADDRESS LOADED
5998-01-051-3037ZW	GPN-20	9	
5998-01-051-3038ZW	GPN-20		
5998-01-051-3040ZW	GPN-20	2	
5998-01-051-3041ZW	GPN-20	2	
5998-01-051-3042ZW	GPN-20	9	
5998-01-051-3832ZW	GPN-20		
5998-01-051-3892ZW	GPN-20		

5998-01-051-3894ZW	GPN-20	11	
5998-01-051-6587ZW	GPN-20	9	
5998-01-051-6617ZW	GPN-20	10	
5998-01-051-6618ZW	GPN-20		
5998-01-051-6619ZW	GPN-20	2	
5998-01-051-6620ZW	GPN-20	2	
5998-01-051-6621ZW	GPN-20	2	
5998-01-051-7535ZW	GPN-20	2	
5998-01-051-9313ZW	GPN-20	8	
5998-01-051-9314ZW	GPN-20	10	
5998-01-051-9315ZW	GPN-20	10	
5998-01-051-9316ZW	GPN-20		
5998-01-051-9317ZW	GPN-20	8	
5998-01-051-9318ZW	GPN-20	6	
5998-01-051-9319ZW	GPN-20	8	
5998-01-051-9320ZW	GPN-20	14	
5998-01-051-9321ZW	GPN-20	8	
5998-01-051-9322ZW	GPN-20	8	
5998-01-052-2880ZW	GPN-20	2	
5998-01-052-2881ZW	GPN-20	2	
5998-01-052-2882ZW	GPN-20	2	
5998-01-052-2883ZW	GPN-20	2	
5998-01-052-2884ZW	GPN-20	2	
5998-01-052-2885ZW	GPN-20	2	
5998-01-052-3858ZW	GPN-20		

5998-01-052-3872ZW	GPN-20	2	
5998-01-052-3873ZW	GPN-20	2	
5998-01-052-3874ZW	GPN-20	5	
5998-01-052-5465ZW	GPN-20		
5998-01-053-3387ZW	GPN-20	9	
5998-01-053-6748ZW	GPN-20	2	
5998-01-053-6750ZW	GPN-20	2	
5998-01-053-9416ZW	GPN-20	7	
5998-01-054-4996ZW	GPN-20	2	
5998-01-054-4997ZW	GPN-20	2	
5998-01-054-4998ZW	GPN-20	2	
5998-01-055-5015ZK	GPN-20	2	
5998-01-055-5026ZK	GPN-20	2	
5998-01-055-5027ZK	GPN-20	2	
5998-01-055-5028ZK	GPN-20	2	
5998-01-055-9566ZS	GPN-20	3	RIMCS - NO SHIP TO ADDRESS LOADED
5998-01-057-5548JZ	GPN-20		SOS IS FLZ, SHIP TO ADDRESS IS FLZ (WR-ALC)
5998-01-057-6322JZ	GPN-20		SOS IS FLZ, SHIP TO ADDRESS IS FLZ (WR-ALC)
5998-01-060-8958ZW	GPN-20	4	
5998-01-062-7043ZW	GPN-20		
5998-01-072-9318JZ	GPN-20		SOS IS FLZ, SHIP TO ADDRESS IS FLZ (WR-ALC)
5998-01-079-6934ZW	GPN-20		
5998-01-087-2347ZW	GPN-20		
5998-01-091-0562ZW	GPN-20	3	
5998-01-091-0564ZW	GPN-20	3	

5998-01-091-0565ZW	GPN-20		
5998-01-091-0622ZW	GPN-20	2	
5998-01-091-0624ZW	GPN-20		
5998-01-096-0320ZW	GPN-20	11	
5998-01-100-3002	GPN-20		
5998-01-124-4172ZW	GPN-20	2	
5998-01-124-4173ZW	GPN-20	2	
5998-01-124-4174ZW	GPN-20	12	
5998-01-124-4176ZW	GPN-20	4	
5998-01-128-7716ZW	GPN-20	5	
5998-01-131-5112ZW	GPN-20		
5998-01-161-4912JZ	GPN-20		
5998-01-321-6839ZW	GPN-20	10	NO RIMCS DATA LOADED
5998-01-321-6840ZW	GPN-20	2	
5999-00-023-6105ZK	GPN-20		
5999-01-168-5250	GPN-20	9	
6105-00-169-8508ZK	GPN-20		
6110-01-009-9178ZK	GPN-20		
6110-01-052-4863ZK	GPN-20	7	
6110-01-053-6197ZK	GPN-20		
6110-01-068-6482ZU	GPN-20		
6130-00-146-7999ZK	GPN-20		
6130-00-146-8009ZK	GPN-20		
6130-00-150-0323ZK	GPN-20		
6130-00-152-7106ZK	GPN-20		

6130-00-186-8785ZK	GPN-20		
6130-00-256-4278ZK	GPN-20		
6130-00-401-8583ZK	GPN-20	2	
6130-00-774-3194ZK	GPN-20		
6130-00-774-3212ZK	GPN-20		
6130-00-774-3214ZK	GPN-20		
6130-00-774-3215ZK	GPN-20		
6130-00-774-3227ZK	GPN-20		
6130-00-774-3228ZK	GPN-20		
6130-00-774-3229ZK	GPN-20		
6130-00-922-1237ZK	GPN-20		
6130-01-013-3506ZK	GPN-20		
6130-01-022-7534	GPN-20		
6130-01-022-7535	GPN-20		
6130-01-044-7965	GPN-20	4	
6130-01-050-3140ZK	GPN-20	2	
6130-01-051-3077	GPN-20	7	
6130-01-051-7568	GPN-20	4	
6130-01-051-9402	GPN-20	11	
6130-01-052-5587	GPN-20	2	RIMCS - NO SHIP TO ADDRESS LOADED
6130-01-097-6363	GPN-20	2	
6130-01-128-7780	GPN-20	2	
6140-01-055-7527ZK	GPN-20	2	
6625-01-124-3853	GPN-20		SOS IS FPZ, SHIP TO ADDRESS IS FPZ (SA-ALC)
7021-01-070-5791	GPN-20		SOS IS FLZ, SHIP TO ADDRESS IS FLZ (WR-ALC)

7025-01-168-9364	GPN-20		SOS IS FLZ,SHIP TO ADDRESS IS FLZ (WR-ALC)
7035-01-057-6323	GPN-20		SOS IS FLZ, SHIP TO ADDRESS IS FLZ (WR-ALC)
7035-01-057-6324	GPN-20		SOS IS FLZ, SHIP TO ADDRESS IS FFZ (SM-ALC)
7035-01-057-6325	GPN-20		SOS IS FLZ, SHIP TO ADDRESS IS FLZ (WR-ALC)

	PARTIAL PIPELINE DEMONSTRATION NSN(S)					
Stock Number	System	CSI Level				
4120-01-203-1967ZK	GRN-29	2				
5445-01-065-2194ZK	GRN-29	1				
5445-01-066-1233ZK	GRN-29	1				
5825-01-019-5742	GRN-29	10				
5825-01-034-2153	GRN-29	10				
5825-01-044-6327	GRN-29	9				
5825-01-044-6328	GRN-29	7				
5825-01-044-6329	GRN-29	17				
5825-01-044-6330	GRN-29	17				
5825-01-044-6332	GRN-29	9				
5825-01-044-6335	GRN-29	7				
5825-01-044-6338	GRN-29	16				
5825-01-044-6339	GRN-29					
5825-01-045-4568	GRN-29	7				
5825-01-045-4569	GRN-29	11				
5825-01-045-4650	GRN-29	8				
5825-01-045-4731	GRN-29	6				
5825-01-045-6177	GRN-29	4				
5825-01-045-6178	GRN-29	2				
5825-01-045-6179	GRN-29	2				
5825-01-045-6298	GRN-29					
5825-01-045-6343	GRN-29	7				
5825-01-045-9828	GRN-29					
5825-01-046-5881	GRN-29	11				
5825-01-046-8745	GRN-29	18				
5825-01-046-8817	GRN-29	14				

5825-01-047-2483	GRN-29	4				
5825-01-047-5917	GRN-29					
5825-01-047-5955	GRN-29	7				
5825-01-048-0147	GRN-29	8				
5825-01-048-0148	GRN-29					
5825-01-048-0289	GRN-29					
5825-01-048-0294	GRN-29	6				
5825-01-048-5126	GRN-29	13				
5825-01-048-6192	GRN-29	2				
5825-01-048-6308	GRN-29					
5825-01-048-6309	GRN-29	12				
5825-01-048-6310	GRN-29					
5825-01-048-6468	GRN-29	7				
5825-01-049-0376	GRN-29	2				
5825-01-049-0377	GRN-29	11				
5825-01-061-0583	GRN-29	2				
5825-01-061-5192	GRN-29	2				
5825-01-061-5193	GRN-29					
5825-01-063-2683	GRN-29					
5825-01-063-2692	GRN-29					
5825-01-063-3580	GRN-29	4				
5825-01-063-6741	GRN-29					
5825-01-063-6742	GRN-29					
5825-01-064-5980	GRN-29	2				
5825-01-064-5982	GRN-29	2				
5825-01-064-5983	GRN-29	2				
5825-01-064-5988	GRN-29	24				
5825-01-064-8302	GRN-29	10				
5825-01-064-8303	GRN-29					
5825-01-064-8597	GRN-29	3				

5825-01-065-0517	GRN-29	2				
5825-01-065-0518	GRN-29	2				
5825-01-065-0519	GRN-29	9				
5825-01-066-2398	GRN-29	2				
5825-01-071-2354	GRN-29	5				
5825-01-072-4913	GRN-29	2				
5825-01-075-9817	GRN-29	2				
5825-01-107-5423	GRN-29	4				
5825-01-269-7951	GRN-29	2				
5895-00-264-6984ZK	GRN-29					
5895-01-046-7721ZK	GRN-29	14				
5998-01-020-3593ZK	GRN-29	14				
5998-01-020-4994ZK	GRN-29	6				
5998-01-021-2185ZK	GRN-29	2				
5998-01-044-6322ZK	GRN-29	8				
5998-01-044-6323ZK	GRN-29	9				

	PARTIAL PIPELINE DEMONSTRATION NSN(S)		
Stock Number	**System**	**CSI Level**	
5820-01-182-0100ZK	FRN-43/44/45	6	
5820-01-205-8208ZK	FRN-43/44/45	2	
5825-00-401-2568ZK	FRN-43/44/45	1	
5825-01-181-4383ZK	FRN-43/44/45	32	
5825-01-203-9784ZK	FRN-43/44/45	2	
5825-01-203-9800ZK	FRN-43/44/45	3	
5825-01-204-9790ZK	FRN-43/44/45	2	
5825-01-205-1337ZK	FRN-43/44/45	2	
5825-01-205-8350ZK	FRN-43/44/45	2	
5825-01-206-7633ZK	FRN-43/44/45	3	
5825-01-216-6063ZK	FRN-43/44/45		
5825-01-217-3529ZK	FRN-43/44/45		
5825-01-217-6457ZK	FRN-43/44/45		
5825-01-219-4970ZK	FRN-43/44/45		
5825-01-264-9873ZK	FRN-43/44/45	2	
5825-01-264-9874ZK	FRN-43/44/45	1	
5825-01-325-8748ZK	FRN-43/44/45	3	
5825-01-332-8682ZK	FRN-43/44/45	26	
5895-01-181-4272ZK	FRN-43/44/45	42	
5895-01-182-7194ZK	FRN-43/44/45		
5895-01-182-7351ZJ	FRN-43/44/45		
5895-01-183-0426ZK	FRN-43/44/45		
5895-01-185-2981ZK	FRN-43/44/45	26	
5895-01-203-9144ZK	FRN-43/44/45		
5895-01-203-9785ZK	FRN-43/44/45		
5895-01-204-9747ZK	FRN-43/44/45		

5895-01-204-9748ZK	FRN-43/44/45	4	
5895-01-205-7681ZK	FRN-43/44/45	2	
5895-01-205-7715ZK	FRN-43/44/45		
5895-01-205-8535ZK	FRN-43/44/45		
5895-01-208-1726ZK	FRN-43/44/45		
5895-01-209-8859ZK	FRN-43/44/45		
5895-01-210-0044ZK	FRN-43/44/45	2	
5895-01-217-3529ZK	FRN-43/44/45		
5895-01-217-6457ZK	FRN-43/44/45		
5895-01-218-4146ZK	FRN-43/44/45		
5895-01-264-3436ZK	FRN-43/44/45	4	
5895-01-346-0677ZK	FRN-43/44/45		
5915-01-281-1977ZK	FRN-43/44/45	1	
5915-01-281-1978ZK	FRN-43/44/45		
5915-01-284-3407ZK	FRN-43/44/45	1	
5985-01-182-9659ZK	FRN-43/44/45	8	
5985-01-187-9141ZY	FRN-43/44/45		
5985-01-336-3464ZK	FRN-43/44/45		
5995-01-203-9595	FRN-43/44/45	2	
5995-01-208-0881ZK	FRN-43/44/45	2	
5995-01-208-4398	FRN-43/44/45		
5998-01-178-0548ZK	FRN-43/44/45	23	
5998-01-178-0560ZK	FRN-43/44/45	23	
5998-01-178-1103ZK	FRN-43/44/45		
5998-01-178-1104ZK	FRN-43/44/45	21	
5998-01-178-1105ZK	FRN-43/44/45	26	
5998-01-178-1106ZK	FRN-43/44/45	24	
5998-01-178-1107ZK	FRN-43/44/45	25	
5998-01-178-1108ZK	FRN-43/44/45	12	
5998-01-178-2827ZK	FRN-43/44/45	22	

5998-01-180-7471ZK	FRN-43/44/45	8	NO RIMCS DATA LOADED
5998-01-180-7508ZK	FRN-43/44/45	9	
5998-01-180-7509ZK	FRN-43/44/45		
5998-01-180-7512ZK	FRN-43/44/45	12	NO RIMCS DATA LOADED
5998-01-180-9653ZK	FRN-43/44/45		NO RIMCS DATA LOADED
5998-01-180-9654ZK	FRN-43/44/45	10	
5998-01-180-9655ZK	FRN-43/44/45	8	
5998-01-181-4347ZK	FRN-43/44/45	26	
5998-01-181-4348ZK	FRN-43/44/45	23	
5998-01-181-4349ZK	FRN-43/44/45	5	
5998-01-181-4352ZK	FRN-43/44/45	26	
5998-01-181-4353ZK	FRN-43/44/45	11	
5998-01-181-4354ZK	FRN-43/44/45	29	
5998-01-181-4355ZK	FRN-43/44/45	3	
5998-01-181-4359ZK	FRN-43/44/45	25	
5998-01-182-0066ZK	FRN-43/44/45	10	
5998-01-182-6365ZK	FRN-43/44/45	7	
5998-01-182-6379ZK	FRN-43/44/45		
5998-01-182-7306ZK	FRN-43/44/45	23	
5998-01-182-7307ZK	FRN-43/44/45		
5998-01-182-7308ZK	FRN-43/44/45	25	
5998-01-182-7309ZK	FRN-43/44/45		
5998-01-182-7310ZK	FRN-43/44/45	17	
5998-01-182-7311ZK	FRN-43/44/45	6	
5998-01-182-7312ZK	FRN-43/44/45	9	
5998-01-182-7313ZK	FRN-43/44/45	8	
5998-01-182-7314ZK	FRN-43/44/45	13	
5998-01-182-7315ZK	FRN-43/44/45	11	
5998-01-182-7316	FRN-43/44/45		
5998-01-182-9834ZK	FRN-43/44/45		

5998-01-183-0299ZK	FRN-43/44/45	9	
5998-01-183-0300ZK	FRN-43/44/45	25	
5998-01-183-0341ZK	FRN-43/44/45		
5998-01-183-0342ZK	FRN-43/44/45	11	
5998-01-188-0014ZK	FRN-43/44/45		
5998-01-189-0327ZK	FRN-43/44/45		NO RIMCS DATA LOADED
5998-01-203-7237ZK	FRN-43/44/45	22	
5998-01-203-9770ZK	FRN-43/44/45		
5998-01-203-9783ZK	FRN-43/44/45		
5998-01-203-9786ZK	FRN-43/44/45		
5998-01-203-9787ZK	FRN-43/44/45	2	
5998-01-203-9788ZK	FRN-43/44/45		
5998-01-205-7719ZK	FRN-43/44/45		
5998-01-205-8493ZK	FRN-43/44/45	19	
5998-01-205-8550ZK	FRN-43/44/45		
5998-01-217-6708ZK	FRN-43/44/45	2	
5998-01-273-3874ZK	FRN-43/44/45	1	
5998-01-330-4889ZK	FRN-43/44/45		
5998-01-339-9372ZK	FRN-43/44/45	4	
5998-01-340-1561ZK	FRN-43/44/45	31	
5998-01-340-5314ZK	FRN-43/44/45	28	
5998-01-346-5917ZK	FRN-43/44/45	11	
5998-01-357-6635ZK	FRN-43/44/45	17	
5998-01-372-0093ZK	FRN-43/44/45		NO RIMCS DATA LOADED
6110-01-180-7525ZK	FRN-43/44/45	24	
6110-01-180-9675ZK	FRN-43/44/45	3	
6130-01-187-9929ZK	FRN-43/44/45	23	
6130-01-205-0394ZK	FRN-43/44/45		
6130-01-205-0395ZK	FRN-43/44/45	11	
6140-01-250-5684ZK	FRN-43/44/45		

7025-01-206-1910	FRN-43/44/45		SOS IS FLZ, SHIP TO ADDRESS IS FLZ (WR-ALC)
7025-01-298-7388	FRN-43/44/45		SOS IS FLZ, SHIP TO ADDRESS IS FLZ (WR-ALC)

Name	Organization	Job Function	DSN Phone	DSN Fax	Com Phone
Duane Podhola	SM-ALC/LHA-2	C-E Lean Logistics Test Director	633-2833	633-0671	(916) 643-2833
Gloria Martin	DDMC-XS	Distribution Specialist	633-1501	633-3867	(916) 643-1501
Nonna Bond	SM-ALC/FMDD	Systems Specialist	633-6493	633-2217	(916) 643-6493
LaVon Brashears	SM-ALC/LGS	Depot Supply Representative	633-4580	633-2516	(916) 643-4580
Christine Bauer	SM-ALC/FMIC(1)	Financial Management Specialist	633-2896	633-5890	(916) 643-2896
Glenda Suber	SM-ALC/FMIC(1)	Financial Management Specialist	633-2896	633-5890	(916) 643-2896
Col Stockland	SM-ALC/LHZ	System Support Manager	633-0639	633-0671	(916) 643-0639
Dave Gaskins	SM-ALC/LHZ	Deputy System Support Manager	633-0639	633-0671	(916)643-0639
Paul Friedrich	SM-ALC/LHZR	End Item Manager	633-0605	633-2873	(916) 643-0605
Gavin Hamilton	SM-ALC/LHZR	Supervisor IM & PM	633-0605	633-2873	(916) 643-0605
Bobby Blackburn	SM-ALC/LHZR	Item Management Specialist	633-0605	633-2873	(916) 643-0605
Rita Westberg	SM-ALC/LHZR	Production Managemnet Specialist	633-0605	633-2873	(916) 643-0605
Barbara Gash	SM-ALC/LHZR	Item Management Specialist	633-0607	633-2873	(916) 643-0607
Julius Logan	SM-ALC/LHZR	Item Management Specialist	633-0607	633-2873	(916) 643-0607
Tom Boyd	SM-ALC/LHZT	Equipment Specialist	633-0635	633-2873	(916) 643-0635
Sue Browning	SM-ALC/LHZT	Equipment Specialist	633-0633	633-2873	(916) 643-0633
Ruth Burrow	SM-ALC/LHZT	Production Management Specialist	633-0605	633-2873	(916) 643-0605
Alice Tucker	SM-ALC/LHZT	Equipment Specialist	633-0635	633-2873	(916) 643-0635
Lou Timmons	SM-ALC/LHZT	Equipment Specialist	633-0635	633-2873	(916) 643-0635
Earle Thavenet	SM-ALC/LHZC	Program Manager	633-0693	633-2873	(916) 643-0693
Capt. Baumbach	SM-ALC/LHZN	Program Manager	633-0639	633-2873	(916) 643-0639
Chuck Robertson	SM-ALC/LHPG	Shop Supervisor	633-2088	633-4187	(916) 643-2088
Mike MIller	SM-ALC/LHPGC	Planner	633-3072	633-4187	(916) 643-3072
Glenn Davis	SM-ALC/LHPGC	Scheduler	633-2088	633-4187	(916) 643-2088
Richard Willey	SM-ALC/LHPDDC	Shop Supervisor	633-3997	633-4187	(916) 643-3997
Connie Petruske	SM-ALC/LHPDDC	Scheduler	633-3997	633-4187	(916) 643-3997
Ari Guillermo	SM-ALC/LHPDDC	Planner	633-0475	633-1218	(916) 643-0475

Stock Number	Noun	PCN	System	IM	Hours	Days
5820006156050ZK	AMPLMODU	36744A	GRN-9/GRN-20	GHE	22.8	8
5820006276641ZK	AMPMOD	23360A	GRN-20	GHE	26.8	8
5820007686877ZK	AMPLIFIE	15359A	GRN-9	GHE	29.8	8
5820008400175ZK	AM-1701A	65788A	GRN-19	GHE	33.0	8
5820010712815	AMPLIFIER	40076A	TRN-41	DHE	15.8	6
5825000787612	ANTCONTR	83599A	TRN-17	GHE	46	12
5825002330928	R1658	24883A	GRN-20	GHE	31.0	9
5825003583095	FMO	13532A	JCD (AACY)	GHE	20.7	7
5825004777806	MULTIPLI	21940A	TRN-26	GHE	15.2	6
5825004777807	SENSOR	21632A	TRN-26	GHE	6.3	4
5825004839706	OSCILLAT	40071A	TRN-26	GHE	17	7
5825004839709	RECEIVER	40072A	TRN-26	GHE	17.5	7
5825004929793	RECVR	13533A	GRN-20	GHE	25.8	8
5825004929795	RECVR	13534A	GRN-20	GHE	25.8	8
5825004929803	CODER	13536A	GRN-20	GHE	32.4	10
5825004929804	CODER	13537A	GRN-20	GHE	33.0	10
5825004929806	CONDPLXR	13539A	GRN-20	GHE	67.0	17
5825004929811	C8422GRN	15948A	GRN-20	GHE	68.7	17
5825004929812	C8419	23734A	GRN-19	GHE	29.7	9
5825004929814	CODER	13544A	GRA-111	GHE	39.9	11
5825004929815	CODER	13545A	GRN-19	GHE	40.8	11
5825004981472ZK	RCVRTRAN	37342A	TRN-26	GHE	206.9	42
5825004981475ZK	CONTROL	26040A	TRN-26	GHE	97.8	23
5825004981477ZK	SUPPORT	27026A	TRN-26	GHE	127	26
5825005192202ZK	MONITOR	67596A	TRN-31	GHE	105.2	24
5825005533925	CV-460	65377A	TRN-31	GHE	12.6	6
5825006156084	URN-3	77320A	TRN-31	GHE	15.8	6
5825006276639	CONTDUPL	37322A	GRN-9	GHE	60.8	15
5825006276643	CV-650	68949A	GRN-9	GHE	21.7	7
5825006427173ZK	KEYER	38996A	404L - URN-5	GHE	6.7	4
5825006582792	MULTIPLI	65180A	GRN-20	GHE	19.8	7
5825006704675	CODER	79411A	GRN-9	GHE	4.5	4
5825007133600	CODENIND	13536A	GRN-9	GHE	10	5
5825007133602	CV-673	68209A	GRN-9/GRN-20	GHE	19.8	7
5825007615373ZK	RECVR	13551A	GRN-19/GRN-31	GHE	29.8	9
5825008400176ZK	DUPLEXER	65790A	GRN-19	GHE	76.5	17
5825010124838ZK	SPECFLTR	29091A	GRN-9/TRN-31	GHE	23.8	8
5825010321238	AMPLIFIER	24529A	TRN-26	GHE	45.0	12
5825010701448ZK	RECEIVER	39551A	TRN-41	GHE	27.7	9
5825010701470ZK	CKTCD	39554A	TRN-41	GHE	15.2	6
5825010702309ZK	ANTENNA	40259A	TRN-41	GHE	24.5	8

5825010731182ZK	REC/TRAN	38485A	TRN-41	GHE	187.7	39
5825012166063ZK	FCPU	26117A	FRN-43	GHC		1
Stock Number	Noun	PCN	System	IM	Hours	Days
5895003585076ZK	AMPIF	13530A	GRN-19/TRN-31	GHE	11.9	5
5895003585079ZK	AMPLIFIER	13531A	GRN-19	GHE	11.9	5
5895004203056ZK	AMPLIFIR	66849A	GRN-9/GRN-20	GHE	11.9	5
5895004502524ZK	AMP	78041A	GRA-120	GHE	40.0	11
5895004839714ZK	MULTIPLR	28457A	TRN-26	GHE	15.2	6
5895004962183ZK	CONTROLS	16363A	TRN-31	GHE	13.3	6
5895004981547ZK	ID1661	24377A	TRN-26	GHE	80.2	19
5895005528624ZK	AMPLIFIE	77200A	GRN-20	GHE	15.8	6
5895006155997ZU	MIXERSTA	16271A	GRN-9/GRN-20	GHE	13.3	6
5895006156085ZK	RECEIVER	77551A	GRN-19	GHE	15.8	6
5895006175779ZK	MULCHSIS	77756A	GRN-20	GHE	10.0	4
5895006175789ZK	RECEIVER	78704A	GRN-20	GHE	15.3	6
5895006279705ZK	CAVITY	40069A	GRN-9	GHE	15.5	6
5895007615370ZK	AMPMIX	13550A	TRN-31	GHE	11.9	5
5895007692767ZK	AMPLIFR	11540A	GRN-9	GHE	11.2	5
5895008089919ZK	CAVITYRF	65883A	GRN-9/GRN-20	GHE	10.0	5
5895008126181ZK	CAVITY	65388A	GRN-9/19/20	GHE	10.0	4
5895008812822ZK	AMPLIFIR	12044A	AACY (JCD)	GHE	21.2	7
5895011827351ZJ	SIDEBAND	56388A	FRN-43	GHC	40.0	11
5895011829834ZK	SIDEBAND	83595A	FRN-43	GHC	20.0	7
5895011830426ZK	AMP	42109A	FRN-43	GHC	20.0	7
5895012039144ZK	PWR SUP	79558A	FRN-43	GHC	40.0	11
5895012098859ZK	RMT CTL	27408A	FRN-43	GHC	50.0	13
5915005899709ZK	FILTER	40197A	GRN-20 (SICA)	GH5	35.0	10
5915012811978ZK	EMI FLTR	55045A	FRN-43	GHC	30.0	9
5955004777872ZK	5/9A35	24027A	TRN-26	GHE	6.0	4
5975004929820ZK	CABINET	37324A	GRN-19	GHE	127.6	28
5985001373931ZK	GRA121A	36958A	GRA-121	GHE	78.8	20
5985001373932ZK	ANTENNAA	22006A	GRA-121	GHE	78.8	20
5985001565575ZK	ANTENNA	21284A	GRA-120	GHE	84.0	22
5985001595694ZK	ANTENNA	36452A	GRA-120	GHE	76.2	21
5985001595697	MONITORA	23191A	GRA-121	GHE	48.7	15
5985001771668	ANTCNTRL	38174A	GRA-120/121	GHE	67.9	17
5985002536676ZK	ANTCON	26017A	TRN-26	GHE	94.0	22
5985004661015	MONITORA	29179A	GRA-120	GHE	51.1	16
5998004517002ZK	2A1A1	24528A	TRN-26	GHE	20.3	7
5998004777882	CKT CD A	41018A	TRN-26	GHE	12.0	6
5998004779085ZK	CCA	27392A	GRA-120	GHE	10.0	4
5998004839762ZK	CKT CRD	84349A	TRN-26	GHE	10.0	5

5998004866326ZK	CKT CD A	41417A	TRN-26	GHE	8.0	5
5998010701463ZK	CIR CD A	40170A	TRN-41	GHE	16.0	6
5998010701464ZK	CIR CD A	40172A	TRN-41	GHE	8.0	5
5998010701468ZK	CIR CARD	39552A	TRN-41	GHE	7.6	5
Stock Number	Noun	PCN	System	IM	Hours	Days
5998010809754ZK	SYNTHEZR	40171A	TRN-41	GHE	24.0	8
5998011465507ZK	ENCODER	41418A	TRN-26	GHE	24.0	8
5998011781103ZK	PWR SUP	47255A	FRN-43	GHC	15.0	6
5998011827316ZK	AUDIO PR	30269A	FRN-43	GHC	12.0	3
5998011890327ZK	MODULATR	66115A	FRN-43	GHC	20.0	7
6110000015365ZK	REGULTOR	39395A	TRN-17	GHE	15.2	6
6110004854166	REGULATR	32170A	TRN-26	GHE	20.5	8
6130000526714ZK	PWRSPLY	23372A	TRN-31	GHE	21.5	7
6130000526715ZK	PP-956	67155A	GRN-19	GHE	30.0	9
6130003515731ZK	PWRSPLY	26016A	GRN-20	GHE	27.5	8
6130004481091	CIR CD A	40073A	TRN-26	GHE	11.5	5
6130004660699ZK	PWRSUPLY	36202A	TRN-26	GHE	32.6	9
6130004839766ZK	5-9PS1	24610A	TRN-26	GHE	19.5	7
6130004929805ZK	POWRSPLY	29839A	GRN-20	GHE	19.5	7
6130004929810ZK	PP6406	23733A	GRN-19	GHE	20.5	7
6130006276644ZK	PWRSUP	23206A	GRN-20	GHE	20.5	7
6130006276647ZK	POWRSPLY	36743A	GRN-19/GRN-20	GHE	20.3	7
6130007265889ZK	POWRSPLY	29843A	GRN-19/GRN-20	GHE	11.4	5
6130007265890ZK	POWERSUP	28795A	GRN-9 (SICA)	GH5	19.8	7
6130010812360ZK	PWR SUPP	39553A	TRN-41	GHE	16.7	6
6130011556468ZK	3/8PS1	24029A	TRN-26	GHE	35.3	10
6625004991872ZK	OSSCOPE	39396A	TRN-26	GHE	62.9	16

COMMUNICATIONS-ELECTRONICS
LEAN LOGISTICS DEMONSTRATION
APPENDIX A-1
IMS & PMS Setup Procedures

The following instructions should be used by each Item Management Specialist (IMS) as they apply to the actual NSNs and all their related interchangeable and substitutable (I&S) items.

1. Lean Logistics shortfalls for the total pipeline demo are being computed for the final repair requirement prior to Lean Logistics start-up. Note: Management Review Codes are not being used for this demonstration.

2. The Production Management Specialist (PMS) must contact the depot repair shop scheduler to induct all assets required to fill the shortfall in support of the CSI levels for the total pipeline demonstration. Induct NLT 16 Sep 94. The 804 negotiation will follow if necessary. The C-E SSM will ensure funds availability if necessary. This step is critical and must be accomplished as a top priority.

3. The IMS must immediately send a message to all storage sites (DDST) and order all eligible assets into the FFB account NLT 20 Sep 94. Request reply by priority letter to 652ABG/LGSPS. All ineligible assets will be put in Ownership Purpose (OP) code "B" at the depot if serviceable and OP code "J" for unserviceable assets.

4. The PMS must request that the shop scheduler place all items for the total pipeline demo on the express table effective NLT 1 Oct 94. (Remember: any "F" condition items remaining on record will automatically be inducted into maintenance when the asset table is loaded). The express table should be 99 each.

5. All requisitions should show project code "879" and should ship automatically by D035.

6. For the total pipeline demo, the PMS must notify the depot repair shop to stop calling in turn-in documents to the ALC. Turn-ins should be processed to supply within the Lean Logistics time allowance for shipment. (Only 2 days should pass between the time the asset is sold until it is received by the customer).

7. Assets produced by the shop after 1 Oct 94, that are over the CSI level are excess to the demonstration (ineligible stock), should be express shipped to the SOS ALC by the IMS on a post-suspense document, marked for Ownership Purpose code "B."

8. Because of the importance of the demonstration, the PMS will request that all assets in the shop exceeding the computed Lean Logistics shortfall (work with the IMS if there is a question on this) as of 27 Sep 94 be returned to supply in condition code "F." (The demonstration seeks to see if the shops can meet the "negotiated repair times" with a limited number of carcasses).

COMMUNICATIONS-ELECTRONICS
LEAN LOGISTICS DEMONSTRATION
APPENDIX A-2
CHECKLISTS

CHECKLIST FOR BASE COMM UNIT

1. Ensure that the materiel controller is qualified as limited supply inspector. This applies to those MAJCOMs that use the unit as the express transportation point.

2. Obtain express transportation labels.

3. Give address to MAJCOM representatives for R2P delivery location.

4. Obtain boxes and training on packing from TMO.

5. Ensure materiel control has procedures for contacting local Federal Express carrier from your MAJCOM POC. Get Federal Express point of contacts (POCs) and submit them to MAJCOM representatives.

6. Arrange for AT-AC password and training from MAJCOM/base delegated training person.

7. Establish local procedures with chief of supply (COS) for C-E lean logistics processing.

8. Delete any forward supply point details on the non-essential items and turn-in assets to base supply.

9. Make a sign to remind everyone to use project code 879 on the system in the demo. This applies to reparable items only. Post sign in materiel control, maintenance workcenter, and any other applicable locations.

10. Ensure copy of demo plan is on hand and has been reviewed by all personnel.

11. Develop local procedures to expedite processing of reparables on lean logistics demo systems including bypassing of QC.

12. IAW MAJCOM direction request FY DODAAC account for locations other than base supply that are involved in R2P deliveries. DODAAC requests will be forwarded for submission /approval of MAJCOM DODAAC monitor to AF monitor (AFMC).

13. Use correct system SRD on all requests to ensure accurate tracking of stats.

CHECKLIST FOR CHIEF OF SUPPLY

1. Obtain from the MAJCOM the process for use and tracking of ineligible lean logistics stock..

2. Adjust SBSS records as instructed by MAJCOM by specified date.

3. Review the new item loads to identify demo NSNs weekly. Advertise demo system NSNs and SRDs so the correct project code and RDD of 777 will be used on issues/requisitions/shipments. Demand Processing /Research sections should ensure the appropriate codes are loaded as soon as possible.

4. Capture baseline data and monthly report metrics.

5. Track metrics weekly for October and monthly thereafter.

   a. Base Reparable Evacuation Time
   b. Base Issue Effectiveness
   c. Ineligible Withdrawals
   d. Inventory Levels
   e. RSP Issue

6. Support any RDO requests from the depot.

7. Provide authorized training as a limited supply inspector to comm unit personnel as necessary.

8. For AMC test bases, ensure SBSS connectivity and access have been established.

9. Obtain ATAC passwords and training.

10. Obtain from the MAJCOM the process for use and tracking ineligible stock

11. Report ineligible stock withdrawals to MAJCOM POCs .

12. Ensure a copy of demonstration plan has been reviewed and is on file .

13. Ensure REX modifier and a SEX modifier are loaded as specified.

14. Verify RIMCS addresses for all the demo items have been loaded.

CHECKLIST FOR MAJCOM

MAJCOM LG

1. Ensure distribution of plan to all base supply.

2. Get formal approval of the plan by obtaining LG/SC/CI signature.

3. Pass upload program to all bases.

4. Track metrics weekly for October and monthly thereafter.

   a.. AWP Time

   b. Ineligible Withdrawals

5. Obtain ATAC passwords and training.

6. Develop and publish process for use and tracking of ineligible stock withdrawal.

7. Ensure all baseline adjustments are made by the bases.

8. Obtain access to DO35:

   a. D035C - In data/SM-ALC

   b. D035A - Serviceable & asset transactions

   c. D035K - Data equipment to SBSS

   d. D035T - Transportation date

9. Verify that addresses for delivery/pick-up locations are correct. Provide addresses to HQ USAF/LGM-2 (Lt Col Melchor) after verification.

10. Ensure expeditious handling of FY account requests.

11. Provide to the base supply and comm units a list of ATAC trainers .

MAJCOM COMM

1. Ensure distribution of the demonstration plan to comm units.

2. Obtain DCS level signature on demonstration plan.

3. Coordinate on LG procedures for use and tracking ineligible stock withdrawals.

4. Assist LG in verifying delivery and pick up addresses for the express carrier and pass on to USAF/LGM-2 (Lt Col Melchor) by 9 Sep 94.

CHECKLIST FOR DEPOT

1. Item managers review all demo items to ensure the CSI and lean levels are filled.

2. Obtain ATAC password and training for Item Managers.

3. Verify that DLA express transportation process is in place.

4. Collect data on RDO and denial rate to fill CSI levels.

5. Collect D041 baseline data from the March and September Comps for analysis of change to the requirements process. In addition, collect the info by stock number on buy reduced/canceled, increase in long supply, outyears reductions, etc.

6. Change all ineligible assets to supply condition code ' B ' before updating the express table.

7. Ensure NSN for the total pipeline demonstration are loaded on express table.

8. Identify any monetary impacts to AFMC and Air Staff.

9. Track metrics weekly for October and monthly thereafter.
   a. AWP Time

   b. Base Shipment Processing Time

   c. Reparable Transit Time

   d. CSI Shipping Time

   e. Depot Processing and Depacking Time

   f. Packing to CSI Time

   g. Packing to Shipping Time

   h. Request to Fill Time

   i. Serviceable Transportation Time

j. Shop Repair Time

k. Transaction Communication Time

l. CSI Issue Effectiveness

m. Ineligible Withdrawals

n. Inventory Levels

o. MDR/PQDR Incidents

p. Negotiated vs. Actual Repairs

10. Identify any metrics not present in the automated process for collection.

11. Item managers will flag reparable returns that were made from ineligible stock withdrawals and upon receipt of reparable transfer the item to condition code "B."

12. Develop a process to review the CSI and base lean levels, to include tracking of changes, frequency of updates, etc.

13. Load Project Code "879" in the D035K for all items in the Lean Logistics demonstration.

14. Change Ownership Purpose (OP) code of serviceable and unserviceable ineligible stock. See IMS & PMS Setup Procedures, Appendix A-1 for any clarification.

15. Maintain backup Express Table data for Project Code "879" assets.

16. Provide advance notice of reparable returns if required.

CHECKLIST FOR AFC4A

1. Work with AMC and ACC to develop automated baseline process for updating Chief of Supply records.

2. In coordination with SM-ALC, document and publish updates to the demonstration plan with SM-ALC.

3. Get updated demonstration plan to MAJCOMs ASAP.

4. Obtain ATAC password and training.

5. Finalize CSI and base lean levels with SM-ALC.

6. Review D043 to ensure RIMCS addresses for all demo stock numbers are available and SM-ALC is PICA.

NMCS Rates

COMMUNICATIONS-ELECTRONICS
LEAN LOGISTICS DEMONSTRATION
APPENDIX A-3
DLA Processing

DLA Processing - "F" Condition Materials (Reparables):

1. When material is received at the DDMC it is off loaded from its source of transportation. The material is then processed through incheck procedures and is forwarded to the appropriate processing area. Size and type of material will usually dictate where the item is processed. The material could go to one of the following areas.

   a. Small item receipt area

   b. Bulk receipt area

   c. Outlying area

   d. Production turn-in area

2. When the processing area receives the material, an inspector will check the material for all receipt documents (DD Form 1348-1, DD Form 250, DD Form 1149). The material is also inspected for damage, correct NSN, and other data.

   Note: If material is damaged through shipment or the NSN sticker or tag do not match the NSN on the item, a Report of Discrepancy (ROD) will be prepared. That item is segregated awaiting inventory management specialist (IMS) disposition.

3. If the material can be further processed, the "D6" transaction is entered in the D035K system. The system will then generate a "D7" backorder release. The asset and the paperwork will then be routed to the express staging area.

4. Once the material is received in the staging area it is moved to the maintenance area where they take possession of the property.

   Note: Before this process can occur, the Lean Logistics (LL) NSNs (Master and Subs) must be loaded into the D035K Express Table with an "F" condition code. Project Code table in D035A must be loaded with Lean Logistics Project Code 879, because PC is used in G402A for tracking.

(See Flow Diagram - DLA Processing "F" Condition Materials)

DLA Processing - "A" Condition Materials (Serviceables):

1. When serviceable material is received at DDMC from maintenance it is off loaded from its source of transportation. The material is then routed to the production turn-in area and is inspected. If problems are detected with the material or paperwork, maintenance will be contacted for further instructions or clarification. If material is OK and all paperwork is complete, a "D6" transaction will be entered in the D035K system. This action will produce an output that will determine what further action to take with the material.

2. If the item is not an express item, the paperwork for the item will be held and the item will be packaged for storage. The paperwork will be attached to the asset and the packaged asset will be routed to the consolidated storage area. This item will remain in the storage area until a demand is received for the asset. When this occurs, the asset is pulled from the storage area. If the automated warehouse system is used, the item must be cleared from the system. The demand against the item will produce a DD Form 1348-1A that will be used to route the material to the customer. The item will be routed to packaging for final packaging and shipment.

3. If the item is an express item (one needed ASAP), a DD Form 1348-1A will be generated and the material will require immediate processing. The material will be moved to express packaging where it will be packed for shipment.

4. Once the item is ready for shipment, the express ticket will be attached to the material and it will be sent to the packing address and labeling system. Labels will be produced which include: Ship To:, Ship From, Transportation Control Number (TCN). The labels and DD Form 1348-1A will be placed on the package and it will be forwarded to the surface terminal.

5. When the package is received at the surface terminal, it is checked for proper tagging and labeling and is shipped to its destination.

(See Flow Diagram - DLA Processing "A" Condition Materials)

COMMUNICATIONS-ELECTRONICS
LEAN LOGISTICS DEMONSTRATION
APPENDIX A-4
Shop Repair Process

1. The repair process begins when the shop receives notification that a draw has been made on the Consolidated Serviceable Inventory (CSI). This will be an indication that a requirement now exists in the CSI and an asset should be arriving in the shop within a few days. Once this asset arrives at the repair shop, the shop scheduler will note the time of its arrival on the shop tracking system and notify the shop work leader that the asset is available to work. The work leader will validate the asset to determine that it is the correct asset. If the NSN differs from the information on the tag, the work leader will inform the materiel handler to return the miss identified asset to DLA, correct any accounting changes, and note action taken on the shop tracking system.

2. If the asset is OK to work, the work leader will assign the repair task to a technician. The technician will pull the asset from the shelf and note the time he/she begins any actions on the asset itself.

> Note: Assets will be worked after completion of other assigned work. Lean Logistics items will have routine priority in the repair cycle. In work items will be completed prior to starting work on Lean Logistics items. MICAPS will be fulfilled as in prior operations.

The technician will then perform an E&I on the asset to determine the type of actions that must be taken to make the asset serviceable. The technician will note completion of the E&I and the action(s) that will be taken on the asset.

3. There are three conditions that could exist after the E&I process and they are as follows:

a. The asset may require parts in order to make the asset serviceable.

b. The asset may require support shop action prior to overhaul.

c. The asset may only require normal repair action.

> Note: If the asset has shipping damage, the technician will instruct the material handler to accomplish a Report of Discrepancy (ROD) on the asset and then it will be processed as a normal overhaul action.

4. If the asset requires support actions such as paint, machining, sheet metal, etc., the technician will disassemble the asset, store materials and process the parts to the support shops. The technician will note date shipped and actions needed on the shop tracking

system. The support shop will complete the necessary actions and return the parts to the OPR shop. When the parts are received by the OPR shop, the date will be recorded in the tracking system. At this point the repair phase of the process will begin.

5. If parts are needed to complete repair of the asset, the technician will order the required bits & pieces or shop replacement items to complete the repair. The asset will then be placed in Awaiting Parts (AWP) status until the parts arrive. The date of initial AWP and receipt of the requested parts will be recorded in the shop tracking system. Once all parts are received the asset will go to the repair stage of the process.

6. Once all parts are received and all support repairs have been accomplished the asset can continue through the repair process. The unit will be disassembled, cleaned and repaired as needed. The beginning and ending of the repair process will be recorded on the shop tracking system. After the unit has been repaired it will be reassembled. The beginning and ending of the reassembly process will also be recorded in the tracking system.

7. The next phase of the process is the electrical checkout of the asset. If the unit fails to pass the required test, the technician will troubleshot the asset to determine if additional parts will be needed. If additional parts are required, the technician will order the necessary parts and complete step 5 above and continue the repair. If no parts are needed the technician will perform what ever repair action is needed to bring the asset into serviceable condition and process it to the final assembly phase of the process. If the unit passes all tests, it will go on to final assembly. Again, beginning and ending entries will be required in the tracking system.

8. Once the asset has completed all electrical tests the final assembly can be accomplished. The beginning and ending of this event will be recorded. After the final assembly is completed the technician will prepare the asset for shipment and log the asset in the control log. He/she will then inform the work leader that the repair action is completed who will in turn inform the scheduler to process the asset into the system. The scheduler will note completion of the repair and notification of transportation. Once the asset is picked up, the scheduler will note asset shipment time.

9. Recording of the repair process, asset movement, Q-time, and task accomplishments, etc., must be accomplished on all MISTR assets processed through the demonstration areas. This information will help identify constraints, problems, and methods to improve existing procedures. Data tracking will include the major areas identified on the Repair Process Tracking sheet and any additional information that impacts processing of assets. This information will be collected and forwarded to SM-ALC/LHA-2, C-E Lean Logistics Office, for analysis.

COMMUNICATIONS-ELECTRONICS
LEAN LOGISTICS DEMONSTRATION
APPENDIX A-6
R2P Processing

Base Level Processes For Express Transportation During Lean Logistics Demonstrations

TRANSPORTATION PLANNING

1. PURPOSE: To provide instruction/guidance for implementing base-level express shipping procedures for Traffic Management Flights in support of Supply, Maintenance, and Communications during the Lean Logistics Demonstrations.

2. CONCEPT. ALC Shops will improve their process for repairing unserviceable items. Unserviceable items will be shipped via express transportation from the base to the depot where they will be inducted into repair quickly, repaired and made immediately available for the Consolidated Serviceable Inventory (CSI) or direct shipment from the depot to fill a requisition. Serviceable items will be shipped via express transportation to fill requisitions. As the process improves, i.e., as parts move quickly to and from the depot and requisitions are reliably filled, inventories of spare parts can be reduced. Partial Demo will not include automatic induction into repair.

a. To expedite the flow of parts to and from the bases, Return and Repair Packaging (R2P) procedures will be used during the LL Shop Demonstration. R2P is a process in which reparable parts are shipped from a base by overnight, express door-to-door transportation (FEDEX) direct to the depot. The key objective is to expedite (or eliminate) base-level handling and move the item into to transportation system as quickly as possible.

b. Upon receipt of a unserviceable item, maintenance/communications personnel place the reparable item in the reusable container, attach a shipping label, and await pickup by the express package carrier (by-passing traditional supply and transportation nodes). The express package carrier also delivers serviceable items from the depots directly to the flightline Parts Store or Communications Squadron Material Control.

3. APPLICABILITY.

a. This guidance applies to traffic management, supply, communications, and maintenance organizations shipping and receiving items during the LL Shop Demonstrations.

b. The R2P process will not be used for shipments to or from other locations (e.g., lateral support).

c. Includes only the NSNs specifically identified by in each in the table of the Demonstration Plan.

d. Assets that require crates or exceed express carrier weight/size limits, hazardous cargo or classified cargo capability, will be processed through TMO.

e. Project Code 879 apply to all designated NSN shipments during the demonstrations.

4. PROCEDURES.

a. GENERAL: Assets to be shipped using these procedures are identified by NSN in the LL Demonstration Plans. Each Major Command (MAJCOM) must adapt these procedures to align with its command policies and procedures for Return and Repair Packaging.

(1) Communications-Electronics parts should be taken the Communication Squadron's Material Control.

(2) Material Control (MC) personnel process NRTS/TIN actions and identify items as eligible shipments. Identify demonstration assets using the green condition tag (DD Form 1577).

b. Advance NRTS: A reusable container may not be immediately available. If flightline reusable container storage areas are checked and the appropriate container is not on hand, secure assistance from TMO.

c. Inbound shipments:

(1) FEDEX will deliver serviceable assets direct to the location designated by each base. To expedite processing and reduce handling, Communications Squadron material control or equivalent is best.

(2) MC personnel will sign the FEDEX airway bill acknowledging receipt of the shipment. A copy of DD Form 1348-1/a (removed from the packing list or interior of container) will be sent to the Document Control Section of Base Supply. The FEDEX airway bill will be sent to TMO.

(3) Base Supply will in-check the shipment into SBSS and process a receipt document.

(4) Once the receipt has processed, immediately notify maintenance personnel for pick-up or place the item in stock. If the item due-out releases to a MICAP requirement, notify the Mission Support Section.

d. Outbound shipments:

(1) Maintenance personnel request a replacement item (through CAMS from Maintenance/Material Control) by using standard issue procedures. Supply will either issue the item from stock or establish a backorder for the asset.

(2) Once received, maintenance personnel unpack the serviceable item using care not to damage the reusable container or the enclosed return shipping document.

(3) After removal from the system, the reparable is placed in the same reusable container. Once tested and determined that the item is NRTS, the reparable and container will be delivered to the appropriate location. If the item is determined to be serviceable, it is returned to Supply.

(4) MC personnel will process a Not Reparable This Station (NRTS) -1 Turn-In (TIN) to generate a DD Form 1348-1/a shipment document to return the reparable LRU to the Source of Repair (SOR). A return shipping document should be enclosed within the container in which the serviceable was received (if not, see (6) below).

(5) MC personnel will carefully pack the reparable item in the reusable container along with two copies of the DD Form 1348-1/a, the AFTO Form 350, and the DD Form 1575, obliterate all old markings/labels from previous shipments by spray paint (do not tear off) and affix the enclosed return label to the box.

(6) If a return label is not enclosed, select one of the pre-printed airway bills with the correct SOR destination and building number. If a pre-printed airway bill is not available, complete blocks 1,3,4,5, and 6 on a blank airway bill. Ensure the origin base name is entered in the "Company" block, the "ship to" matches the SOR (the FY series SRAN for the SOR in CC 45-50 of the TIN, TEX code in CC 51, and SHP document number in CC 67-80). IMPORTANT NOTE: The Transportation Account Code (TAC) and the Transportation Control Number (TCN) must be annotated in the "Internal Billing Reference Block" of the Airway Bill (Sample: F2RS/FB4500 3242 0001 xxx). The TAC prints in block 21 of the DD Form 1348-1 and in block 16 of the DD Form 1348-1/a. The TCN is the requisition number with "xxx" added. This will ensure the Item Manager-not the base-is billed for the shipment.

(7) Securely tape the container and transfer the reparable item to the designated pick-up point.

(8) When pick-up is made, the FEDEX courier will annotate the airway bill with his/her employee number. The MC then enters the time the shipment is picked-up along with the FEDEX Airway Bill number on the DD1348-1/1a. The shippers copy of the FEDEX Airway Bill is forwarded to TMO. Copy 1, DD Form 1348-/1/1a is sent to Document Control in Base Supply.

4. RESPONSIBILITIES.

a. Air Logistics Centers: Identify applicable NSN. Screen NSN for R2P criteria (weight, height, classification, and hazard). Coordinate with DLA to ensure prompt billing and payment of FEDEX shipments is accomplished at the Depots.

b. HQ Defense Logistics Agency: Ensure return labels are placed inside serviceable containers.

c. MAJCOMs:

(1) Appoint a MAJCOM Transportation Staff point of contact for the LL Demonstrations. Coordinate actions with MAJCOM counterparts in Supply, Communications, and Maintenance.

(2) Get the word out on the nature and applicability of the LL demonstrations in each command.

(3) Review these procedures and supplement as necessary IAW command policy.

(4) Ensure base-level personnel are trained and utilizing these procedures

(5) Info HQ USAF/LGM-2 on all message traffic.

(6) Ascertain the pick-up and delivery location on each base for LLC Demonstration NSNs and forward information to HQ USAF/LGM-2 to obtain pre-printed airway bills.

(7) Monitor metrics and assist bases in their continuous improvement efforts.

d. Transportation Squadron/Traffic Management Flight.

(1) Develop local procedures in conjunction with maintenance and supply counterparts to implement express transportation support for the LL Demonstrations. Assist in selecting pick-up and delivery locations.

(2) Provide to MCs packing materials, tools, and supplies such as tape, obliterating spray, and airway bills.

(3) Establish agreements and arrange schedules with local Federal Express representatives for daily pickup and delivery at the selected locations.

(4) Train MC personnel to manually complete FEDEX Airway Bills if required.

(5) Issue/process Transportation Discrepancy Reports (TDRs) (SF 361s).

(6) Develop procedures for tracing late or lost shipments.

(7) Provide Traffic Management assistance/expertise as required.

(8) Establish and maintain a separate LL Demonstration file for the FEDEX Airway Bills that the MC processes and ships.

(9) If volume of shipments warrant and if desired by MC personnel , coordinate with local FEDEX representative to obtain a Powership Terminal for the MC pick-up point. Notify your MAJCOMs and USAF/LGM-2 if you obtained an additional powership as a result of these demonstrations.

(10) Ensure airway bills are used to clear the Shipment Suspense Record (SSR).

d. Chief of Maintenance/Communications Squadron Commander and Chief of Supply

(1) Designate flightline/Comm Squadron pick-up and delivery points (bldg./room numbers) and assist the TMO in developing local procedures.

(2) Appoint personnel to pack, process and release reparable R2P LRUs for shipment and receipt and in-check serviceable LRUs.

(3) Maintain LRU/reusable container integrity.

(4) Coordinate Advance NRTS procedures with Traffic Management Flight. Ensure the correct R2P destination, TAC and TCN are listed on the airway bill.

COMMUNICATIONS-ELECTRONICS
LEAN LOGISTICS DEMONSTRATION
APPENDIX A-5
Points of Contact

Name	Organization	DSN Phone	DSN FAX	E-Mail Address
Duane Podhola	SM-ALC/LHA-2	633-2833	633-0671	podholdu@smdis01.af.mil
Paul Friedrich	SM-ALC/LHZR	633-0605	633-0671	
Dave Gaskins	SM-ALC/LHZ	633-0639	633-2873	gaskinsda@sm-alc.af.mil
Charles Acton	HQ USAFE CSS/SCMCC	480-5925	480-7605	cacton@scilan.usafe.af.mil
MSgt James Washington	HQ USAFE/RSLSW	480-6389	480-7748	jwashing@lglan1.usafe.af.mil
Dave Young	HQ AMC/SCMM	576-4071	576-6573	mscmm19.hqamc@mhs.safb.af.mil
MSgt Bob Groff	HQ AMC/LGSWS	576-3049	576-1878	rgroff.msmail@mhs.safb.af.mil
Thomas Tolman	HQ AFMC/LGI-LL	787-7771	986-1664	tolman@wpgate1.wpafb.af.mil
SMSgt Bill Mader	HQ AFMC CSO/SCSL	787-4968	986-1369	maderw@wpgate1.wpafb.af.mil
George Grove	HQ AFMC/LGSP	787-2713	787-4244	grove@wpdis01.wpafb.af.mil
Gary Bates	HQ AFMC/LGSP	787-2713	787-4244	gbates@wpgate1.wpafb.af.mil
Charles Bryson	HQ AFMC/DOF	787-5832	986-1246	bryson@wpgate1.wpafb.af.mil
Aubrey Cain	ANGRC/LGSW	858-8464	858-4709	a=cain%lgs%angrc@angrc.af.mil
SMSgt Mike Rugg	ANGRC/SCOM	858-8632	858-6599	m=rugg%sco%angrc@angrc.af.mil
TSgt Richard Koch	HQ AWS/SYX	576-3840	576-8359	koch@hqaws.safb.af.mil
Fred Mrasek	HQ ACC/SCYN	574-5349	574-2538	mrasekf@scynmailacc.af.mil
TSgt Russ Richardson	HQ ACC/LGSWG	574-4202	574-2206	richardr@lgsmail.acclog.af.mil
MSgt James Walker	HQ AFRES/LGSWT	497-1681	497-0731	james walker@hq_afres_lgs@robins
MSgt Mike Angley	HQ AFRES/SCMBT	497-1785	497-0868	
Capt Craig Harris	SSC/LGSPS	596-5185	596-5186	wharris@b888s2.ssc.af.mil
MSgt Lenice Ryan	HQ PACAF/LGSWS	449-3068	449-3002	ryanl@wpgate.hqpacaf.af.mil
MSgt Allen Coker	HQ PACAF/SCMBF	449-0421	448-1553	cokera@wpgate.hqpacaf.af.mil
Dave Goodrow	ESC/ALX	478-6711	478-6722	goodrowd@v3.hanscom.af.mil
Maj Robert Kincaid	HQ USAF/LGM-2	223-9836	224-1393	rkinkaid@sysp6.hq.af.mil
Lt Col Mike Brooks	HQ USAF/LGMW	227-0771	227-1338	mbrooks@sysp6.hq.af.mil
Sherry Knaub	HQ AFC4A/SYYS	576-6479	576-8682	knaub@afc4a.safb.af.mil
Larry Griffith	HQ AFC4A/SYYS	576-4932	576-8682	griffith@afc4a.safb.af.mil
SMSgt Millie Kaseeska	HQ AETC/LGSPP	487-5697	487-3988	kaseeska@sclan.aetc.af.mil
TSgt Rick Standish	HQ AFSOC/LGRSR	579-2903	579-4796	rstandis@libra.afsoc.af.mil

THIS PAGE INTENTIONALLY LEFT BLANK

WR-ALC RADAR NAVAGATION

LEAN LOGISTICS DEMONSTRATION PLAN

LEAN LOGISTICS

RADAR NAVIGATION SHOP SERVICE DEMONSTRATION PLAN

1. PURPOSE. This plan establishes actions, goals, and timelines associated with the lean logistics (LL) demonstration for avionics systems: ASQ-141, AL-101 and FD-109 (NSNs listed in Atch 1). Participants include: WR-ALC, HQ AFMC, Defense Logistics Agency, AFLMA, HQ AFRES, USAFE, PACAF, SPACE CMD, ACC, AMC, AETC, ANG, and associated bases listed in Attachment 2.

2. OBJECTIVE. The primary objective of this effort is to demonstrate the potential of the LL concept by:

a. Empowering the customer by giving the MAJCOMs mission input to the repair and distribution process.

b. Establishing lean base stock levels to be supported from a Consolidated Serviceable Inventory (CSI).

c. Decreasing transportation time by utilizing priority shipment modes to and from the depot.

d. Improving depot repair responsiveness to customers' demands.

e. Streamlining pipeline segment processes.

3. DEFINITIONS.

a. **AWP Time. (Metric, see 5j)** Elapsed time a reparable asset spends awaiting parts while in the repair cycle.

b. **Base Lean Level.** Authorized stock for storage and immediate use at the base level, as influenced by the base daily demand rate, base repair cycle time, percent of base repair, and order and ship time (O & ST) from the consolidated serviceable inventory (CSI). The base level includes AWP and awaiting maintenance assets.

c. **Base Shipment Processing Time. (Metric, see 5a)** Elapsed time from Not Reparable This Station (NRTS) turn-in to supply until shipment processing off base with express carrier.

d. **Consolidated Serviceable Inventory (CSI).** The centralized serviceable asset inventory, stored at the source of repair for rapid distribution and resupply to fill customer requirements.

e. **CSI Issue Effectiveness. (Metric, see 5q)** The percentage of time the CSI can immediately fill a customer requirement divided by the total number of customer requests.

f. **CSI Level.** The quantity of serviceable inventory maintained at the source of repair necessary to accommodate all of the user requirements. The level may fluctuate based upon use at the bases. Total quantities authorized may be fixed lower or higher based upon consumption.

g. **CSI Shipping Time. (Metric, see 5g)** Elapsed time to process item from CSI warehouse storage to express shipping.

h. **Demonstration Item Ineligible Asset Withdrawals. (Metric, see 5m)** The number of documented times ineligible assets are used.

i. **Depot Processing and Depacking Time. (Metric, see 5c)** Elapsed time for a reparable asset from receipt at depot until transfer to repair shop.

j. **Distribution and Repair in Variable Environment (DRIVE).** Math model used by the source of repair to prioritize repair and distribution of assets to the users from the source of repair or the CSI. Considers wing flying activity, asset position and aircraft availability goals as established by Air Staff. MAJCOM provides flying hours and other command related up-to-date factors to maintain priority sequences.

k. **Express Table.** A file in the Stock Control and Distribution System (SC&D) that identifies items to be issued to maintenance upon receipt in Central Receiving.

l. **Ineligible Stock.** Assets above the authorized LL levels. These assets for the purposes of the demonstration will be considered stock not usable either by the bases or the programmed depot maintenance (PDM) line unless a MICAP situation exists. These stocks are considered excess to the demonstration requirement based upon the new order and ship time and depot repair time. Ineligible reparables will be put in condition code J. Ineligible serviceables will be put under purpose code B, as directed by the item manager. Criteria for use/reporting of ineligible assets are defined in the "Concept of Operations" portion of this plan.

m. **In Place Readiness Spares Package (IRSP).** (Replaces BLSS) Spares and repair parts of RSP intended for use as base support for units that plan to operate in place during wartime using the remove, repair, and replace (RRR) concept.

n. **Inventory Levels. (Metric, see 5n)** Pre-demonstration and during demonstration inventory levels will be tracked to determine how levels are changing as a result of the implementation of a LL support system.

o. **Mobility Readiness Spares Package (MRSP).** (Replaces WRSK) An air transportable package of spares and repair parts required to sustain planned wartime or contingency operations of a weapon or support system for a specified period of time pending resupply.

p. **Order and Ship Time (O & ST)(Metric, see 5l).** The O and ST is the expected number of days between initiation of a requisition and receipt of stock by the user.

q. **Packing to CSI Time. (Metric, see 5e)** Elapsed time from repair shop turn-in of serviceable to DLA until asset is warehoused in CSI.

r. **Packing to Shipping Time. (Metric, see 5f)** Elapsed time from repair shop turn-in of serviceable to DLA for shipment to customer until asset is actually shipped.

s. **Readiness Spares Package (RSP) Level.** A level authorized to sustain planned contingency operations for a specified period of time.

t. **Reparable Item Movement Control System (RIMCS) Code.** A code that directs the disposition of unserviceable materiel to repair, storage or disposal.

u. **Reparable Transportation Time. (Metric, see 5b)** Elapsed time from shipment processing of a reparable asset to an express carrier until actual receipt of item at depot.

v. **Request-to-Fill Time. (Metric, see 5i)** Elapsed time from receipt of customer requirement at depot until the serviceable asset is received back at the base level supply.

w. **Serviceable Transportation Time. (Metric, see 5h)** Elapsed time from shipment of serviceable from depot until asset is received at base level.

x. **Shop Repair Costs. (Metric, see 5o)** Shop repair costs will be tracked on demonstration items to determine any impact resulting from the LL demonstration.

y. **Shop Repair Time. (Metric, see 5d)** The time elapsed from receipt of a reparable at the depot repair shop until the item is offered to the DLA distribution function as a serviceable asset.

z. **Smart Shop.** A WR-ALC/LYP locally developed data base used to track items through the repair process. This data base captures flow times and costs associated with the repair process.

aa. **Transaction Communication Time. (Metric, see 5k)** Elapsed time for a requirement transaction to pass system to system, from using activity supply system to depot DO35.

bb. **Transportation Costs. (Metric, see 5o)** Cost comparison will be made to determine changes in transportation costs for demonstration items resulting from utilization of premium transportation.

4. CONCEPT OF OPERATIONS:

The premise of the LL concept is that a more responsive customer support system can be sustained at less overall cost with leaner inventories by streamlining logistics processes and expediting movement at every level. The concept aspires to the notion of maintaining a CSI at the source of repair to support lean levels at the using activities. Lean levels can be achieved and maintained by using fast transportation modes from the CSI. The CSI can be maintained at a minimum level by using fast transportation modes for retrograde assets and fast flow depot repair. The figure below illustrates how the depot CSI will operate to provide rapid response under a LL support system.

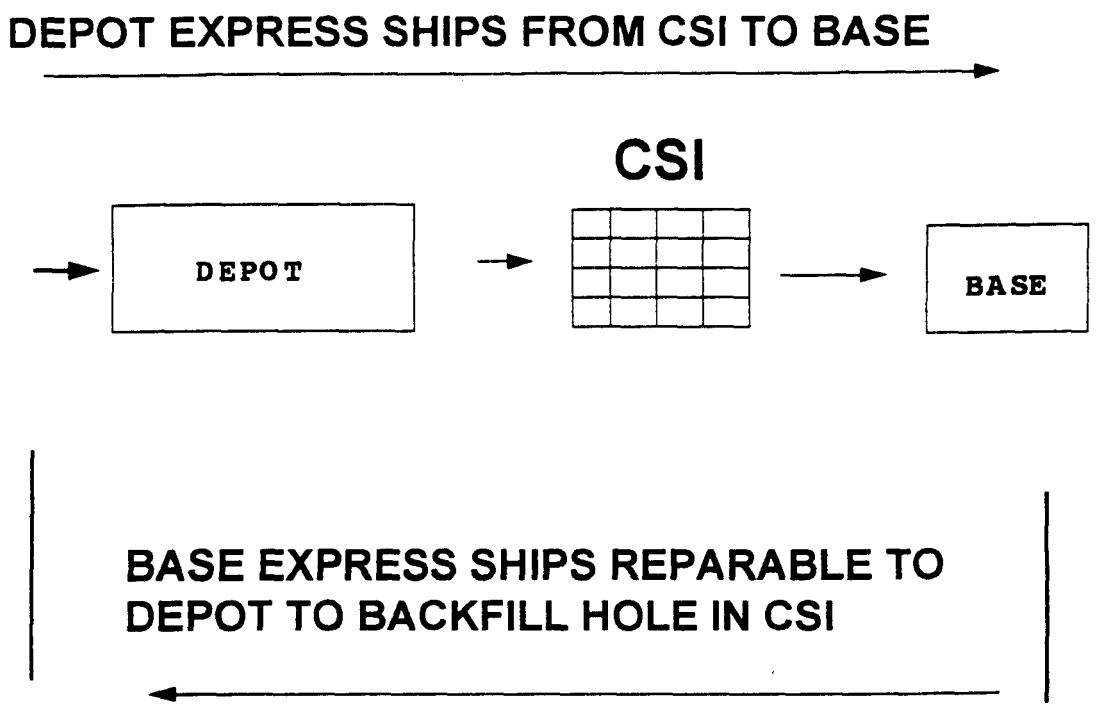

a. **Level Determination.**

(1) Base lean levels are derived from the repair cycle demand level formula found in AFM 67-1, Volume II, Part Two, Chapter 19, Attachment A-2. This formula is influenced by the base daily demand rate, base repair cycle time, percent of base repair, and O and ST from the CSI. Upon determination and coordination, lean levels will be adjusted at the using supply activity with new O & ST standards once pipeline improvements have been accomplished and verified.

(2) CSI levels are also derived from the repair cycle demand level formula found in AFM 67-1. These levels are primarily influenced by the CSI daily demand rate, and the pipeline time from the base through depot repair to the CSI along with other variables such as other service and PDM requirements. Further, a level of Shop Replaceable Units (SRUs) will be added directly to the CSI level.

(3) Ineligible stock resulting from the LL stock level determination will be stored at the depot and at operating locations. Any usage of ineligible stock will be documented and reported to the item manager as this data is critical in determining the overall success of the LL system . Ineligible assets will be used under the following circumstances:

- to fill NMCS when CSI is depleted;
- to acquire parts for AWP when deemed necessary by the item manager;
- to readjust the CSI if it is determined that the level is too lean.

b. **Reparable Asset Processing.** The success or failure of LL will be dependent upon the rapid turnaround of assets. In order to survive in a lean environment, depot and base level activities involved in maintenance, supply and transportation functions must give special attention to prompt reliable processing.

(1) Once local NRTS determination is made, maintenance activities must expedite processing of reparable items to supply. Base supply, in turn, must expedite shipment processing and offer the reparables to transportation for express shipment to the source of repair. The time standard for base level movement of a reparable from the point of NRTS turn in to transfer to express carrier is one day. Achieving this time standard will require close coordination between maintenance, supply, transportation and the express carrier.

(2) Time standards for depot reparable processing are as follows:

a. Receipt and flow to repair shop: 1 day (OPR: DLA)

b. Shop repair time: See attachment 3 (OPR: Repair Shop)

c. **Transportation.** Serviceable assets will be shipped from the depot by modes of transportation that will ensure delivery within two days to the CONUS requisitioners and within three days outside of CONUS. Reparable assets will be shipped from CONUS bases to the source of repair by modes of transportation that will ensure delivery to the depot within two days. Overseas bases will have three days for asset to reach the depot.

d. **Depot Repair.** Lean logistics demonstration assets will be expedited into the depot shop using the express table. The express table moves assets directly to the depot repair shop upon receipt. These assets are depacked prior to reaching the shop. Upon receipt of the reparable assets in the shop, they will be scheduled for repair using DRIVE. Quarterly negotiations for these items will be adjusted to reflect the actual generation of reparable assets. Line Replaceable Units (LRUs) will be expedited through the repair

process using SRU inventories located adjacent to the depot shop. Turn-ins of the repaired assets will be processed and expedited to the CSI.

e. **Distribution of Serviceable Assets.** Every requisition represents an immediate requirement for distribution of an asset from the CSI to the customer. This process will be automatic in the SC&D system unless the item manager determines the asset posture in the CSI is too depleted. At that time, a manager review code "L" will be input. Distribution then will be accomplished manually using DRIVE.

(1) The time standard for the depot is to have a serviceable asset in the hands of CONUS customers within three days of receiving the requirement (one day depot in processing plus two days transit time). The time standard for bases outside CONUS is four days (one day depot in processing plus three days transit time).

(2) Time standards for depot serviceable asset processing are as follows:

a. Repair shop to CSI: One day (OPR: DLA)

b. CSI to express carrier: One day (OPR: DLA)

c. Repair shop to express carrier: One day (OPR: DLA)

LEAN LOG PIPELINE STANDARDS

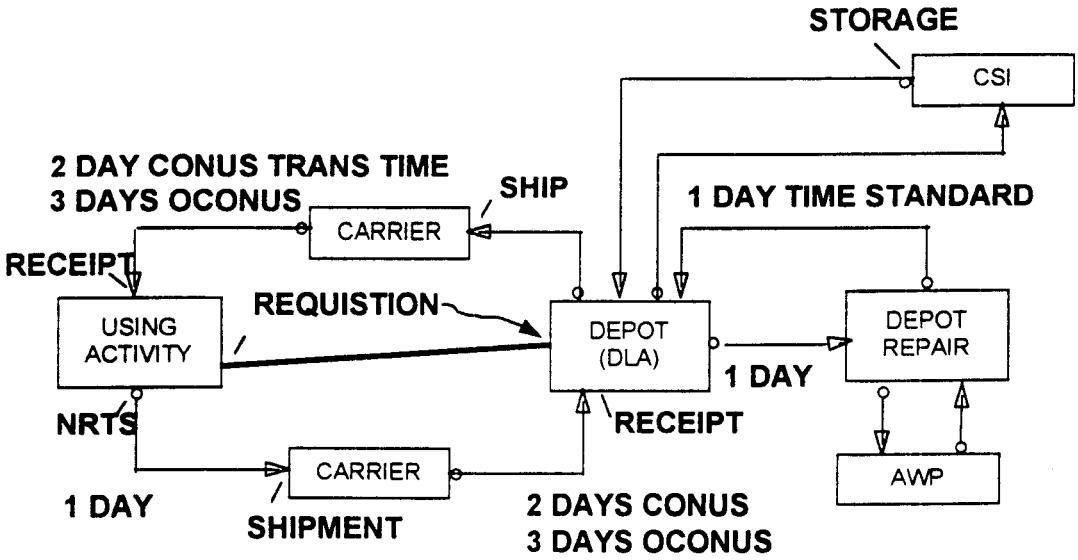

5. METRICS.

The goal of this LL demonstration is to examine our ability to operate with leaner inventory levels and still upgrade customer support via improvements in logistics support system responsiveness across the board. The focal system metric to measure the success of the LL support system will be CSI Issue Effectiveness, which is in essence the ability of the depot to fill a customer requirement with a serviceable from the CSI immediately upon demand. All other metrics are subordinate, though important, in that they will impact the ability of the overall system to maintain maximum issue effectiveness. Metrics will be managed to guard against any suboptimalization of a subordinate metric which could possibly have a detrimental effect on the system metric. Subordinate metrics will focus in on specific segments of the LL support system. These metrics will measure the responsiveness of the system, the associated costs, and help identify options and constraints toward achieving maximum performance from the system metric. The figure below is a graphic representation of the key time segments measured to track the performance of the LL system:

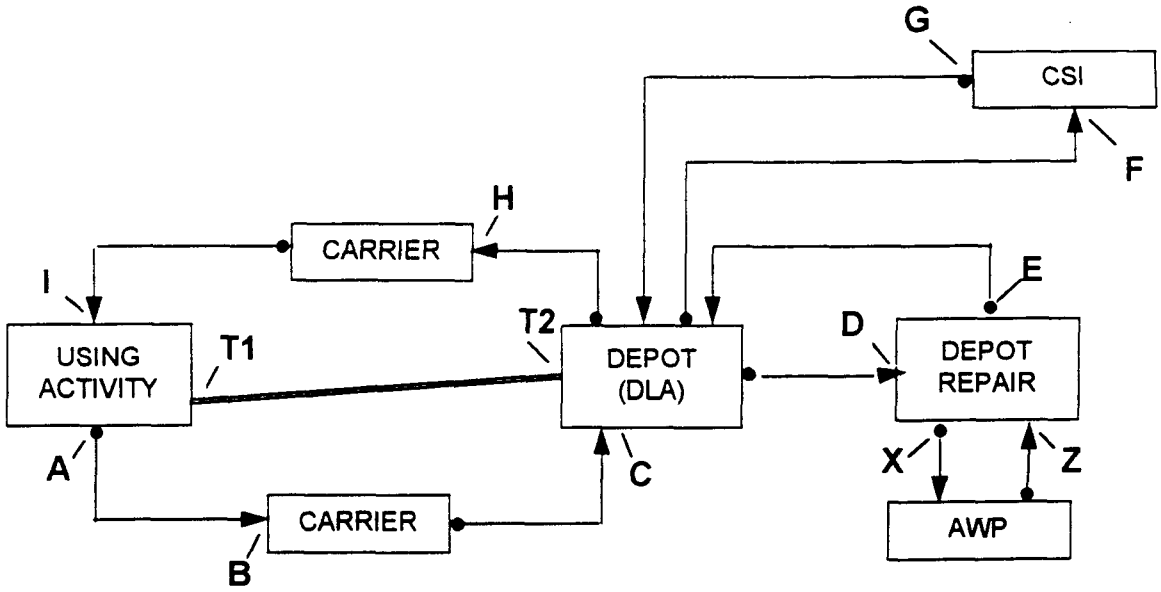

a. Base Shipment Processing Time(A to B)

b. Reparable Transportation Time(B to C)

c. Depot Processing and Depacking Time (C to D)

d. Shop Repair Time (D to E)

e. Packing/CSI Time (E to F)

f. Packing/Shipping Time (E to H)

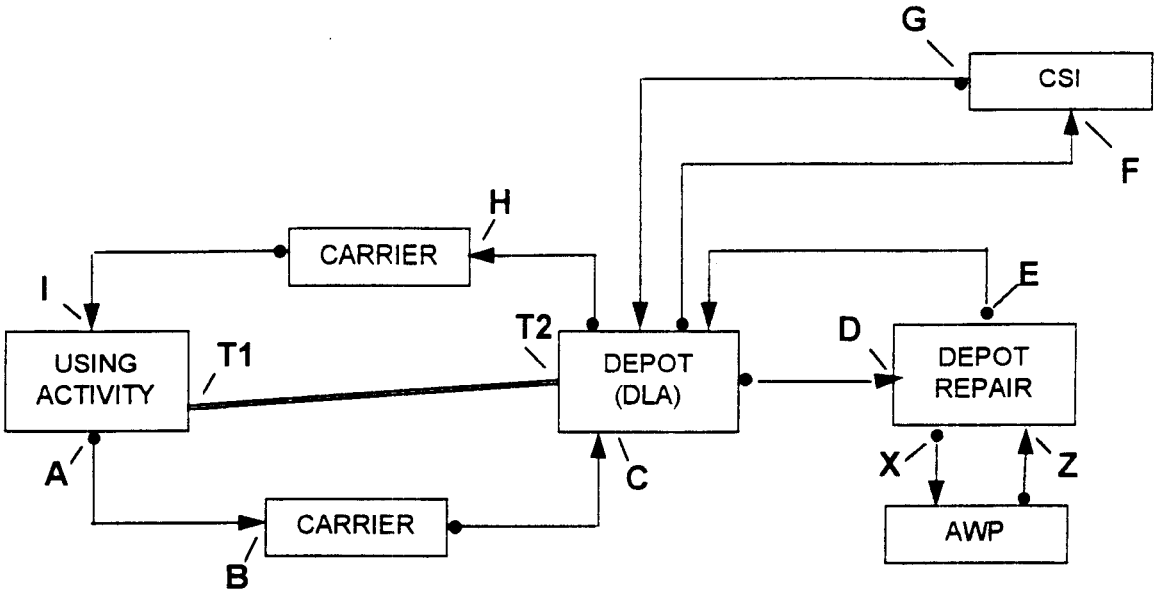

g. CSI/Shipping Time (G to H)

h. Serviceable Transportation Time (H to I)

i. Request-to-Fill Time (T2 to I)

j. AWP Time (X to Z)

k. Transaction Communication Time (T1-T2)

l. Order and Ship Time (T1 - I)

The next set of metrics focuses on cost. These metrics will help determine the ability of the LL demonstration system to achieve improved customer support at less overall cost.

m. Demonstration Item Ineligible Asset Withdrawals

n. Inventory Levels

o. Transportation Costs

p. Shop Repair Costs

The focal system metric:

q. CSI Issue Effectiveness

6. **RESPONSIBILITIES.**

a. **HQ AFMC is responsible for:**

(1) Ensuring customer coordination and participation in LL demonstration.

(2) Participating in analysis of overall demonstration results.

b. **Participating MAJCOMs will be responsible for:**

(1) Providing headquarters point of contact for networking demonstration issues/results with using activities.

(2) Coordinating overall demonstration plan.

(3) Directing subordinate using activities to implement necessary procedures and process changes to comply with provisions of LL demonstration.

(4) Regularly reviewing the following DRIVE input data for correctness and update:

a. Flying hours and availability goals for each phase.

b. Base configuration data.

c. Base failure and demand factors.

(5) General reviewing and acceptance of DRIVE input data and output results.

(6) Participating in analysis of overall demonstration results.

c. **Using Activities (see attach 2) will be responsible for:**

(1) Loading an overriding O&ST time for demonstration NSNs using FCL procedures in AFM 67-1, Vol II, Part II, Chapter 19, Pg 19-62. This action should take place once the LL system has sustained an improved pipeline response time. At regular three month intervals into the demonstration, a coordinated effort between depot and the customers will determine when new O&ST factors can be loaded to readjust levels.

(2) Following levels computation with new O&ST, place any excess or ineligible reparables in condition code J. Ultimately, ineligible reparables will receive disposition instructions from the item manager and be consolidated at depot.

(3) Loading a requisition override record to assign project code 879 for each of the demonstration NSNs per instructions in AFM 67-1, Vol II, Part II, Chap 27, Section R. Once a project code with an "8" is assigned, all demonstration NSN shipments are printed with a required delivery date (RDD) of E01. The E01 is the trigger for expedited shipping and handling of retrograde assets.

(4) Loading a shipment override record for all demonstration NSNs per instructions in AFM 67-1, Vol II, Part II, Chap 27, Section R, to establish Warner Robins ALC as the reparable destination for all demonstration items.

(5) Rapidly processing demonstration reparables from NRTS turn-in to the express carrier in one day.

(6) Ship reparables within express modes to ensure delivery to depot within two days in CONUS, and within three days OCONUS.

(7) Running RAMPS (D28) Report on a daily as opposed to weekly basis to update NRTS data.

(8) Identifying and implementing process improvements at the base level to support goals of LL demonstration.

d. **AFLMA will be responsible for:**

(1) Modeling inventory levels for base lean levels and the CSI.

(2) Developing visibility tools for the LL pipeline.

(3) Simulation and modeling of the LL effort.

(4) Making recommendations for expanded use of the LL concept.

e. **WR-ALC will be responsible for:**

(1) Analyzing the demonstration candidate items and making recommendations concerning them. (All)

(2) Baselining Request-to-Fill time. (LYL)

(3) In coordination with demonstration participants, implementing new O&ST standards on LL items as pipeline improvements are made. (LYL)

(4) Ensuring all excess or ineligible assets outside the LL levels are set aside during demonstration in proper condition code and ultimately consolidated at depot as excess reparables over and above agreed upon base levels. (LYL/DLA)

(5) Budgeting for repair based on forecasted reparable generations. (LYL/FMI)

(6) Changing Reparable Item Movement Control System (RIMCS) code to 03 on all demonstration items prior to implementation. (LYL)

(7) Ensuring demonstration items are immediately inducted to the repair line based on demand. (LYL/LYP)

(8) Ensuring items are repaired and delivered to the CSI. (All)

(9) Distributing in accordance with DRIVE when deemed necessary by the item manager. (LYL)

(10) Maintaining documentation when ineligible assets are used. (LYL)

(11) Monitoring return of reparables from bases. (LYL/FMC)

(12) Monitoring/reviewing all levels and making adjustments if necessary. (All)

(13) Tracking Request-to-Fill times on all demonstration items. (LYL)

(14) Continuing process improvements (All)

(15) Reviewing each demonstration item to determine flow times for use by AFLMA in determining the LL levels. (LYP)

(16) Staffing the designated LL shop with manpower utilizing reparable generation rates projected by the item manager and budgeted yield-per-man figures resident in the Operational Cost Base Budget for LYPGH. (LYP)

(17) Ensuring staffing of the shop is maintained at the established level for the duration of the demonstration. (LYP)

(18) Establishing and maintaining all LL demonstration NSNs on the express table for the entire period of the demonstration. (LYP)

(19) Upon receipt of a LL demonstration asset, immediately logging the NSN, serial number, date, and time of receipt in the Smart Shop data base. (LYP)

(20) Fast flowing the repair and turn-in process of LL demonstration items.(LYP)

(21) Capturing the movement of LL assets into and out of AWP status in the Smart Shop data base by logging the NSN, serial number, date and time. (LYP)

(22) Capturing the asset completion by logging the NSN, serial number, date, time, replacement parts cost, and labor cost in the Smart Shop data base. (LYP)

(23) Providing monthly reports to the designated organization(s) depicting the status of assets in process, the cost and flow time of assets completed. (LYP)

(24) Developing and implementing a program to capture times and determining processing times for the baseline and actual demonstration. (FMC)

(25) Comparing actual times and costs to baseline times and costs determining improved and/or problem areas. (FMC/DLA/LYP)

(26) Establishing levels for repair components as predetermined by repair shop. (653 ABG/LGSI)

(27) Establishing and maintaining bench stock in repair shop. (653 ABG/LGSI)

(28) Loading special project code 879 in D035K for LL demonstration. (653ABG/LGSA).

(29) Making final report and recommendations regarding LL demonstration. (ALL)

f. **DEFENSE DISTRIBUTION DEPOT - DDWG will be responsible for:**

(1) Expediting LL items from central receiving, through depack, to the depot repair shop in one day.

(2) Expediting LL items from the depot repair shop, identified by code 879, through packing and to either shipping or the warehouse for storage as part of the CSI in one day.

(3) Ensuring transportation mode is express carrier for delivery to CONUS customers within two days; and within four days to outside CONUS customers.

(4) Baseline estimated transportation and handling costs prior to LL demonstration.

(5) Tracking handling and transportation costs during demonstration.

7. **TIMELINE.** Timeline for this avionics LL demonstration is as follows:

ACTION	OPR	TIME FRAME
Complete Demonstration Plan	WR-ALC	1 Jun 94
Begin Baseline Data Collection	WR-ALC	1 Jun 94
Begin Dev of Data Visibility Tools	AFLMA/WR-ALC	1 Jun 94
Begin Customer Coordination of Demonstration	AFMC	1 Jun 94
Compute Revised Lean Levels	AFLMA	15 Jun 94
Complete Dev of Data Visibility Tools	AFLMA\WR-ALC	15 Jul 94
Demonstration Data Visibility Tools	WR-ALC	15 Jul 94
Complete Customer Coord/Finalize Plan	AFMC/WR-ALC	9 Sep 94
Finalize Data Visibility Tools for Demonstration	AFLMA/WR-ALC	15 Sep 94
Implement using activity LL plan actions	Bases	15 Sep 94
Complete establishment of CSI	WR-ALC	30 Sep 94
Complete position and storage of ineligibles	WR-ALC	30 Sep 94
Complete Baseline Data Collection	WR-ALC	30 Sep 94
Begin Avionics Lean Logistics Demonstration	WR-ALC	3 Oct 94
How Goes It Meeting	WR-ALC	3 Nov 94
How Goes It Meeting	WR-ALC	1 Dec 94
How Goes It Meeting	WR-ALC	4 Jan 95
How Goes It Meeting	WR-ALC	6 Feb 95
How Goes It Meeting	WR-ALC	6 Mar 95
End Avionics Lean Logistics Demonstration	WR-ALC	31 Mar 95
Avionics Lean Logistics Demonstration Analysis	WR-ALC/ALL	12 Apr 95

ATTACH # 1

WR-ALC LEAN LOGISTICS SERVICE DEMONSTRATION NSNs

1. 5826-00-103-1437
2. 5826-00-134-5966 (MASTER NSN: 5826-01-248-1750)
3. 5826-00-134-5967
4. 5826-00-134-5968
5. 5826-00-134-5969
6. 5826-00-134-5970
7. 5826-00-134-5972 (MASTER NSN: 5826-01-124-4793)
8. 5826-00-134-5973
9. 5826-00-134-5974
10. 5826-00-134-5975
11. 5826-00-134-5976
12. 5826-00-134-5977
13. 5826-00-134-5978
14. 5826-00-134-5979
15. 5826-00-134-5981
16. 5826-00-134-5982
17. 5826-00-134-5984
18. 5826-00-134-5985
19. 5826-00-151-4512 (MASTER NSN: 5826-00-103-1437)
20. 5826-00-444-5276
21. 5826-00-451-7243
22. 5826-00-457-0877
23. 5826-00-457-0883
24. 5826-00-457-0885
25. 5826-00-463-7158 (MASTER NSN: 5826-01-114-6047)
26. 5826-00-484-4858
27. 5826-00-484-4860
28. 5826-00-484-4864
29. 5826-00-484-4870
30. 5826-00-498-8087
31. 5826-00-498-8088
32. 5826-00-498-8105
33. 5826-00-498-8106
34. 5826-00-498-8108
35. 5826-00-498-8109
36. 5826-00-498-8120
37. 5826-00-498-8121
38. 5826-00-498-8124
39. 5826-00-498-8125
40. 5826-00-498-8126
41. 5826-00-498-8127
42. 5826-00-498-8128
43. 5826-00-733-2493
44. 5826-00-733-2588
45. 5826-00-895-9156
46. 5826-00-896-1026
47. 5826-00-922-4626
48. 5826-00-922-4629
49. 5826-00-922-4631

50. 5826-00-929-1359
51. 5826-00-929-1365
52. 5826-01-012-2184
53. 5826-01-013-0955CX (MASTER NSN: 5826-01-124-7459CX)
54. 5826-01-013-3398
55. 5826-01-014-0028
56. 5826-01-014-8642
57. 5826-01-021-2868
58. 5826-01-021-2974
59. 5826-01-032-0179
60. 5826-01-032-0379
61. 5826-01-034-9838
62. 5826-01-040-0768
63. 5826-01-048-0212
64. 5826-01-065-1213
65. 5826-01-065-9189
66. 5826-01-114-6047
67. 5826-01-124-4793
68. 5826-01-124-7459CX
69. 5826-01-162-6650
70. 5826-01-351-2143
71. 5841-01-220-1390
72. 5961-00-153-4197CX
73. 6130-00-463-7160CX
74. 6130-01-032-3966CX

ATTACH # 2 : USERS LIST FOR RADAR NAV LEAN LOG DEMO

NOTE: ANY SRAN SHOWING ESTABLISHED LEVELS FOR THE DEMONSTRATION NSNs WAS SELECTED FOR THE USERS LIST.

THE FOLLOWING SRANS ARE REPORTED AFR/ANG USERS:

FB6011	BIRMINGHAM ANG
FB6021	SKY HARBOR AZ
FB6042	ONTARIO CANADA
FB6043	PORT HUNEME CA
FB6102	SAVANNAH ANG GA
FB6121	O'HARE IAP Chicago IL
FB6142	FORBES ANG KA
FB6161	SHEWIKON KY
FB6181	BANGOR MAINE
FB6241	KEY FIELD MISS
FB6252	ROSECRANS ST. JOE
FB6271	NEBRASKA ANG
FB6291	PEASE ANGB NH
FB6302	MCGUIRE AFB NJ
FB6321	NIAGARA FALLS NY
FB6331	NORRIS FLD NC
FB6356	NO INFO AVAILABLE
FB6381	GREATER PITTSBURG ANG
FB6421	NASHVILLE TN
FB6423	SCHENETADY NJ
FB6431	HENSLEY FLD TEXAS
FB6441	SALT LAKE CITY UT
FB6471	SPOKANE WA
FB6481	KANAWHA W. VA
FB6491	GEN MITCHELL FLD
FB6501	CHEYENNE WY
FB6520	ALASKA ANCHORAGE
FB6521	EIELSON ANG
FB6530	HAWAII HICKAM FIELD
FB6562	WILL ROGERS OK
FB6605	SEN BILLY MITCHELL FLD CA
FB6618	O'HARA LFD
FB6670	NIAGARA FALLS NY
FB6703	DOBBINS AFB GA
FB6712	GREATER PITTSBURG PA

THE FOLLOWING SRANS ARE REPORTED USAFE USERS:

FB4420	RHEIN-MAIN GE
FB5518	MILDENHALL ENGLAND
FB5536	NO INFO AVAILABLE
FB5575	MORAN AB SPAIN
FB5604	RAMSTEIN AB GERMANY
FB5633	100 ARW LGS DEPLOYED
FB5685	INCIRLIK TURKEY

ATTACH # 2: USERS LIST FOR RADAR NAV LEAN LOG DEMONSTRATION

(CONTINUED)

THE FOLLOWING ARE REPORTED PACAF USERS:

FB5004	EIELSON
FB5209	YOKOTA AFB JAPAN
FB5260	HICKAM AFB HAWAII
FB5270	KADENA AFB JAPAN
FB5294	OSAN AFB KOREA
FB5400	NO INFO AVAILABLE
FB5485	NO INFO AVAILABLE

THE FOLLOWING ARE REPORTED AMC USERS:

FB4404	ANDREWS AFB
FB4600	OFFUTT AFB
FB4615	PLATTSBURG AFB
FB4621	MCCONNELL AFB
FB4626	MALESTROM AFB
FB4654	GRISSOM AFB
FB4659	GRAND FORKS AFB
FB4661	DYESS AFB
FB4664	MARCH AFB

THE FOLLOWING ARE REPORTED ACC USERS:

FB4460	LITTLE ROCK AFB AK
FB4486	LAJES FIELD AZORES
FB4488	POPE AFB NC
FB4515	KI SAWYER
FB4528	MINOT AFB
FB4600	OFFUTT AFB
FB4608	BARKSDALE AFB
FB4616	GRIFFISS AFB
FB4620	FAIRCHILD AFB
FB4661	DYESS
FB4664	MARCH AFB
FB4672	CASTLE AFB
FB4686	BEAL AFB
FB4690	ELLSWORTH
FB4701	NO INFO AVAILABLE
FB4703	NO INFO AVAILABLE
FB4810	HOWARD AFB PN
FB4814	MACDILL AFB FL

ATTACH # 2 : USERS LIST FOR RADAR NAV LEAN LOG DEMONSTRATION

(CONTINUED)

THE FOLLOWING SRANS ARE REPORTED ACC USERS (CONT FROM PREVIOUS PAGE)

FB4820	KEFLAVIK APRT ICELAND
FB4897	MOUNTAIN HOME AFB IDAHO

THE FOLLOWING SRANS ARE REPORTED AS AETC USERS:

FB3010	KEESLER AFB MISS
FB3089	RANDOLPH AFB TX
FB3300	MAXWELL AFB ALA
FB4419	ALTUS AFB

THE FOLLOWING SRANS ARE REPORTED AS AFMC USERS:

FB2027	HILL AFB UTAH
FB2029	HILL AFB UTAH
FB2037	TINKER AFB OK
FB2039	TINKER AFB OK
FB2047	McCLELLAN AFB CA
FB2049	McCLELLAN AFB CA
FB2067	ROBINS AFB GA
FB2065	ROBINS AFB GA
FB2823	EGLIN AFB FL
FB2300	WRIGHT PATTERSON AFB OH
FB2805	EDWARDS AFB CA

THE FOLLOWING SRAN IS REPORTED AS A SPACE COMMAND USER:

FB2520	NO INFO AVAILABLE

ATTACH # 3 NSN (M ITEM FIRST)	REPAIR TIME (IN HOURS)	EXPECTED SHOP REPAIR TIME (IN DAYS)	EXPECTED DEPOT CONDEMNATION RATE (0 IF BLANK)	AVERAGE VENDOR LEAD TIME (IN DAYS)	EXPECTED ANNUAL PDM DEMANDS	EXPECTED OTHER SERVICE DEMANDS
5826-00-134-5966 5826-01-248-1750		1	.01	21	20	1
5826-00-134-5967		1			0	0
5826-00-134-5968		1			7	5
5826-00-134-5969		1			0	2
5826-00-134-5970		1			7	17
5826-00-134-5972 5826-01-124-4793		2			10	12
5826-00-134-5973		1			15	0
5826-00-134-5974		1	.01	21	7	9
5826-00-134-5975		1			7	3
5826-00-134-5976		1			13	7
5826-00-134-5977		2			69	11
5826-00-134-5978		1			7	9
5826-00-134-5979		1			13	13
5826-00-134-5981		2			125	16
5826-00-134-5982		1			7	1
5826-00-134-5984		1			10	4
5826-00-134-5985		1			13	16
5826-00-151-4512 5826-00-103-1437		2			0	0
5826-00-444-5276		1			15	4
5826-00-451-7243		1			0	0
5826-00-457-0877		1			0	0
5826-00-457-0883		1			0	0
5826-00-457-0885		1			0	0
5826-00-463-7158 5826-01-114-6047		1	.01	21	0	0
5826-00-484-4858		1			0	0
5826-00-484-4860		1			0	0
5826-00-484-4864					0	0
5826-00-484-4870		1			0	0
5826-00-498-8087		1			0	0
5826-00-498-8088		1			0	0
5826-00-498-8105		1			0	0
5826-00-498-8106		1			0	0
5826-00-498-8108		1			3	0
5826-00-498-8109		1			0	0
5826-00-498-8120		1			0	0
5826-00-498-8121		1			0	0
5826-00-498-8124		1			0	0
5826-00-498-8125		1			0	0
5826-00-498-8126		1			0	0
5826-00-498-8127		1			0	0
5826-00-498-8128		1			0	0

NSN (M ITEM FIRST)	REPAIR TIME (IN HOURS)	EXPECTED SHOP REPAIR TIME (IN DAYS)	EXPECTED DEPOT CONDEMNATION RATE (0 IF BLANK)	AVERAGE VENDOR LEAD TIME (IN DAYS)	EXPECTED ANNUAL PDM DEMANDS	EXPECTED OTHER SERVICE DEMANDS
5826-00-733-2493		1			0	0
5826-00-733-2588		1	.02	21	0	0
5826-00-895-9156		1			0	0
5826-00-896-1026		1			0	0
5826-00-922-4626		1			0	0
5826-00-922-4629		1			0	0
5826-00-922-4631		1			0	0
5826-00-929-1359		1			0	0
5826-00-929-1365		1			0	0
5826-01-012-2184		1			0	0
5826-01-013-0955 5826-01-124-7459		4			0	0
5826-01-013-3398		2			0	3
5826-01-014-0028		2			5	9
5826-01-014-8642		1			0	1
5826-01-021-2868		2			0	1
5826-01-021-2974		4			0	0
5826-01-032-0179		1			0	5
5826-01-032-0379		1			0	3
5826-01-034-9838		1			0	2
5826-01-040-0768		2			0	2
5826-01-048-0212		2			0	0
5826-01-065-1213		2			0	13
5826-01-065-9189		3			0	7
5826-01-114-4793		1			0	0
5826-01-351-2143		1	.01	21	0	0
5841-01-220-1390		2			0	0
5961-00-153-4197		1			3	9
6130-00-463-7160		1			0	0
6130-01-032-3966		1			0	0

WR-ALC LEAN LOGISTICS SHOP TEST
POINT OF CONTACTS

NAME	DSN	POSITION
BEVERLY ABNEY	468-4881	WR-ALC/LNR LL TEAM CHIEF
MAJOR CAL BUTTS E-MAIL cbutts@wrdis01.robins.af.mil.	468-3474	WR- ALC/FMP/LL LL PROJECT OFFICER
SHELBY PURSER	468-3273	WR-ALC/LYLCI LL TEST IM
RON MOORING	468-2704	WR-ALC/LYPG RADAR BRANCH CHIEF
RAY THARPE	468-3642	DDWG-TS DLA SHIPMENT PLANS

THIS PAGE INTENTIONALLY LEFT BLANK

DRAFT

OKLAHOMA CITY AIR LOGISTICS CENTER LEAN LOGISTICS OXYGEN SHOP DEMONSTRATION PLAN
10 AUGUST 94

1. **PURPOSE** This plan establishes actions, goals, and timelines associated with the Lean Logistics demonstration of the OC-ALC Oxygen Shop. All items repaired in this shop are included. NSNs are listed in ATCH 1. Participants include: OC-ALC, HQ AFMC, HQ DLA, AFLMA, ACC, AETC, AFRES, AFSOC, AFSPACECOM, AMC, ANG, PACAF, and USAFE.

2. **OBJECTIVE** The primary objective of this effort is to demonstrate the tenets of the lean logistics concept.

   a. Empower the customer by giving the MAJCOMs mission input to the repair and distribution process.
   b. Establish lean base stock levels to be supported from a Consolidated Serviceable Inventory (CSI).
   c. Decrease transportation times by utilizing priority shipment modes to and from the depot.
   d. Improve depot repair responsiveness to customers' demands.
   e. Streamline the pipeline segment process.

3. **CONCEPT OF OPERATIONS** The goal of this concept is to demonstrate that a more responsive customer support system can be sustained with leaner inventories by improving logistics processes throughout the entire support cycle.

   a. **Level Determination**
      (1) Base lean levels are derived from the repair cycle demand formula found in AFM 67-1, Volume II, Chapter 19, Attachment A-2. This formula is influenced by the base daily demand rate, base repair cycle time, percent of base repair, and O&ST from the CSI.

(2) CSI levels are also derived from the repair cycle formula found in AFM 67-1. These levels are primarily influenced by the CSI daily demand rate and the pipeline time from the base through depot repair to the CSI. Other variables such as PDM, other service requirements and FMS apply also. Further, a level of Shop Replaceable Units will be added.

(3) Ineligible stock resulting from the determination of the lean levels will be stored at the depot. All usage of ineligible stock will be documented and used in demonstration analysis. Ineligible stock will be used under the following circumstances:

a. To fill NMCS when CSI is zero

b. To fill higher CSI or base lean levels if upward adjustment is necessary

b. Reparable Asset Processing.

Realizing the full potential of lean logistics is dependent upon the rapid turnaround of assets. To survive in a lean environment, depot and base level activities must give prompt attention to reliable processing.

(1) Once local NRTS determination is made, maintenance activities must expedite processing of reparable items to supply. Base supply must expedite shipment processing and offer the reparables to transportation for express shipment to the source of repair. The time standard for base level movement of reparables from the point of NRTS turn in to transfer to express carrier is one day.

(2) Time standards for depot reparable processing are as follows:

a. NRTS notification to induction: One Day

b. Shop repair time: TBD

c. Transportation.

Serviceable assets will be shipped from the depots by modes of transportation that will ensure delivery within two days to CONUS and three days to other than CONUS. Reparable assets will be shipped from CONUS bases to the source of repair (SOR) by modes of transportation that will ensure delivery to the SOR within

two days. Other than CONUS will have three days for the asset to reach the SOR.

d. **Depot Repair.**
Where unserviceable assets are available at the depot, lean logistics demonstration assets will be inducted into maintenance utilizing priority induction processes upon notification of a NRTS. Quarterly negotiations if these items will be adjusted to reflect the actual generation of reparable assets from the users. Turn-ins of the repaired asset will be processed and expedited to the CSI. If unserviceable assets are not available at the depot, the NSN will be loaded on the express table for induction as soon as an unserviceable asset arrives from a base.

e. **Distribution of Serviceable Assets.**
Every requisition represents an immediate requirement for distribution of an asset from the CSI to a customer. This process will be automatic utilizing existing systems unless the item manager determines the asset posture is too diminished. At that time, a manager review code of "L" will be input.

(1) The intent of depot is to have a serviceable asset in the hands of CONUS customers within three days of receiving the requisition and four days for customers other than CONUS.
(2) The time standards for depot serviceable asset processing are as follows:
   a. Repair shop to CSI. One day
   b. CSI to express carrier: One day
   c. Repair shop to express carrier: One day

4. METRICS

The local metric of lean logistics is Test Item Issue Effectiveness. This will highlight the ability of the depot to fill a customer requirement with a serviceable from the CSI immediately upon demand. All other metrics, while important to the overall evaluation, are subordinate to issue effectiveness. These metrics will focus on specific segments of the overall pipeline and will measure the responsiveness of the system, associated costs, and help identify options and constraints to achieving maximum performance.

5. RESPONSIBILITIES

a. **HQ AFMC**

(1) Provide guidance to all participants

(2) Obtain necessary regulatory waivers

(3) Ensure customer coordination and participation

(4) Participate in analysis of data obtained during demonstration

b. **OC-ALC**

(1) Analyze the demonstration item candidates and make recommendations concerning them. (All)

(2) Baseline Request-to-Fill time. (LII)

(3) Work to fill each demonstration item to it's agreed upon CSI level, base lean level, and authorized RSP level prior to start. (LII/LIP)

(4) Ensure all serviceable assets above the lean levels are set aside at depot prior to demonstration start. (LII)

(5) Budge for repair based on forecasted reparable generations. (LII/FMI)

(6) Change Reparable Item Movement Control System (RIMCS) code to 03 on all demonstration items prior to implementation. (LII)

(7) Ensure items are repaired and delivered to the CSI. (ALL)

(8) Maintain documentation when ineligible assets are used. (LII)

(9) Monitor return of reparables from bases. (LII/FMI)

(10) Monitor/review all levels and adjust as necessary. (ALL)

(11) Review each test item to determine flow times for use by AFLMA in determining lean levels. (LII/LIP)

(12) Capture the movement of lean logistics assets into and out of AWP status. (LIP)

c. **Participating MAJCOMs**

(1) Select headquarters point of contact for demonstrations.

(2) Coordinate overall test plan.

(3) Direct subordinate activities to implement necessary procedures and process changes to comply with porovisions of demonstration.

(4) Direct bases to run the D28 daily.

(5) Participate in analysis of overall demonstration results.

d. **Using Activities**

(1) Load an overriding O&ST time for demonstration NSNs using FCL procedured in AFM 67-1, Vol II, Chapter 19. CONUS bases use three days and OCONUS bases use four days.

(2) Load requisition override record to assign project code 879 for each test NSN per instructions in AFM 67-1, Vol, Part 3 Chapter 27.

(3) Process demonstration reparables from NRTS turn-in to the express carrier in one day.

(4) Process D28 daily.

(5) Ship reparables within express modes to ensure delivery to depot within two days in CONUS, three days outside CONUS.

(6) Requisition for replenishment only after a NRTS turn-in to base supply.

(7) Identify and implement process improvements at the base level to support the goals of lean logistics.

e. **AFLMA**

(1) Set inventory levels for base and CSI.

(2) Develop visibility tools for the demonstration.

(3) Simulate and model the systems affected by the demonstration.

(4) Make recommendations on the overall concept of lean logistics.

f. **DLA**

(1) Expedite demonstration items from the depot repair shop through packing and to shipping or the warehouse for storage in the CSI.

(2) Expedite demonstration items from the CRI to the depot repair shop.

(3) Ensure transportation mode is express carrier for delivery to CONUS customers within two days and four days to other than CONUS.

6. TIMELINE

ACTION	OPR	TIMEFRAME
Begin Baseline Data Collection	OC ALC	1 JUL 94

Begin Customer Coordination	AFMC	11 JUL 94
Begin Dev of Data Visibility Tools	AFLMA/OC-ALC	18 JUL 94
Complete Demonstration Plan	OC-ALC	1 AUG 94
Complete Dev of Data Tools	AFLMA/OC-ALC	23 AUG 94
Test Data Visibility Tools	OC-ALC	23 AUG 94
Finalize Data Visibility Tools	AFLMA/OC-ALC	2 SEP 94
Compute Lean Levels	AFLMA	9 SEP 94
Complete Customer Coord/ Finalize Demonstration Plan	AFMC/OC-ALC	9 SEP 94
Begin OC-ALC Demonstration	OC-ALC	3 OCT 94
Local Team Meetings	OC-ALC	Biweekly thru 31 Mar 95
Lean Logistics Analysis	ALL	12 APR 95

NSNs repaired in the OC-ALC Oxygen Shop ATCH 1
18 Aug 94

NSN		NOUN
1660001952729	MSN	MD1 Regulator
001691888		
002430393		
010056318		
010104949		
001323454		
001323453		
1660000714255	MSN	F4 LOX CONVERTER
001871386		
011249124		
008045803		
009552647		
008060569		
001678388		
009189092		not repaired
1660009271996	MSN	A21 REGULATOR
007824697		
001136272		
006057844		
006083245		
001337104		
1660005712238	MSN	LOX CONVERTER
009002684		
009159673		
1660005405306	MSN	LOX CONVERTER
000788227		
006329619		
006728935		
007755481		
009020543		

1660008106854	MSN	B52 LOX CONVERTER
007300150		
007382439		
007685256		
001228101		
007715381		
008784094		not repaired
1660008998380	MSN	E3 LOX CONVERTER
009123275		
000794395		
008810306		
1660005678852	MSN	F15 LOX CONVERTER
003277048		
010414494		
1660008835733	MSN	F5 LOX CONVERTER
001489239		
004459384		
000622722		
1660002381362	MSN	F15 REGULATOR
012298879		
1660001099471	MSN	100 MAN REGULATOR
009995276		not repaired
005388231		not repaired
1660001240417	MSN	F111 OXYGEN REGULATOR
008049257		not repaired
1660001796231	MSN	LOX CONVERTER
005409126		
1660005555750	MSN	LOX CONVERTER
005404645		

81 20005368084 is replacing the above two NSNs

1660004506207		LOX CONVERTER

1660009705980		DROP IN UNIT
1660000703871		OXYGEN UNIT
1660002422487	MSN	SURVIVAL KIT
004823228		not repaired
1660004870108		A14 OXYGEN REGULATOR
1660001043261		SURVIVAL KIT
1660011102548	MSN	ANTI G VALVE
000634851		not repaired
000634857		not repaired
1660009326473		REDUCER
1660001130098	MSN	VALVE, LOX CONVERTER
009248952		not repaired

USERS OF NSNs IN OC-ALC SHOP DEMONSTRATION

FB0110	HQ ACC COMBAT SUPPLY MGT/LGSWA	ATTN GAIL STRINGER
	LANGLEY AFB VA	23665-2791
FB0112	HQ AMC/LGSMSS	D226 CSMS
	SCOTT AFB IL	62225-5000
FB0114	HQ USAFE/LGSWA	UNIT 3050 BOX 105 R
	APO AE	09094 5001 4807441
FB0120	ANGRC/LGSW	3500 FETCHET AV
	ANDREWS AFB MD	20331-5157
FB0126	HQ AFMC/LGIW	4375 CHIDLAW RD STE
	WRIGHT PATTERSON AFB OH	45433-5006
FB0131	LSSI NAVSA N68520-90-C-0067	1600 E PIONEER PKWY
	ARLINGTON TX	76010-6594
FB2027	OO-ALC/TIDSCM	7512 SIXTH ST
	HILL AFB UT	84056-5105 4584337
FB2037	654 ABW/LGSWD	7330 SENTRY BLVD STE
	TINKER AFB OK	73145-9100 3392412
FB2047	SM-ALC/TIDOE	1961 ID7OREK ST
	MCCLELLAN AFB CA	95652-1620 6334019
FB2053	SA-ALC/TIDB	1101 CROCKETT RD
	KELLY AFB TX	78241-5439 9458604
FB2067	653 ABG/LGSWM	255 PERRY ST
	ROBINS AFB GA	31098-5999 4682343
FB2180	AFMC SUPPORT GROUP EUROPE	RAF UPPER HEYFORD UK
	APO AE	09466-5350
FB2300	645 SUPS/DMSC	1940 ALLGOOD AV
	WRIGHT PATTERSON AFB OH	45433-5006 7877684
FB2373	AMARC/LGSEDR	6805 E IRVINGTON RD
	DAVIS MONTHAN AFB AZ	85707-4341 3614761
FB2500	21 LSS/LGSMI (STOP 1410)	950 W OTIS ST BLDG 6
	PETERSON AFB CO	80914-1410 6924412
FB2520	RAYTHEON SERVICE CORP	330 SPACELIFT DR
	PATRICK AFB FL	32935-3217 8542052
FB2805	650 ABW/LGSPC	120 N ROSAMOND BLVD
	EDWARDS AFB CA	93524-8680 3503875
FB2823	96 SUP/LGSMDM	108 E EGLIN BLVD STE
	EGLIN AFB FL	32542 5311 8724232

FB2835 647 SPTG/LGSMDR 11 BARKSDALE ST
HANSCOM AFB MA 01731-1637 4782644
FB3010 KEESLER TECH TRNING CTR/LGSC ATTN MARY CHAPMAN
KEESLER AFB MS 39534-5000 5972506
FB3020 82 LG/LGSMD-R 22. THIRD AV
SHEPPARD AFB TX 76311-3544 7362949
FB3022 14 LS/LGSCD 42 SIXTH ST STE 5
COLUMBUS AFB MS 39710-8001 7422885
FB3029 71 LS/NW-STP/AM 273 SCOTT RD STE 122
VANCE AFB OK 73705-5511 9627379
FB3044 82 FLYING TR WING LS/LGSCD-2 ATTN W STEWART
WILLIAMS AFB AZ 85240-5350 4746729
FB3047 37 SUPS/LGSMD 2800 CRAW AV
LACKLAND AFB TX 78236-5618
FB3060 64TH LS/LGSCD 350 C ST STE 3 BLDG
REESE AFB TX 79489-5018
FB3089 12 SUPS/LGSMD-3 395 B ST W STE 1
RANDOLPH AFB TX 78150-4524 4872312
FB3099 47 LS/LGSCD 155 CALIFORNIA STE 3
LAUGHLIN AFB TX 78843-5114 7325187
FB3300 502 LSS/LGSPC BLDG 1154 455 S KELLY ST
MAXWELL AFB AL 36112 6518 4936055
FB4407 375 SUPS/LGSCDR 102 S ADAMS ST BLDG
SCOTT AFB IL 62225-5126 5762128
FB4417 HQ 1ST SP OPS WING/LGSCD 125 BENNETT AVE
HURLBURT FIELD FI 32544-5737 8727816
FB4418 437 AW/LGSMD 101 W STEWART AV
CHARLESTON AFB SC 29404-4824 6734812
FB4419 97 SUPPLY/LGSC 717 S FIRST ST
ALTUS AFB OK 73523-5110 8665500
FB4420 435 AW/LGSMD UNIT 7420 BOX 120 RII
APO AE 09097-0120 3307165
FB4425 89 SUPPLY SQ/LGSPC BLDG 3066 3066 E PERIMETER RD
ANDREWS AFB MD 20331-5010 8582522
FB4427 60TH SUPPLY SQ/LGSMC 350 HANGER AV BLDG 5
TRAVIS AFB CA 94535 2631 8373848
FB4460 314 SUPPLY/LGSMD 3601 THIRD ST
LITTLE ROCK AFB AR 72099-5017 7317573
FB4469 377 ABW/LGS 4600 RANDOLPH AV SE
KIRTLAND AFB NM 87117-5881 2449781
FB4479 62 SUPPLY SQ/LGSMD 576 E ST BLDG 1197
MCCHORD AFB WA 98438-1312 9765812

FB4484	438 MAW SUPPLY/LGSC	3101 VANDENBERG AVE
	MCGUIRE AFB NJ	08641-5103 4402880
FB4486	65 SUPS/LGSCR UNIT 8005	LAJES FIELD
	APO AE	09720-5000 7258242
FB4488	23 SUPS/SUMC	1443 RILEY RD STE A
	POPE AFB NC	28308-2898 4862711
FB4497	436 SUPPLY SQUADRON/LGSM	639 EVERUK ST
	DOVER AFB DE	19902-6639 4555568
FB4515	410 SUPS/LGSCD	520 NINTH ST SUITE 1
	K I SAWYER AFB MI	49843-3100 4722502
FB4528	5TH SUPS/LGSCD	341 BOMBER BLVD
	MINOT AFB ND	58705-5007 4536117
FB4600	55TH SUPPLY/SUMC	106 PEACEKEEPER DR
	OFFUTT AFB NE	68113-4038 2714131
FB4608	2 SUPS/LGSMC	845 LOGISTICS LN
	BARKSDALE AFB LA	71110-2417 7813152
FB4610	30TH LSS/LGSMD	306 EIGHTH ST BLDG 5
	VANDENBERG AFB CA	93437-5219 2764060
FB4613	90 SUPPLY/LGSCD	7100 SABRE RD BLDG
	F E WARREN AFB WY	82005-2670 4813669
FB4615	380 SUPPLY SQ/LGSPC	165 ARIZONA AVE BLD
	PLATTSBURGH AFB NY	12903 3324 6897112
FB4616	416 SUPS/SUOD SUITE 221	425 BROOKS RD
	GRIFFISS AFB NY	13441-4503 5877428
FB4620	92 SUPS/LGSCD	610 N DEPOT RD
	FAIRCHILD AFB WA	99011-9402 6575962
FB4621	384 SUPS/LGSMC	53057 HUTCHINSTON ST
	MCCONNELL AFB KS	67221-3622 7434815
FB4625	509 SUPPLY SQ/LGSMC	727 2ND ST STE 130
	WHITEMAN AFB MO	65305-5065 9253204
FB4626	43 SUPS/LGSMD-2	5 EIGHTEENTH ST N
	MALMSTROM AFB MT	59402-7557 6326055
FB4654	305 SUPS/LGSPC	BLDG 209
	GRISSOM AFB IN	46971-5350
FB4659	319 SUPPLY SQUADRON/LGSMC	400 EIELSON ST BLDG
	GRAND FORKS AFB ND	58205-6124
FB4661	7 SUPS/LGSP	110 THIRD ST
	DYESS AFB TX	79607-1510 4612152
FB4664	22 SUP/LGSCD-2	5770 RIVERSIDE DR BL
	MARCH AFB CA	92518-1833 9472743
FB4672	93RD SUPS/LGSCD	1360 APRON AVE
	CASTLE AFB CA	95342-5000 3472253

FB4686	9TH SUPPLY SQ/SUMC	17550 26TH ST
	BEALE AFB CA	95903-5000
FB4690	28 SUPPLY SQUADRON/SUMC	1660 TINKER DR STE 1
	ELLSWORTH AFB SD	57706-4721 6755150
FB4800	1ST SUPS/SUMC	23 SWEENEY BLVD
	LANGLEY AFB VA	23665-5350 5743837
FB4801	49 SUPPLY SQ/SUM	280 DELAWARE AV BLDG
	HOLLOMAN AFB NM	88330-7706
FB4803	363 SUPS/SUMC	321 CULLEN ST
	SHAW AFB SC	29152-5000 9652028
FB4810	24TH SUPS/SUO	UNIT 0555 HOWARD AFB
	APO AA	34001-0000
FB4814	56 SUPPLY SQ/SUOD-2	8307 CYPRESS STAND D
	MACDILL AFB FL	33621-5511 9682933
FB4819	325 SUPS/LGSMCD	659 FLORIDA AV
	TYNDALL AFB FL	32403-5000 5234673
FB4820	35 SUP/SUODR	KEFLAVIK NAS ICELAND
	APO AE	09725-2055
FB4830	347 SUPS /SUOD	4380A ALABAMA RD
	MOODY AFB GA	31669-1794 4603033
FB4833	AF CSSO/SOCR	220 SWEENEY BLVD STE
	LANGLEY AFB VA	23665-2765
FB4852	554 SUPPLY SQ/SUDR	616 DEPOT RD
	NELLIS AFB NV	89191-7222 6822959
FB4877	355 SUPS/SUMC	5165 E KACHINA ST
	DAVIS MONTHAN AFB AZ	85707-4916 3614606
FB4880	CONTROLLED	CONTROLLED
	CALL 574-3491	00000-0000
FB4887	56 SUPS/SUO	14171 W STARFIGHTER
	LUKE AFB AZ	85309-1869
FB4897	366 SUPPLY/SUPO	350 TWELFTH AV BLDG
	MT HOME AFB ID	83648-5000 8572145
FB5000	3RD SUPS/LGSDR	882 GRAPE ST BLDG 21
	ELMENDORF AFB AK	99506-5350 5522214
FB5004	354 SUPS/LGSPC	3425 WAREHOUSE CT ST
	EIELSON AFB AK	99702-2442 3775118
FB5205	432 SUPS/LGSCD	UNIT 5014 MISAWA AB
	APO AP	96319-5014 7263091
FB5209	374 SUPS/LGSPC	UNIT 5121 YOKOTA AB
	APO AP	96328-5121 2257403
FB5240	633 SUPS/LGSCD-3	UNIT 140006 ANDERSEN
	APO AP	96543-4003 3667121

FB5260 15 SUPS/LGSPC 75 A ST BLDG 1073 RM
HICKAM AFB HI 96853-5299 4493505
FB5270 18 SUPS/LGSPC UNIT 5136 KADENA AB
APO AP 96368-5130 6342508
FB5284 8 SUPS/LGSMCE UNIT 2025 KUNSAN AB
APO AP 96264-5000 7824125
FB5294 51 SUPS/LGSC UNIT 2064 OSAN AB KO
APO AP 96278 2064 7844206
FB5518 100 LC/LGSCC UNIT 4835 MILDENHALL
APO AE 09459-5305 2382280
FB5560 720 ABS/LGS UNIT 5435 FAIRFORD U
APO AE 09456-5135 2382280
FB5604 601 SUPPORT WING/LGSCDM UNIT 4120 SEMBACH AB
APO AE 09136-2075 4967318
FB5612 86 SUP/LGSCD RAMSTEIN AB GM
APO AE 09094-5000
FB5621 52 TFW/LGSPC UNIT 1115 SPANGDAHLE
APO AE 09126-3665 4526539
FB5643 10 TFW/LGSPC UNIT 5605 RAF ALCONB
APO AE 09470-5260 2232235
FB5682 31FW/LGSSC UNIT 6106 AVIANO AB
APO AE 09601-5260 6321110
FB5685 39TH SUPS/LGSMER UNIT 7085 BX 105 INC
APO AE 09824-5105 6766916
FB6221 127 FW/BASE SUPPLY/LGSCD 43200 MAPLE ST BLDG
SELFRIDGE ANGB MI 48045-5213 2735850
FX2027 OO-ALC/QL 6082 FIR AVE BLDG 12
HILL AFB UT 84056-5820
FX2318 DET 4 645 MATERIAL SQUADRON PO BOX 33 DEPT 1 582
ONTARIO CA 91761-0033
FB0015 KUSLO/AF PRGRMS UNIT 64101 KENYA
APO AE 09831-4101
FB0032 HQ AMC/LGOA AF MOBILITY SUPPORT
SCOTT AFB IL 62225-5308
FB2006 HQ AGMC/MAEIS 813 IRVING-WICK DR W
NEWARK AFB OH 43057-5149 3467841
FB2316 SUPPORT GROUP PACAF-DSE UNIT 5160 KADENA AB
APO AP 96368 5160
FB4678 42 SUPPLY SQUADRON/SUOB 7220 KANSAS RD BLDG
LORING AFB ME 04751-5000 9202592
FB5587 48 SUPS/LGSMD UNIT 512 LAKENHEATH
APO AE 09464-5260

F37048 6960 ESSG LGS SUP DIV/LGSPM 303 TRABZON STE 2
SAN ANTONIO TX 78243-7134 9772741
HQS090 AGMC/MAWS 813 IRVING-WICK DR W
NEWARK AFB OH 43057-5149

THIS LIST DOES NOT INCLUDE FMS, OTHER SERVICE, OR OTHER GOVERNMENT AGENCIES.

THIS PAGE INTENTIONALLY LEFT BLANK

OO-ALC Lean Logistics
F-16
Demonstration Plan

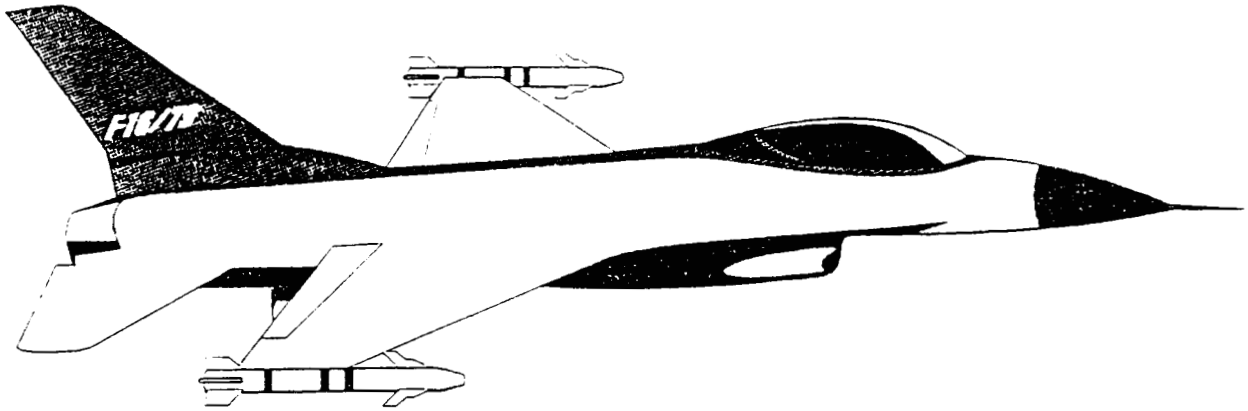

August 16 1994

Table Of Contents

Section

1. Purpose 1
2. Objective 1
3. Definitions 1
4. Concept of Operations 3
5. Pipeline Legs 5
6. Responsibilities 6
7. Metrics 8
8. Point of Contacts 14

Table 1 - NSN Listing 15

DRAFT

F-16 Lean Logistics Test Plan

1. Purpose. This plan establishes responsibilities, goals, and timelines associated with the Lean Logistics (LL) test implementation. Participants include all F-16 bases and associated MAJCOMs.

2. Objectives. The primary objective of the F-16 LL test is to realize cost savings by reducing AF stock levels using centralized stock while maintaining aircraft availability goals. Increased costs of fast transportation and repair shop procedures will be measured and considered. System robustness will be analyzed for flexibility and ease of application to a variety of stock situations. Lessons learned during Cornet Deuce will be used in the test and measurements taken to assess impact. Should the test prove centralized stock to be a valid concept, a smooth and transparent transition will be possible to implement LL at OO-ALC. Reverting back to current operations is also an easy transition in the event it is not. This test will also demonstrate that lean logistics concepts can be applied using current systems and resources. Later phases of the test will include contractor repaired items. The following lean logistics concepts will be included.

2.1 Empowering the customer by giving the MAJCOMs visibility and input to the repair and distribution decision process.

2.2 Reducing F-16 spares levels.

2.3 Streamlining base and depot processes.

2.4 Central stock of reparables and serviceables.

2.5 Fast transportation: Provides for one day delivery.

3.0 Lean Logistics Definitions.

3.1. **Awaiting Part Time (AWP)**: Elapsed time a reparable spends awaiting parts while in the repair cycle (X-Z leg figure 1).

3.2. **Base Lean Level:** Authorized stock for storage, includes AWP and AWM assets, and immediate use at the base level, as influenced by the base daily demand rate, base repair cycle time, percent of base repair, and order and ship time (OS&T) from the consolidated serviceable inventory. This level will be driven by DRIVE. Total quantities authorized may be fixed lower or higher based upon consumption.

3.3. **Consolidated Serviceable Inventory(CSI):** The centralized serviceable asset inventory, stored at the source of repair, for rapid two-day distribution to an organization where a requirement exist to fill a base or depot lean level.

3.4. **Consolidated Serviceable Inventory(CSI) Level:** The quantity of serviceable inventory maintained at the source of repair necessary to accommodate all of the user requirements. This level may fluctuate based upon use at the bases. Total quantities authorized may be fixed lower or higher based upon consumption.

3.5. **Consolidated Reparable Inventory(CRI):** Stocks maintained in an unserviceable state at the source of repair which can be inducted into repair as a base turns in an unserviceable. These stocks allow the sources of repair to reduce their required serviceable stocks in the (CSI) by a minimum of three days. The three days accounts for base handling/turn-in and the rapid transportation of the unserviceable item to the repair source. These stocks will be considered in the total pipeline requirements under lean logistics. NOTE: WR-ALC is not using a reparable inventory, instead their CSI levels will be set to include the additional stocks necessary to fill the three day handling and transportation times.

3.6. **Distribution and Repair In a Variable Environment (DRIVE):** Math model used by the source of supply/repair to prioritize repair and distribution of assets to the users from the source of repair or the consolidated serviceable inventory. Considers base flying activity, asset position and aircraft availability goals as established by the Air Staff. MAJCOM provides flying hours and other command related up-to-date to maintain priority sequences.

3.7. **Express Table:** A file in the Stock Control and Distribution System(SC&D) that identifies item to be issued to maintenance upon receipt in Central Receiving.

3.8. **Express Transportation:** An express transportation concept that expedites the flow of lean logistics items to the source of repair from the user and from the source of repair back to the user, Features could include express terminals in the dedicated support element, daily (excluding Sunday) pickup and delivery by the express carrier. This process streamlines the base evacuation process, placing reparables in transportation channels quickly.

3.9. **Ineligible Stock:** Assets above the authorized lean levels or those contained in the CSI. These assets for the purposes of the demonstration will be considered stock not usable either by the bases or the PDM line unless a MICAP situation exists. These stocks are considered excess to the demonstration requirement based upon new OS&T and depot repair times. At the depots, the item managers will place the serviceable assets in ownership purpose code "B", and unserviceable in condition code "J". The bases will also be required to identify stock at the base as excess when the total number available exceeds the authorized lean quantity.

3.10. **In-Place Readiness Spares (IRSP):** (Replaces BLSS) Spares and repair parts of RSP intended for use as base support for units that plan to operate in place during wartime using the remove and repair, and replace (RRR) concept.

3.11 **Material Tracking System (MTS)**: An OO-ALC developed bar code/scan system used in Cornet Deuce to serialize track all assets through the entire depot repair process. A bar code of the NSN and serial number is attached at central receiving. The bar code is then scanned as the asset moves through the depot repair process and the computer enters the time in the data base. PCs attached to the depot LAN feed real time data to a central VAX computer that maintains pipeline data. Pipeline segments are then monitored to determine process delays.

3.12 **Mobility Readiness Spares Packages(MRSP):** (Replaces WRSK) An air transportable package of spares and repair parts required to sustain planned wartime or contingency operations of a weapon or support system for a specified period of time pending resupply.

3.13 **Order and Ship Time (OS&T):** Represents the expected number of days between initiation of a requisition and receipt of the stock by the user(A-I leg figure 1).

3.14 **Reparable Item Movement Control System Code (RIMCS):** A code that directs the disposition of unserviceable material to repair, storage, or disposal.

4. Concept of Operations.

4.1 The F-16 lean logistics test will be accomplished in three phases. Phase 1 will be NSNs presently in the Cornet Deuce test where fast transportation and repair processing have occurred. The new DRIVE algorithm will be implemented and electronic interfaces to the MAJCOMS will be established. In the second and third phase, non-Cornet Deuce and contractor repaired NSNs will be added to the test. A full description of the three phases will be provided at 4.6. As designed, implementation of the test will minimize alterations to current systems. Metrics as outlined in section 7.0 of this plan will be maintained and analyzed to determine if our LL objectives have been met. Existing depot warehouse space will be used and with the lean logistics incentives, fast warehousing process that have been available but under-utilized will be exercised.

4.2 Base stockage will be determined by DRIVE and maintained using standard systems with a special project code using normal depot processing. Excess stock will be held centrally in the SOR depot warehouse in the IM account using normal depot processing with a special project code. This stock will be available for use as determined by DRIVE but the stock level in the depot and the bases will be recorded for analysis to determine how much stockage could be deleted from the inventory under lean logistics concepts.

4.3 The DRIVE model will be used to determine inductions of assets into the depot repair shop either through the depot express table or direct induction from the field. DRIVE will also determine whether repaired assets should be shipped to the SCI or to a base location to maximize aircraft availability.

4.4 Repair process improvements: This is not a "Repair Shop Test". Rather, this test will incorporate two level repair concepts, drive scheduling techniques and TOC/Just In Time applications into repair shops and supporting shops not currently using these techniques (or not to the extent required by Lean Logistics). By incorporating these concepts into the current LRU flow times, we expect that improvements in repair and process cycle times will be achieved. Additionally, a compatibility analysis between DRIVE scheduling techniques and DMMIS interfaces may be accomplished at the latter stages of this test as the LRU candidate subset is entered into DMMIS. Express processing of reparables and serviceables into and out of the shops will be accomplished using DRIVE criteria. Internal shop repair processes will treat the candidate subset as Just In Time (JIT) end items but will not surge them through shop process ahead of other end items. Process improvements will be accomplished using finite scheduling, small process and batch sizing, and elimination of constraints and queues. None

of these NSNs are repaired under the Depot Maintenance Management Information System (DMMIS).

4.5 Figure 1 is a graphic representation of the concept of operations.

4.6 This test will be done in three phases as described in the following paragraphs. If at any phase, the central inventory concept shows no benefit, the test can either be terminated or the new DRIVE algorithm can be replaced by the original version and the other lean logistics processes proceed. Starting dates are only approximations since the coordination and actions of several agencies are required.

4.6.1 Phase 1 will begin Oct 1994 and consist of 64 stock numbers. Phase 1 NSNs will be the F-16 two level assets in Cornet Deuce which are now under fast repair and fast transportation concepts. During Phase 1, the following implementations will occur:

4.6.1.1 The new DRIVE algorithm to incorporate central stock will be installed in the current OO-ALC DRIVE process.

4.6.1.2 The capability for the RCI and SCI will be established.

4.6.1.3 Electronic interfaces will be established between the DRIVE data base at OO-ALC and the MAJCOMs.

4.6.1.4 ACC will determine the feasibility and need to use R05 and/or R26 data as input to DRIVE.

4.6.1.5 The new DRIVE algorithm will load the depot express table for direct repair shop inductions with OO-ALC/IM and MAJCOM oversight. Retrograde LRUs not on the express table will go to the RCI under normal depot processing using the assigned project code.

4.6.1.6 The new DRIVE algorithm will determine whether to preposition or bin an asset in the SCI.

4.6.1.7 A data base is now established and is collecting base line data at OO-ALC. The data base is being loaded daily with the asset position at each base and at the depot for each NSN and each condition code. This data base will continue to collect data with the institution of the SCI and the RCI. This data will be used as a bench mark to determine stock reductions and the success of a central inventory.

4.6.2 Phase 2 will begin in Jan 1994. Twelve F-16 NSNs managed at OO-ALC by the Commodities Directorate (LI) will be added to the test. These twelve NSNs and their repair shops are not in the Cornet Deuce test and have not been scheduled by DRIVE.
4.6.3 Phase 3 will begin in Jan 1995. Four DMMIS F-16 NSNs managed at OO-ALC by the OO-ALC/LI Directorate and Four contractor repaired items will be added to the test. Terms of their incluson will be negotiated with the contractor prior to phase three. The repair of will require the interface of DRIVE and DMMIS. This phase of the test will explore DRIVE/DMMIS interface issues and expand the application of lean logistics concepts.

4.6.4 Management of LL items through the depot pipeline are similiar to established 2 Level management practices. Please refer to the F-16 Two-Level Maintenance Implementation Plan Second Edition January 1994 for specific procedures and policies.

Figure 1

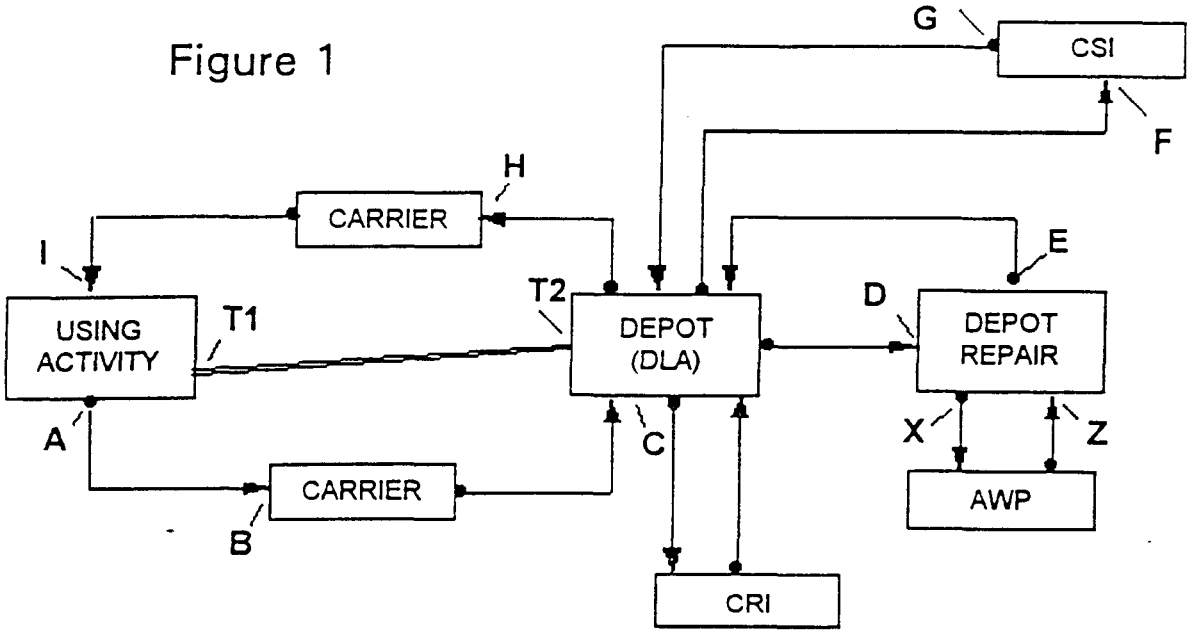

5. Pipeline legs:

A-B: Base shipment processing time. Elapsed time from Not Reparable This Station (NRTS) turn-in to supply until shipment processing off base with express carrier. Times provided by SBSS.

B-C: Reparable transit time: Elapsed time from shipment process time of a reparable asset to an express carrier until actual receipt of the item at depot. Times provided by SBSS and MTS.

C-D: Depot processing and depacking time: The time between depot receipt of the asset until the asset is received in the repair shop. Times provided by MTS.

D-E: Shop repair time: The time elapsed from receipt of a reparable at the depot repair shop until the item is offered to the DLA distribution function as a serviceable asset. AWP is a subset of this measure. Times provided by MTS

E-F: Packing to CSI time: Elapsed time from repair shop turn-in of serviceable to DLA until asset is warehoused in CSI. Times provided by MTS and DO35.

G-H: CSI shipping time: Elapsed time to process item from CSI warehouse storage to express shipping. Times provided by DO35.

H-I: Servicable transportation time: Elapsed time from shipment of serviceable from depot until asset is received at base level. Times provided by DO35.

T2-I: Request-to-fill time (Order & Ship Time): Elapsed time from receipt of customer requirement at depot until the serviceable asset is received back at the base level supply.

6.4.2 Putting the DRIVE data base on line for electronic review.

6.4.3 Making DRIVE runs to produce repair shop induction lists and distribution lists.

6.4.4 IM review of DRIVE induction and distribution list.

6.4.5 Execution of the repair and distribution of assets.

6.4.6 Measuring the performance of the depot in the repair process.

6.4.7 Maintaining a data base of daily asset positions of each test asset in the central inventories and at all bases.

6.4.8 Complete the automation of the express table and preposition interface to the Desktop Drive system.

6.4.9 Analyzing depot data collected during the test.

6.5 The Rand Corporation is responsible for:

6.5.1 Finalize the DRIVE algorithm that incorporates centralized inventory considerations.

6.5.2 Provide the software code to AFMC for incorporation into the Desktop DRIVE process.

6.5.3 Provide continued analysis support to HQ AFMC and OO-ALC for DRIVE verification and test results.

6.5.4 Provide continued analysis support to HQ AFMC and OO-ALC for overall test results.

6.6 The Dynamics Research Corporation, under HQ contract, is responsible for:

6.6.1 Inserting the new DRIVE algorithm into the current Desktop DRIVE process being used at OO-ALC using the current data feeds and output formats.

6.6.2 Assisting OO-ALC to validate the process.

6.6.3 Assist OO-ALC to develop electronic interfaces as required by this plan.

6.6.4 Assist OO-ALC to incorporate the supportability model into the DRIVE process and to streamline data feeds and model operations.

6.6.4 Assist OO-ALC to make necessary model updates and revisions to accommodate test identified deficiencies.

6.7 MAJCOMs are responsible for collecting and providing data in support of the Metrics located at 7.0.

6.4.2 Putting the DRIVE data base on line for electronic review.

6.4.3 Making DRIVE runs to produce repair shop induction lists and distribution lists.

6.4.4 IM review of DRIVE induction and distribution list.

6.4.5 Execution of the repair and distribution of assets.

6.4.6 Measuring the performance of the depot in the repair process.

6.4.7 Maintaining a data base of daily asset positions of each test asset in the central inventories and at all bases.

6.4.8 Complete the automation of the express table and preposition interface to the Desktop Drive system.

6.4.9 Analyzing depot data collected during the test.

6.5 The Rand Corporation is responsible for:

6.5.1 Finalize the DRIVE algorithm that incorporates centralized inventory considerations.

6.5.2 Provide the software code to AFMC for incorporation into the Desktop DRIVE process.

6.5.3 Provide continued analysis support to HQ AFMC and OO-ALC for DRIVE verification and test results.

6.5.4 Provide continued analysis support to HQ AFMC and OO-ALC for overall test results.

6.6 The Dynamics Research Corporation, under HQ contract, is responsible for:

6.6.1 Inserting the new DRIVE algorithm into the current Desktop DRIVE process being used at OO-ALC using the current data feeds and output formats.

6.6.2 Assisting OO-ALC to validate the process.

6.6.3 Assist OO-ALC to develop electronic interfaces as required by this plan.

6.6.4 Assist OO-ALC to incorporate the supportability model into the DRIVE process and to streamline data feeds and model operations.

6.6.4 Assist OO-ALC to make necessary model updates and revisions to accommodate test identified deficiencies.

6.7 MAJCOMs are responsible for collecting and providing data in support of the Metrics located at 7.0.

METRICS

METRIC	DEFINITION	Pipeline see Figure 1	OPR	TYPE
AWP incidents	Number of times the depot has to go AWP	EPS	ALC	Number
AWP time	Elapsed time a reparable asset spends awaiting both "F"&"G" condition parts while in the repair cycle.		ALC	TIME
Base issue effectiveness	Issue effectiveness at the base level will be a measurement indicating the fill rate based on customer demands for those items not directly issued out of the CSI, but, are issued from the customers' local base supply critical stock. The metric will indicate the percentage of time the base can immediately fill a customers requirement divided by the total number of customer requests.		Base	RATE
Base reparable evacuation time	The evacuation time is the time the reparable asset sits at the using base while awaiting processing prior to shipping the asset to the repair center. This time will be tracked by the users through the CAMS or SBSS systems. In most cases, this time should not exceed 2 days because of the required asset release after receipt of a serviceable asset.		Base	TIME
Base shipment processing time	Elapsed time from Not Reparable This Station (NRTS) turn-in to supply until shipment processing off base with express carrier.	A-B	ALC	TIME
Reparable transit time	Elapsed time from shipment process time of a reparable asset to an express carrier until actual receipt of the item at depot.	B-C	ALC	TIME
CSI Shipping Time	Elapsed time to process item from CSI warehouse storage to express shipping.	G-H	ALC	TIME

CSI issue effectiveness	Issue effectiveness is the ability of the CSI to fill a customer requirement with a serviceable asset once a demand is made. Issue effectiveness will be a measurement that compares the number of customer demands placed against the CSI against the total issue made from it. This metric will indicate the percentage of time the CSI can immediately fill a customers requirements divided by the total number of customer requirements.	Milstep DO35B FM		RATE
Depot Processing & Depacking time	The time between depot receipt of the asset until the asset is received in the repair shop.	C-D	DLA	TIME
DLA Handling costs	Handling costs will be tracked so costs associated with future transactions can be projected. In addition, cost factors will assist further analysis of transportation methods for other assets based on size, weight, etc. Cost comparisons will be made to determine the impact on DLA handling costs resulting from expedited processes.		DLA	COST
Inventory Levels	Pre-demo and during-demo inventory levels to shows how levels are changing under the Lean Logistics processing		ALC	NUMBER
MDR and PQDR incidents	Each NSN in the demo will be monitored for any MDRs and PQDRs generated against them during the conversion plan period. History of period MDRs and PQDRs will be reviewed for potential trends. Their occurrence factors will be noted and considered during CSI computations and lean level readjustments.		ALC	NUMBER
Negotiated repair vs. actual	Show DO-41 computed and negotiated requirements vs. What was actually repaired, for each stock number.	IM GO19C	ALC	Number
NMCS Hours (MICAP)	Hours of NMCS is the total hours that the NSN was out of commission. The time begins when a MICAP is generated and ends when the MICAP is satisfied. (D165B)		MAJCOM	HOUR
NMCS Incidents	Incidents of NMCS is the occurrence factor of out of commission status for a particular piece of equipment. (D165B)		MAJCOM	NUMBER
NRTS actions	Number of NRTS actions		MAJCOM	Cost Number

Number of cause code H/K NMCS	The cause code for the existence of a partial, non-mission capable, supply (MICAP) condition. The cause code and number of occurrences on each asset in NMCS will be tracked and used to analyze impacts on CSI levels.		Base MAJCOM	
Packing to CSI Time	Elapsed time from repair shop turn-in of serviceable to DLA until asset is warehoused in CSI.	E-F	DLA	TIME
Packing to Shipping Time	Elapsed time from repair shop turn-in of serviceable to DLA for shipment to customer until asset is actually shipped.	E-H (no CSI)	DLA	TIME
Request-to-fill time	Elapsed time from receipt of customer requirement at depot until the serviceable asset is received back at the base level supply.	T2-I	ALC DLA	TIME
RSP fill rate OS&T Time	The ratio or percentage that measures the ability to obtain and maintain required spare assets for RSP. The total of required stock on hand items divided by the authorized requirement is the RSP fill rate for that system.		MAJCOM	RATE
RSP issue	The number of times items have been removed from RSPs because of a MICAP situation or cannibalization is needed.		Base MAJCOM	NUMBER
Serviceable Transportation Time	Elapsed time from shipment of serviceable from depot until asset is received at base level.	H-I	ALL	TIME
Shop Repair Time	The time elapsed from receipt of a reparable at the depot repair shop until the item is offered to the DLA distribution function as a serviceable asset. AWP is a subset of this measure.	D-E	ALC	TIME
Test item cannibalization rate	The number of times cannibalization has taken place on test items. Events will be recorded for each action of cannibalization.		MAJCOM	NUMBER
Transportation costs	Cost comparison will be made to determine changes in transportation costs for test items resulting from utilization of premium transportation.		DLA	COST
Transaction Communications Time	Elapsed time for a requirement transaction to pass system to system, from using activity supply system to depot (DO35).	T1-T2	ALC	Time

8.0 OO-ALC/FMDR is the Office of Primary Responsibility for the F-16 Lean Logistics test. 'OCs for questions are:

NAME: Capt Bill Graham
OFFICE: OO-ALC/FMDR
STREET: 6090 Gum Lane
BASE: Hill AFB, UT 84056
DSN: 458-0215
EMAIL: wgraham@oodis01.hill.af.mil

NAME: Maurice Carter
OFFICE: OO-ALC/FMDR
STREET: 6090 Gum Lane
BASE: Hill AFB, UT 84056
DSN: 458-9473
EMAIL: mcarter@oodis01.hill.af.mil

NAME: Russell Kofoed
OFFICE: OO-ALC/FMDR
STREET: 6090 Gum Lane
BASE: Hill AFB, UT 84056
DSN: 924-2964
EMAIL: kofoed@oodiso1.hill.af.mil
BLLTEST3.DOC

DISTRIBUTION

AFLMA/LGS Supply Division
ATT: Lt Col Johnson
801 Ward Street
Maxwell AFB/Gunter Annex AL, 36114-3236
596-4165

HQ AETC/LGS
ATT: Col Reid
555 E Street East Suit 5
Randolf AFB TX, 78150-4440
487-5158

HQ AFRES/LGS
ATT: Col McKeever
155 Second St
Robbins AFB GA, 31098-1635
497-1659

HQ AFSPC/LGS
ATT: Col Tuggle
150 Vandenberg St Suite 1105
Peterson AFB CO, 80914-4390
692-5339

HQ PACAF/LGS
ATT: CMsgt
449-8859

HQ DLA
ATT: MMD (Maj Lawrence)
Cameron Station
Alexandria VA, 22304-6100
284-6771

HQ USAF/LGM-2
ATT: Col Zorich
1030 AF Pentagon
Washington D.C. 20330-1030
223-7756

HQ ACC/LGS
ATT: Col Gunselman
130 Douglas St, Suite 210
Langley AFB VA, 23665-2791
574-4165

HQ AFC4A/SYYS
ATT: Ms Johnson
203 W. Losey St Rm 3065
Scott AFB IL, 62225-5234
576-6479

HQ AFSOC/LGRS
ATT: Col Galente
100 Bartley St
Hurlburt Field FL, 32544
579-2347

HQ AMC/LGSW
ATT: Mr Grover
402 Scott Dr Unit 2A2
Scott AFB IL, 63335-5234
576-3118

HQ USAFE/LGS
ATT: Maj Newbold
480-7440

HQ NGB
ATT: Maj Grimes
858-8498

F-16 LEAN LOGISTICS TEST LRUs

	NSN	NOUN	REPAIR	SHOP	MDR
	1260-01-234-8689WF	EPDG	FB2029	DI	
2	1260-01-251-1150WF	EPDG	FB2029	DI	13.04
3	1270-01-042-3132WF	HUD PDU	FB2029	DI	
4	1270-01-045-3976WF	FCC	FB2029	CI	0.33
5	1270-01-070-5514WF	RDAR XTMR	FB2029	RF	
6	1270-01-093-2256WF	RDAR XMTR	FB2029	RF	11.08
7	1270-01-094-8505WF	HUD PDU	FB2029	DI	
8	1270-01-102-2962WF	LPRF	FB2029	RF	2.08
9	1270-01-102-2963WF	LPRF	FB2029	RF	1.92
10	1270-01-102-2965WF	LPRF	FB2029	RF	2.83
11	1270-01-102-2966WF	LPRF	FB2029	RF	1.83
12	1270-01-122-9955WF	HUD EU	FB2029	DI	3.88
13	1270-01-133-6494WF	DSP	FB2029	PP	3
14	1270-01-134-4451WF	PSP	FB2029	PP	
15	1270-01-141-7376WF	EFCC	FB2029	CI	
16	1270-01-165-0276WF	WAC HUD EU	FB2029	DI	
17	1270-01-189-8105WF	PSP	FB2029	PP	
18	1270-01-195-4021WF	PSP	FB2029	PP	
19	1270-01-196-3706WF	PSP	FB2029	PP	
20	1270-01-199-7430WF	HUD PDU	FB2029	DI	4.04
21	1270-01-206-7965WF	WAC HUD DU	FB2029	DI	
22	1270-01-206-7966WF	WAC HUD DU	FB2029	DI	
3	1270-01-206-7967WF	WAC HUD DU	FB2029	DI	
_4	1270-01-206-8005WF	WAC HUD EU	FB2029	DI	
25	1270-01-207-3248WF	WAC HUD DU	EZ8269		
26	1270-01-212-2990WF	DSP	FB2029	PP	
27	1270-01-212-4043WF	PSP	FB2029	PP	
28	1270-01-220-9095WF	DMT	FB2029	RF	
29	1270-01-222-1889WF	EFCC	FB2029	CI	
30	1270-01-222-3829WF	XFCC	FB2029	CI	2.42
31	1270-01-231-9800WF	PSP	FB2029	PP	9.67
32	1270-01-233-0011WF	MLPRF	FB2029	RF	19.62
33	1270-01-235-2370WF	EFCC	FB2029	CI	5.04
34	1270-01-238-3662WF	DMT	FB2029	RF	59.29
35	1270-01-240-0088WF	GAC	FB2029	CI	
36	1270-01-256-6538WF	PSP	FB2029	PP	8.54
37	1270-01-273-3858WF	RADC-OCU	FB2029	PP	
38	1270-01-273-3859WF	RADC-S2	FB2029	PP	0.92
39	1270-01-274-0543WF	HUD EU	FB2029	DI	
40	1270-01-309-3077WF	GAC	FB2029	CI	8.46
41	1270-01-322-5249WF	HUD EU	FB2029	DI	0.25
42	1270-01-326-4573WF	APSP	FB2029	PP	0.42
43	1270-01-330-8895WF	DO HUD EU	FB2029	DI	8.38
44	1270-01-333-3052WF	HUD EU	FB2029	RF	
45	1270-01-333-3608WF	DO HUD DU	FB2029	DI	16.08
46	1270-01-362-4867WF	WAC HUD EU	FB2029	DI	31.75
7	1270-01-377-4580WF	DO HUD EU	FB2029	DI	
48	1270-99-251-2706WF	WAC HUD DU	FB2029	DI	19.63

F-16 LEAN LOGISTICS TEST LRUs

	NSN	NOUN	REPAIR	SHOP	MDR
9	1270-99-720-7741WF	WAC HUD EU	EZ8269		
50	1270-99-736-0414WF	WAC HUD EU	EZ8269	DI	
51	1270-99-746-8161WF	DO HUD EU	EZ8269		
52	1270-99-746-8162WF	DO HUD DU	EZ8269		
53	1270-99-771-4187WF	WAC HUD DU	EZ8269		
54	1270-NCE352927WF	WAC HUD EU	FB2029	DI	
55	1270-NCE501578WF	DO HUD EU	FB2029	DI	
56	1280-01-057-3979WF	SCP	FB2029	PP	
57	1280-01-074-1103WF	SCP	FB2029	PP	
58	1280-01-098-0906WF	SCP	FB2029	PP	
59	1280-01-121-6879WF	SCP	FB2029	PP	4.67
60	1280-01-127-9141WF	MRIU	FB2029	PP	
61	1280-01-189-6232WF	CIU-S2	FB2029	PP	
62	1280-01-240-8595WF	CIU-S2	FB2029	PP	
63	1280-01-249-6040WF	MRIU	FB2029	PP	0.5
64	1280-01-262-0461WF	CIU-S2	FB2029	PP	
65	1280-01-280-4855WF	CIU-S2	FB2029	PP	2.29
66	1290-01-057-2290WF	CRIU	FB2029	PP	
67	1290-01-080-0203WF	CRIU	FB2029	PP	2.71
68	1290-01-082-9775WF	MRIU	FB2029	PP	
69	1290-01-083-8222WF	MRIU	FB2029	PP	
70	1290-01-109-1499WF	MRIU	FB2029	PP	14.83
71	1290-01-148-6286WF	ACIU	FB2029	PP	
72	1290-01-227-9260WF	ACIC	FB2029	PP	4.71
73	1290-01-240-3376WF	ECIU	FB2029	PP	
74	1290-01-297-8068WF	ECIU	FB2029	PP	
75	1290-01-340-6317WF	XCIU	FB2029	PP	
76	1290-01-322-3711WF	ECIU	FB2029	PP	8.67
77	1290-01-376-5449WF	ECIU	FB2029	PP	
78	5841-01-042-4721WF	REO EU	FB2029	DI	
79	5841-01-062-7215WF	REO DISP	FB2029	DI	
80	5841-01-078-9070WF	REO DISP	FB2029	DI	
81	5841-01-095-4824WF	REO EU	FB2029	DI	
82	5841-01-096-3945WF	REO DISP	FB2029	DI	3.96
83	5841-01-096-4833WF	REO EU	FB2029	DI	4.29
84	5865-01-045-0837EW	CD AMP DET	FB2065		
85	5865-01-048-9029EW	FSRS REC	FB2065		
86	5865-01-053-5396EW	TLC COUP	FB2065		
87	5865-01-080-5675EW	CD AMP DET	FB2065		
88	5865-01-107-4586EW	AZ IND	FB2065		
89	5865-01-110-6043EW	FSRS REC	FB2065		
90	5865-01-310-0163EW	SIG PROC	FB2065		
91	5865-01-324-9103EW	SIG PROC	FB2065		
92	5895-00-539-1911	IFF RT	FB20 65		
93	5895-01-112-6380	IFF RT	FB2065		
94	5895-01-142-0803WF	DTC	FB2029	CI	18.21
95	5895-01-143-5443WF	DED	FB2029	CI	5.67
96	5895-01-154-9125EW	EJ AMP DET	FD2103		

F-16 LEAN LOGISTICS TEST LRUs

	NSN	NOUN	REPAIR	SHOP	MDR
	5895-01-168-9397EW	RCVR CONT	FB2065		
98	5895-01-205-6615EW	RCVR CONT	FB2065		
99	5895-01-230-1075WF	XDEEU	FB2029	CI	3.67
100	5895-01-242-2033WF	EXDEEU	FB2029	CI	2.38
101	5895-01-248-9012WF	XDTC	FB2029	CI	4.5
102	5895-01-249-0130EW	RCVR CONT	FB2065		
103	5895-01-310-2157EW	RCVR CONT	FB2065		
104	5895-01-355-8414WF	DEU EXP	FB2029		2.75
105	5945-01-170-9363WF	ACRIU	FB2029	PP	10.79
106	5945-01-238-6899WF	ACRIU	FB2029	PP	
107	5985-01-093-2174WF	ANTENNA	FB2029	RF	
108	5985-01-146-4630WF	ANTENNA	FB2029	RF	
109	5985-01-212-2950WF	ANTENNA	FB2029	RF	24.71
110	5985-01-308-3647WF	ANTENNA	FB2029	RF	6.67
111	5985-01-309-4084WF	ANTENNA	FB2029	RF	
112	5998-01-123-0046WF	ECA	FB2029	CI	2.38
113	5998-01-148-0712WF	ECA	FB2029	CI	
114	5998-01-189-6233WF	AMRIU	FB2029	PP	31.83
115	5998-01-224-8924WF	XCIU	FB2029	PP	
116	5998-01-322-7746WF	AMRIU	FB2029	PP	3.08
117	5998-01-330-9073WF	ECA	FB2029	CI	3.75
118	5999-01-051-6308WF	J/R RIU	FB2029	PP	
9	5999-01-080-3978WF	J/R RIU	FB2029	PP	5.38
0	5999-01-089-3886WF	J/R RIU	FB2029	PP	
121	5999-99-027-0039WF	WAC HUD EU	EZ8269		3.71
122	5999-99-891-9910WF	WAC HUD EU	EZ8269	DI	
123	6605-01-042-3133WF	INU	FB2029	CI	
124	6605-01-046-3533WF	FCNP	FB2029	CI	7.08
125	6605-01-087-6645WF	INU	FB2029	CI	13.83
126	6605-01-094-4518	INU	FB2007		
127	6605-01-141-0856	INU	FB2007		
128	6605-01-141-0857	INU	FB2007		
129	6605-01-168-5185	INU	FB2007		
130	6605-01-171-2506	INU	FB2007		
131	6605-01-206-8954	INU	FB2007		
132	6605-01-231-9754	INU	FB2007		
133	6605-01-256-2380	INU	FB2007		
134	6605-99-370-8249WF	WAC HUD DU	FB2029	DI	0.79
135	6610-01-039-7817WF	ACCEL ASSY	FB2029	CI	1.25
136	6610-01-041-0555WF	CADC	FB2029	PP	
137	6610-01-089-1018WF	CADC	FB2029	PP	
138	6610-01-308-1859WF	CADC	FB2029	PP	14.58
139	6615-01-042-7834WF	RGA	FB2029	CI	2.42
140	6615-01-042-7835WF	PSA	FB2029	PP	0.79
141	6615-01-088-0618WF	FLCP	FB2029	CI	
142	6615-01-127-3160WF	FLCP	FB2029	CI	4.04
3	6615-01-141-2981WF	FLCC	FB2029	CI	
4	6615-01-149-6398WF	PSA	FB2029	PP	1.5

F-16 LEAN LOGISTICS TEST LRUs

	NSN	NOUN	REPAIR	SHOP	MDR
5	6615-01-161-1592WF	FLCC	FB2029	CI	
146	6615-01-172-0136WF	FLCC	FB2029	CI	
147	6615-01-220-3851WF	FLCC	FB2029	CI	
148	6615-01-241-3155WF	DFLCC	FB2029	CI	
149	6615-01-316-7226WF	DFLCC	FB2029	CI	
150	6615-01-324-6374WF	FLCC	FB2029	CI	2
151	6615-01-351-7337WF	DFLCC	FB2029	CI	0.71
152	6615-01-352-8570WF	FLCC	FB2029	CI	2.29
153	6615-01-356-6851WF	FLCC	FB2029	CI	2.21
154	6615-01-361-9746WF	DFLCC	FB2029	CI	16.46
155	6625-01-193-8861WF	MFD	FB2029	DI	13.33
156	7025-01-196-3702WF	DTU	FB2029	CI	10.21

SRAN	BASE	UNIT	Date/2LM	10	15	ADF	25/30	40	50	Telephone
FB2027	Hill AFB UT	388FW	10/1/93					43	21	458-4337
FB2027	Hill AFB UT	514TS	10/1/93		2		1			
2823	Eglin AFB FL	46TW	10/1/93	3	3	2	2	2	2	872-4224
488	Pope AFB NC	23 FW	10/1/93					21		486-2712
4803	Shaw AFB SC	363FW	10/1/93						54	965-3354
FB4830	Moody AFB GA	347FW	10/1/93					64		460-3033
FB4852	Nellis AFB NV	57FW	10/1/93				24	30	5	682-4881
FB4897	Mt Home AFB ID	366FW	10/1/93				9		16	857-2145
FB5004	Eielson AFB AK	354FW	10/1/93					23		317-377-2117
FB5294	Osan AB KOR	51FW	10/1/93				1	29		315-784-6607
FB5612	Ramstein AB GE	86FW	10/1/93					26		480-2070
FB5621	Spangdahlem AB GE	52FW	10/1/93						45	452-6084
FB2027	Hill AFB UT	419FW	11/1/93	2			25			458-4337
FB4887	Luke AFB AZ	56FW	11/1/93		9		76	89		853-5481
FB6675	Carswell AFB TX	301FW	2/1/94				26			739-7754
FB6648	Homestead AFB FL	482FW	3/1/94		21					
FB6652	Bergstrom AFB TX	924FG/704FS	3/1/94		19		4			685-3632
FB4887	Luke AFB AZ	944FG/302 FS	3/15/94				27			853-5481
FB5682	Aviano AB IT	31 FW	5/1/94					16		
FB6716	New Orleans NAS LA	926FG	6/1/94				25			457-8385
FB5205	Misawa AFB JA	432FW	9/1/94				52		7	315-226-3091
FB5284	Kunsan AB KOR	8FW	9/1/94				59			315-782-5723
FB3020	Sheppard AFB TX	82 WG	10/1/95	21	2	4	1	2		
FB6141	DesMoines IA	132FW	10/1/95					22		939-8419
FB6311	Kirtland AFB NM	150FG	10/1/95					25		246-7390
FB6061	Buckley Fld CO	140FW	1/1/96				26			877-9754
FB6131	Terre Haute IN Hul	181FG	1/1/96				20			724-1238
6132	Ft Wayne ID	122FW	1/1/96				22			786-1259
6142	Sioux City IA	185FG	1/1/96				21			939-6547
6355	Toledo OH	180FG	1/1/96					24		580-2034
FB6401	McEntire SC	169FG	1/1/96	15					2	583-8452
FB6411	Sioux Falls SD	114FG	1/1/96				22			939-7904
FB6461	Byrd IAP VA	192FG	1/1/96				25			864-6348
FB6492	Truax WI	128FW	1/1/96				21			273-8254
FB6032	Ft Smith AR	188FG	4/1/96		20					962-8254
FB6044	Fresno Ca	144FW	4/1/96			22				949-9113
FB6091	Jacksonville FL	125FG	4/1/96			20				460-7423
FB6122	Peoria IL	182 TASG	4/1/96			20				
FB6123	Springfield IL(Cap)	183FG	4/1/96		24					892-8254
FB6221	Selfridge MI	127FW	4/1/96	9			4			273-4507
FB6232	Duluth MN	148FG	4/1/96			20				825-7235
FB6261	Great Falls MT	120FG	4/1/96			21				279-2244
FB6303	Pleasantville NJ	177FG	4/1/96			21	1			455-6066
FB6341	Fargo ND HECTOR	119FIG	4/1/96			21				362-8356
FB6352	Springfield OH	178FG	4/1/96				26			346-2312
FB6372	Kingsley OR	142FG	4/1/96			18				830-6193
FB6432	Kelly AFB TX	149FG	4/1/96		24					945-6896
FB6433	Ellington TX	147FG	4/1/96			20				954-2703
FB6451	Burlington VT	158FG	4/1/96			3	19			220-5356
FB6540	Muniz PR	156FG	4/1/96			20				860-9146
FB6563	Tulsa OK	138FG	4/1/96					21		956-5251
FB6012	Dannely Fld AL	187FG	7/1/96	1			25			358-9399
FB6022	Tucson, AZ	162FG	7/1/96	62	4		4			924-6140
FB6324	Hancock NY SYRACUSE	174FW	7/1/96	1			24			587-9194
6511	Andrews AFB MD	113FG	7/1/96				21			858-4848
2805	Edwards AFB CA	412TW	9/1/96	16	9	4	1	5		527-8735
FB6151	McConnell AFB KS	184FG	10/1/96				40			743-7675
FB2316	Kadena JA	AFMC	DEPOT							
FB3059	Lowry AFB CO			1						
FB6221	Selfridge MI	191FG				1				Until FY 94/4

8/22/94

Annex H - Samples of Output Products from the Data Analysis System

THIS PAGE INTENTIONALLY LEFT BLANK

Document Separator

FAX COVER SHEET

HQ USAF/RTR
HQ USAF/RTT
1670 AIR FORCE PENTAGON
WASHINGTON, DC 20330-1670
DSN 225-6766 or (Comm) 703/695-6766
FAX DSN 223-9707 or (Comm) 703/693-9707

DATE: 17 MAR 95 / 1517

FROM: HQ AF/RTR
Col Mayfield

TO: Base Closure Commission

ATTN: Ann Reese

FAX #: 696-0550

NO. OF PAGES 7 + 1 COVER SHEET

REMARKS:

Ann

Here is 88-95 manpower #s. Please note these were NOT used in our BRAC 95 Analysis.

Wayne Mayfield

MANPOWER HISTORY OF AIR LOGISTICS CENTERS

CENTER	TYPE	CAT	FY88	FY89	FY90	FY91	FY92	FY93	FY94
OC-ALC	FMS	OFF	8	4	4	4	4	4	3
		ENL	0	0	0	1	1	1	0
		CIV	493	502	437	423	388	366	421
		TOT	501	506	441	428	393	371	424
OC-ALC	MAINT	OFF	45	45	45	46	46	46	45
		ENL	109	108	109	109	109	128	128
		CIV	7844	7851	7800	6070	5991	6389	6140
		TOT	7998	8004	7954	6225	6146	6563	6313
OC-ALC	MM	OFF	91	91	82	82	80	71	76
		ENL	18	18	18	57	17	17	17
		CIV	3321	3077	2922	2766	3072	2446	1954
		TOT	3430	3186	3022	2905	3169	2534	2047
OC-ALC	PK	OFF	17	17	17	15	15	13	12
		ENL	0	0	0	0	0	0	0
		CIV	561	538	473	420	409	334	268
		TOT	578	555	490	435	424	347	280
OC-ALC	MGMT	OFF	7	7	8	8	8	8	7
		ENL	11	11	11	12	12	3	3
		CIV	83	86	91	83	79	81	76
		TOT	101	104	110	103	99	92	86
OC-ALC	COMM/ COMP	OFF	2	2	2	6	9	9	8
		ENL	0	0	0	150	162	226	193
		CIV	538	517	487	507	455	424	92
		TOT	540	519	489	663	626	659	293
OC-ALC	MED	OFF	106	111	118	123	133	142	147
		ENL	253	258	277	272	271	291	320
		CIV	117	123	139	152	154	143	144
		TOT	476	492	534	547	558	576	611
OC-ALC	BOS	OFF	69	70	71	76	75	70	64
		ENL	973	1015	1039	1133	1097	885	836
		CIV	3964	3825	3554	3301	1730	1517	1382
		TOT	5006	4910	4664	4510	2902	2472	2282
OC-ALC	**TOTAL**	**OFF**	**345**	**347**	**347**	**360**	**370**	**363**	**362**
		ENL	**1364**	**1410**	**1454**	**1734**	**1669**	**1551**	**1497**
		CIV	**16921**	**16519**	**15903**	**13722**	**12278**	**11700**	**10477**
		TOT	**18630**	**18276**	**17704**	**15816**	**14317**	**13614**	**12336**

MANPOWER HISTORY OF AIR LOGISTICS CENTERS

CENTER	TYPE	CAT	FY88	FY89	FY90	FY91	FY92	FY93	FY94
OO-ALC	FMS	OFF	9	10	8	8	3	6	6
		ENL	3	3	1	1	4	4	4
		CIV	713	770	671	599	487	577	761
		TOT	725	783	680	608	494	587	771
OO-ALC	MAINT	OFF	45	47	46	45	45	27	27
		ENL	356	358	357	355	355	352	353
		CIV	6634	6553	6696	5611	5567	5427	4571
		TOT	7035	6958	7099	6011	5967	5806	4951
OO-ALC	MM	OFF	126	119	107	108	112	105	109
		ENL	106	102	102	102	112	94	65
		CIV	2392	2150	1854	1631	1583	1082	930
		TOT	2624	2371	2063	1841	1807	1281	1104
OO-ALC	PK	OFF	16	16	16	15	11	12	12
		ENL	0	0	0	0	0	0	0
		CIV	437	410	410	380	324	233	162
		TOT	453	426	426	395	335	245	174
OO-ALC	MGMT	OFF	9	10	10	10	9	8	7
		ENL	11	13	13	12	12	12	12
		CIV	67	71	77	74	67	58	55
		TOT	87	94	100	96	88	78	74
OO-ALC	COMM/ COMP	OFF	5	5	5	8	11	12	8
		ENL	0	0	0	93	99	134	101
		CIV	523	497	472	451	397	358	82
		TOT	528	502	477	552	507	504	191
OO-ALC	MED	OFF	72	81	89	90	101	98	104
		ENL	179	180	190	196	202	194	197
		CIV	87	85	97	118	136	129	128
		TOT	338	346	376	404	439	421	429
OO-ALC	BOS	OFF	73	73	71	79	81	76	74
		ENL	1066	1067	1062	1093	1053	993	948
		CIV	3504	3378	3238	3186	2228	1623	1576
		TOT	4643	4518	4371	4358	3362	2692	2598
OO-ALC	**TOTAL**	**OFF**	**356**	**361**	**352**	**363**	**373**	**344**	**347**
		ENL	**1721**	**1723**	**1725**	**1852**	**1837**	**1783**	**1680**
		CIV	**14357**	**13914**	**13516**	**12050**	**10789**	**9487**	**8265**
		TOT	**16433**	**15998**	**15592**	**14265**	**12999**	**11614**	**10292**

MANPOWER HISTORY OF AIR LOGISTICS CENTERS

CENTER	TYPE	CAT	FY88	FY89	FY90	FY91	FY92	FY93	FY94
SA-ALC	FMS	OFF	17	18	19	17	17	16	15
		ENL	0	0	0	0	0	0	0
		CIV	762	705	616	573	684	578	681
		TOT	779	723	635	590	701	594	696
SA-ALC	MAINT	OFF	43	39	38	38	37	35	35
		ENL	146	143	143	143	143	159	159
		CIV	7600	7584	7448	6660	6817	7048	5661
		TOT	7789	7766	7629	6841	6997	7242	5855
SA-ALC	MM	OFF	150	149	131	127	127	117	107
		ENL	352	352	347	320	331	347	135
		CIV	2940	2797	2519	2357	2803	2639	2174
		TOT	3442	3298	2997	2804	3261	3103	2416
SA-ALC	PK	OFF	17	17	17	16	13	13	13
		ENL	0	0	0	0	0	0	0
		CIV	646	598	586	538	492	431	373
		TOT	663	615	603	554	505	444	386
SA-ALC	MGMT	OFF	7	6	7	7	8	9	9
		ENL	12	12	12	11	11	11	11
		CIV	73	79	85	87	70	56	48
		TOT	92	97	104	105	89	76	68
SA-ALC	COMM/ COMP	OFF	4	4	4	7	8	7	5
		ENL	0	0	0	152	166	171	150
		CIV	408	392	374	431	358	278	96
		TOT	412	396	378	590	532	456	251
SA-ALC	MED	OFF	8	9	11	12	46	42	43
		ENL	20	20	19	20	104	105	110
		CIV	31	31	30	33	74	73	75
		TOT	59	60	60	65	224	220	228
SA-ALC	BOS	OFF	65	67	69	66	64	54	63
		ENL	559	568	556	527	474	466	455
		CIV	4235	4071	3976	3666	2889	1447	1400
		TOT	4859	4706	4601	4259	3427	1967	1918
SA-ALC	**TOTAL**	**OFF**	**311**	**309**	**296**	**290**	**320**	**293**	**290**
		ENL	**1089**	**1096**	**1077**	**1173**	**1229**	**1259**	**1020**
		CIV	**16695**	**16257**	**15634**	**14345**	**14187**	**12550**	**10508**
		TOT	**18095**	**17661**	**17007**	**15808**	**15736**	**14102**	**11818**

MANPOWER HISTORY OF AIR LOGISTICS CENTERS

CENTER	TYPE	CAT	FY88	FY89	FY90	FY91	FY92	FY93	FY94
SM-ALC	FMS	OFF	13	10	8	8	4	4	4
		ENL	0	0	0	0	0	0	0
		CIV	527	401	279	212	203	187	367
		TOT	540	411	287	220	207	191	371
SM-ALC	MAINT	OFF	40	40	40	40	40	40	33
		ENL	263	263	262	260	259	252	248
		CIV	6026	6035	6045	5415	5322	5354	5104
		TOT	6329	6338	6347	5715	5621	5646	5385
SM-ALC	MM	OFF	104	105	100	100	112	97	96
		ENL	90	91	93	91	153	30	29
		CIV	2283	2301	2297	2093	2421	1884	1634
		TOT	2477	2497	2490	2284	2686	2011	1759
SM-ALC	PK	OFF	16	16	16	14	11	11	11
		ENL	0	0	0	0	0	0	0
		CIV	326	333	304	280	251	174	121
		TOT	342	349	320	294	262	185	132
SM-ALC	MGMT	OFF	13	13	13	14	13	10	7
		ENL	22	22	22	22	22	12	14
		CIV	61	64	72	71	64	58	38
		TOT	96	99	107	107	99	80	59
SM-ALC	COMM/ COMP	OFF	3	3	3	11	11	26	35
		ENL	0	0	22	269	293	292	299
		CIV	477	458	443	457	356	346	157
		TOT	480	461	468	737	660	664	491
SM-ALC	MED	OFF	38	40	46	54	57	146	157
		ENL	110	109	121	124	127	346	365
		CIV	84	83	91	92	94	161	167
		TOT	232	232	258	270	278	653	689
SM-ALC	BOS	OFF	62	64	64	61	52	56	54
		ENL	738	729	700	726	662	706	714
		CIV	3249	3171	3014	1950	1478	1282	1103
		TOT	4049	3964	3778	2737	2192	2044	1871
SM-ALC	**TOTAL**	**OFF**	**289**	**291**	**290**	**302**	**300**	**390**	**397**
		ENL	**1223**	**1214**	**1220**	**1492**	**1516**	**1638**	**1669**
		CIV	**13033**	**12846**	**12545**	**10570**	**10189**	**9446**	**8691**
		TOT	**14545**	**14351**	**14055**	**12364**	**12005**	**11474**	**10757**

MANPOWER HISTORY OF AIR LOGISTICS CENTERS

CENTER	TYPE	CAT	FY88	FY89	FY90	FY91	FY92	FY93	FY94
WR-ALC	FMS	OFF	7	7	7	7	6	4	8
		ENL	0	0	0	0	0	0	0
		CIV	589	598	490	489	577	448	471
		TOT	596	605	497	496	583	452	479
WR-ALC	MAINT	OFF	39	39	39	40	37	37	37
		ENL	136	136	135	135	135	138	138
		CIV	6132	6213	6399	5913	6147	6308	6349
		TOT	6307	6388	6573	6088	6319	6483	6524
WR-ALC	MM	OFF	108	103	87	88	96	95	97
		ENL	18	18	19	20	83	38	28
		CIV	2887	2634	2286	2122	2817	2205	1730
		TOT	3013	2755	2392	2230	2996	2338	1855
WR-ALC	PK	OFF	18	18	17	17	15	15	14
		ENL	1	1	1	1	0	0	0
		CIV	575	540	515	425	386	314	234
		TOT	594	559	533	443	401	329	248
WR-ALC	MGMT	OFF	7	7	7	6	6	6	6
		ENL	4	4	3	4	4	5	5
		CIV	72	76	80	77	78	58	51
		TOT	83	87	90	87	88	69	62
WR-ALC	COMM/ COMP	OFF	6	6	6	9	9	10	8
		ENL	1	1	1	71	85	120	108
		CIV	405	389	368	351	292	240	58
		TOT	412	396	375	431	386	370	174
WR-ALC	MED	OFF	82	86	89	91	100	102	104
		ENL	181	183	189	185	194	198	207
		CIV	86	95	107	115	109	126	127
		TOT	349	364	385	391	403	426	438
WR-ALC	BOS	OFF	74	75	76	80	69	63	59
		ENL	894	895	852	880	793	726	708
		CIV	3749	3507	3159	3418	2499	1401	1367
		TOT	4717	4477	4087	4378	3361	2190	2134
WR-ALC	**TOTAL**	**OFF**	**341**	**341**	**328**	**338**	**338**	**332**	**333**
		ENL	**1235**	**1238**	**1200**	**1296**	**1294**	**1225**	**1194**
		CIV	**14495**	**14052**	**13404**	**12910**	**12905**	**11100**	**10387**
		TOT	**16071**	**15631**	**14932**	**14544**	**14537**	**12657**	**11914**

MANPOWER HISTORY OF AIR LOGISTICS CENTERS

CENTER	TYPE	CAT	FY88	FY89	FY90	FY91	FY92	FY93	FY94
TOTAL	FMS	OFF	54	49	46	44	34	34	36
		ENL	3	3	1	2	5	5	4
		CIV	3084	2976	2493	2296	2339	2156	2701
		TOT	3141	3028	2540	2342	2378	2195	2741
TOTAL	MAINT	OFF	212	210	208	209	205	185	177
		ENL	1010	1008	1006	1002	1001	1029	1026
		CIV	34236	34236	34388	29669	29844	30526	27825
		TOT	35458	35454	35602	30880	31050	31740	29028
TOTAL	MM	OFF	579	567	507	505	527	485	485
		ENL	584	581	579	590	696	526	274
		CIV	13823	12959	11878	10969	12696	10256	8422
		TOT	14986	14107	12964	12064	13919	11267	9181
TOTAL	PK	OFF	84	84	83	77	65	64	62
		ENL	1	1	1	1	0	0	0
		CIV	2545	2419	2288	2043	1862	1486	1158
		TOT	2630	2504	2372	2121	1927	1550	1220
TOTAL	MGMT	OFF	43	43	45	45	44	41	36
		ENL	60	62	61	61	61	43	45
		CIV	356	376	405	392	358	311	268
		TOT	459	481	511	498	463	395	349
TOTAL	COMM/ COMP	OFF	20	20	20	41	48	64	64
		ENL	1	1	23	735	805	943	851
		CIV	2351	2253	2144	2197	1858	1646	485
		TOT	2372	2274	2187	2973	2711	2653	1400
TOTAL	MED	OFF	306	327	353	370	437	530	555
		ENL	743	750	796	797	898	1134	1199
		CIV	405	417	464	510	567	632	641
		TOT	1454	1494	1613	1677	1902	2296	2395
TOTAL	BOS	OFF	343	349	351	362	341	319	314
		ENL	4230	4274	4209	4359	4079	3776	3661
		CIV	18701	17952	16941	15521	10824	7270	6828
		TOT	23274	22575	21601	20242	15244	11365	10803
TOTAL	ALL ALCs	OFF	1641	1649	1613	1653	1701	1722	1729
		ENL	6632	6680	6676	7547	7545	7456	7060
		CIV	75501	73588	71001	63597	60348	54283	48328
		TOT	83774	81917	79290	72797	69594	63461	57117

MANPOWER HISTORY OF AIR LOGISTICS CENTERS

CENTER	TYPE	CAT	FY88	FY89	FY90	FY91	FY92	FY93	FY94

LEGEND:

FMS: Foreign Military Sales - PECs A2XXXX, XXXXXS (including PECs below with suffix "S")

MAINT: Depot Maintenance - PECs 72007, 72207, 78211

MM: Materiel Management - PECs 71112, 78065B, 78202A, 78070 except A & C, MFP 2 not in BOS Mission Element. Includes Item Management, System Management, Engineering, Provisioning.

PK: Central Contracting - PECs 71113, 78065C, 78070C, 78202C . Excludes Base Contracting.

MGMT: Management Overhead - PEC 72829

COMM/COMP: Communications & Computers - PECs 78012, 78201B, 78202B, MFP 3 except 31XXX.

MED: Medical - PEC 877XXX

BOS: Base Operating Support (Excludes Medical). Includes Depot Supply and GDIP.

Document Separator

FAX

Date Saturday, March 18, 1995

Number of pages including cover sheet 9

TO: Col Wayne Mayfield

Phone 695-6766

Fax Phone 693-9707

FROM: Frank Cirillo/Air Force Team Leader

Defense Base Closure and Realignment Commission

1700 North Moore Street, Ste. 1425

Arlington, VA 22209

Phone 703-696-0504

Fax Phone 703-696-0550

CC:

REMARKS: ☐ Urgent ☒ For your review ☐ Reply ASAP ☐ Please Comment

'Mayfe': I attach an enhanced list which was developed as a result of meetings with Air Force staff over the past several weeks. In some cases, such as personnel #s, the requests are similar to previous requests for data but the years are expanded. The details should be worked between Ann and Ron but through this media you have a checklist as we have used for other Air Force Team requests. Suggest Ron and yourself review this in conjunction with what you already have and than have Ron give Ann a call with any questions so both lists and any previous meeting notes and commitments can merge into one document. In addition, a suggested display of authorizations and space utilized, Military Construction, and disposal history and plans is attached. I also included a sample marked up Screen 4 in regards to the one listed funding request we discussed this morning. The purpose of this latter item is to capture the total cost of operating, maintaining and altering facilities and utilities on a base that contains an ALC that contains depot maintenance activities. fc

CC
Ann Reese
Bev Borden
Dave Olson

List of information to be supplied by Air Force to Commission Cross Service

For analysis of the various fixed wing Air Force depot options/ alternatives, the Base Closure and Realignment Commission staff needs the following information on all five installations containing ALC and depot functions (Hill, McClellan, Robins, Kelly, Tinker) - some of which is history and some planned or programmed - for all functions and tenants, air Force and non-Air Force:

Based on 1995 BRAC recommendations:

- manpower authorizations that match force structure plan
- details of migration of position authorizations (military and civilian) ins and outs for each ALC function (reductions and reallocations)
- list of buildings and square footage to be disposed of or mothballed or used by others (indicate category)

Military Construction

- projects authorized and projects executed - $ value of each and description by ALC, by year 1985-1995
- projects programmed - $ value of each and description by ALC, by year 1996-2001

Base Operation Costs for Depot activities

- referring to screen 4 COBRA, request depot Industrial Fund totals for the fund total for equivalent RPMA and BOS non-payroll line for each ALC (see attached screen 4)

Personnel

- numbers of personnel for each ALC (authorizations FY 88-95 and projections 96-01)
- numbers of personnel for each ALC installation, each ALC, and each ALC major organizational component (actual on-board as of August 1994)
- numbers of personnel for each major organization within each ALC (authorizations FY 88-95)
- numbers of supervisors and numbers of "hands-on" personnel for each ALC and for each major organizational component of each ALC
- numbers of personnel at each function collocated with each ALC (i.e. DISA, DFAS, DLA...)
- authorization migration and eliminations based on downsize in place strategy (1995 BRAC recommendation)

COBRAs

- Air Force version of COBRA to close Kelly AFB
- Air Force version of COBRA to close McClellan AFB
- Air Force version of COBRA to close McClellan and Kelly AFBs
- Air Force version of COBRA to close Kelly ALC
- Air Force version of COBRA to close McClellan ALC
- Air Force version of COBRA to close McClellan and Kelly ALCs
- COBRA for each installation with an ALC for the downsize strategy (1995 BRAC recommendation)

Environment

- programmed environmental compliance costs for each ALC installation and each ALC, 1995-01
- projected environmental cleanup costs for each ALC installation and each ALC
- indicate that portion already contained in the funded program

Square footage

- total depot square footage by depot in the years 1991, 1993, 1995
- square footage to be mothballed by depot, by ALC, by installation
- square footage to be demolished by depot, by ALC, by installation
- square footage to be used by others by depot, by ALC, by installation
- documentation to show agreements to use available space by depot, by ALC, by installation
- remaining usable square footage by depot by depot, by ALC, by installation after implementation
- identify funding currently programmed to mothballed and demolished by depot, by ALC, by installation
- identify square footage currently programmed to mothballed and demolished by depot, by ALC, by installation

Workload migration

- workload movement s from each ALC by commodity in hours for the downsize in place strategy
- workload movements to each ALC by commodity in hours for the downsize in place strategy
- workload movement s from each ALC by commodity in hours for the Air Force version of close Kelly option
- workload movements to each ALC by commodity in hours for the Air Force version of close Kelly option
- workload movement s from each ALC by commodity in hours for the Air Force version close McClellan option
- workload movements to each ALC by commodity in hours for the Air Force version close McClellan option
- workload movement s from each ALC by commodity in hours for the Air Force version close McClellan and Kelly option
- workload movements to each ALC by commodity in hours for the Air Force version close McClellan and Kelly option

Data As Of 09:25 02/27/1995, Report Created 09:27 02/27/1995

Department :
Option Package :
Scenario File : C:\COBRA\THREE.CBR
Std Fctrs File : (none)

INPUT SCREEN FOUR - STATIC BASE INFORMATION

Name: HURLBURT, FL

Total Officer Employees:	989	RPMA Non-Payroll ($K/Year):	15,162
Total Enlisted Employees:	5,564	Communications ($K/Year):	1,024
Total Student Employees:	0	BOS Non-Payroll ($K/Year):	9,637
Total Civilian Employees:	482	BOS Payroll ($K/Year):	0
Mil Families Living On Base:	17.0%	Family Housing ($K/Year):	4,900
Civilians Not Willing To Move:	6.0%	Area Cost Factor:	0.73
Officer Housing Units Avail:	0	CHAMPUS In-Pat ($/Visit):	0
Enlisted Housing Units Avail:	0	CHAMPUS Out-Pat ($/Visit):	0
Total Base Facilities(KSF):	2,960	CHAMPUS Shift to Medicare:	29.0%
Officer VHA ($/Month):	84	Activity Code:	AF041
Enlisted VHA ($/Month):	57		
Per Diem Rate ($/Day):	91	Homeowner Assistance Program:	Yes
Freight Cost ($/Ton/Mile):	0.07	Unique Activity Information:	No

Name: KELLY, TX

Total Officer Employees:	825	RPMA Non-Payroll ($K/Year):	16,993
Total Enlisted Employees:	3,539	Communications ($K/Year):	3,681
Total Student Employees:	0	BOS Non-Payroll ($K/Year):	13,945
Total Civilian Employees:	14,036	BOS Payroll ($K/Year):	0
Mil Families Living On Base:	14.0%	Family Housing ($K/Year):	2,870
Civilians Not Willing To Move:	6.0%	Area Cost Factor:	0.87
Officer Housing Units Avail:	0	CHAMPUS In-Pat ($/Visit):	0
Enlisted Housing Units Avail:	0	CHAMPUS Out-Pat ($/Visit):	0
Total Base Facilities(KSF):	16,316	CHAMPUS Shift to Medicare:	20.9%
Officer VHA ($/Month):	106	Activity Code:	AF043
Enlisted VHA ($/Month):	80		
Per Diem Rate ($/Day):	97	Homeowner Assistance Program:	Yes
Freight Cost ($/Ton/Mile):	0.07	Unique Activity Information:	No

e.g.

Provide the depot industrial fund total for each equivilent area. (please advise if new numbers are already included in Screen 4 #s)

Name: KESSLER, MS

Total Officer Employees:	1,636	RPMA Non-Payroll ($K/Year):	3,731
Total Enlisted Employees:	7,717	Communications ($K/Year):	882
Total Student Employees:	0	BOS Non-Payroll ($K/Year):	18,947
Total Civilian Employees:	2,382	BOS Payroll ($K/Year):	0
Mil Families Living On Base:	43.0%	Family Housing ($K/Year):	5,139
Civilians Not Willing To Move:	6.0%	Area Cost Factor:	0.84
Officer Housing Units Avail:	0	CHAMPUS In-Pat ($/Visit):	0
Enlisted Housing Units Avail:	0	CHAMPUS Out-Pat ($/Visit):	0
Total Base Facilities(KSF):	9,223	CHAMPUS Shift to Medicare:	20.9%
Officer VHA ($/Month):	0	Activity Code:	AF042
Enlisted VHA ($/Month):	0		
Per Diem Rate ($/Day):	95	Homeowner Assistance Program:	Yes
Freight Cost ($/Ton/Mile):	0.07	Unique Activity Information:	No

Name: KIRTLAND, NM

Total Officer Employees:	1,313	RPMA Non-Payroll ($K/Year):	67
Total Enlisted Employees:	2,837	Communications ($K/Year):	883
Total Student Employees:	0	BOS Non-Payroll ($K/Year):	26,346
Total Civilian Employees:	2,331	BOS Payroll ($K/Year):	0
Mil Families Living On Base:	52.0%	Family Housing ($K/Year):	10,788
Civilians Not Willing To Move:	6.0%	Area Cost Factor:	1.02
Officer Housing Units Avail:	0	CHAMPUS In-Pat ($/Visit):	0
Enlisted Housing Units Avail:	0	CHAMPUS Out-Pat ($/Visit):	0
Total Base Facilities(KSF):	9,762	CHAMPUS Shift to Medicare:	20.9%
Officer VHA ($/Month):	147	Activity Code:	AF045
Enlisted VHA ($/Month):	83		
Per Diem Rate ($/Day):	94	Homeowner Assistance Program:	Yes
Freight Cost ($/Ton/Mile):	0.07	Unique Activity Information:	No

EXAMPLE

18 Mar 95

Details We Need,

Hill, Kelly, McClellan, Tinker, Robins?

Everyone on or off base that get support from one of 5.

• By Base

Function	Manpower Auth (PERSONNEL)		Bldgs occupied	SF Occupied (SQUARE FOOTAGE)
Two Lists	94/4	99?		
	NOW	AFTER IMPLEMENTATION		
Totals for major tenants ie Robins AFB				
ALC	9344			
Maintenance	(6253)		30	4,000,000
F-15	( )		–	–
C-141	( )		–	–
C-130	( )			
JSTARS	( )			
Avionics	( )			
EW	( )			
Gyros	( )			

Function	Auth	Bldg	SF
Product Management	3091	7	1,500,000
F-15	—	—	—
C-141	—		
C-130	Fill-In		
J STARS			
OTHER			
AVIONICS			
EW			
Gyros			

OTHER

Base Support	1500		
PFAS	138	1	20,000
DIST DEPOT (DLA)	751	10	1,000,000
DISA	318	1	50,000
78 AirBase Wing	522		
TOTALS	16,553	348	12,000,100

Construction History & Plan

85 — 01 By FUNCTION Maint, Product Mgt, AF Tenants, etc.

Description	Scope	Yr	Cost $ Mil
Maint (Complete)			
1 Maint Dock	80,000SF	94	8.0
Corrosion Cont	70,000	93	9.2
(Under Const)			
Amenities	20,000	94	3.0
Programmed (in 96 Budget 96-01)			
Engine Shop.	60,000	97	7.3
Product Mgt,			
—			
—			
AF Tenants			
—			
—			
Base Support			
—			
—			
NON AF Tenants			
—			

EXAMPLE

- Building Disposal History and Projected (prior to 1995 BRAC Recommendation)

Function	Bldg #	Scope	Yr.	Cost only if readily Avail
Maintenance				
Corrosion Cont	40,000		92	.3
Avionics Shop.			98	
[ ]				
Non AF Tenants				
Whse (DLA)			94	

- Planned As a result of 1995 BRAC Recommendation

Maintenance (Only) function	Bldg #	Scope	Yr.

EXAMPLE

Buildings to be Pickled as a result of 1995 BRAC recommendation.

Function	Bldg #	Scope	Yr.

Document Separator

BRIEFING FOR BRAC COMMISSION STAFF

BRAC 95
JOINT CROSS SERVICE GROUP TEST AND EVALUATION

27 FEB, 1995

BRIEFING OUTLINE

- Review of T&E Infrastructure
- T&E Joint Cross Service Group
- Process and Analyses
- Additional Analysis

DoD T&E INFRASTRUCTURE

- 21 major activities constitute the Major Range and Test Facility Base (MRTFB)
  - Most are T&E activities managed and operated under uniform guidelines
  - Sized, operated and maintained to support all DoD users
  - Available to other users with testing requirements

- Testing capabilities also exist at other bases
  - Non-core T&E sites

Major Range and Test Facility Base (MRTFB)

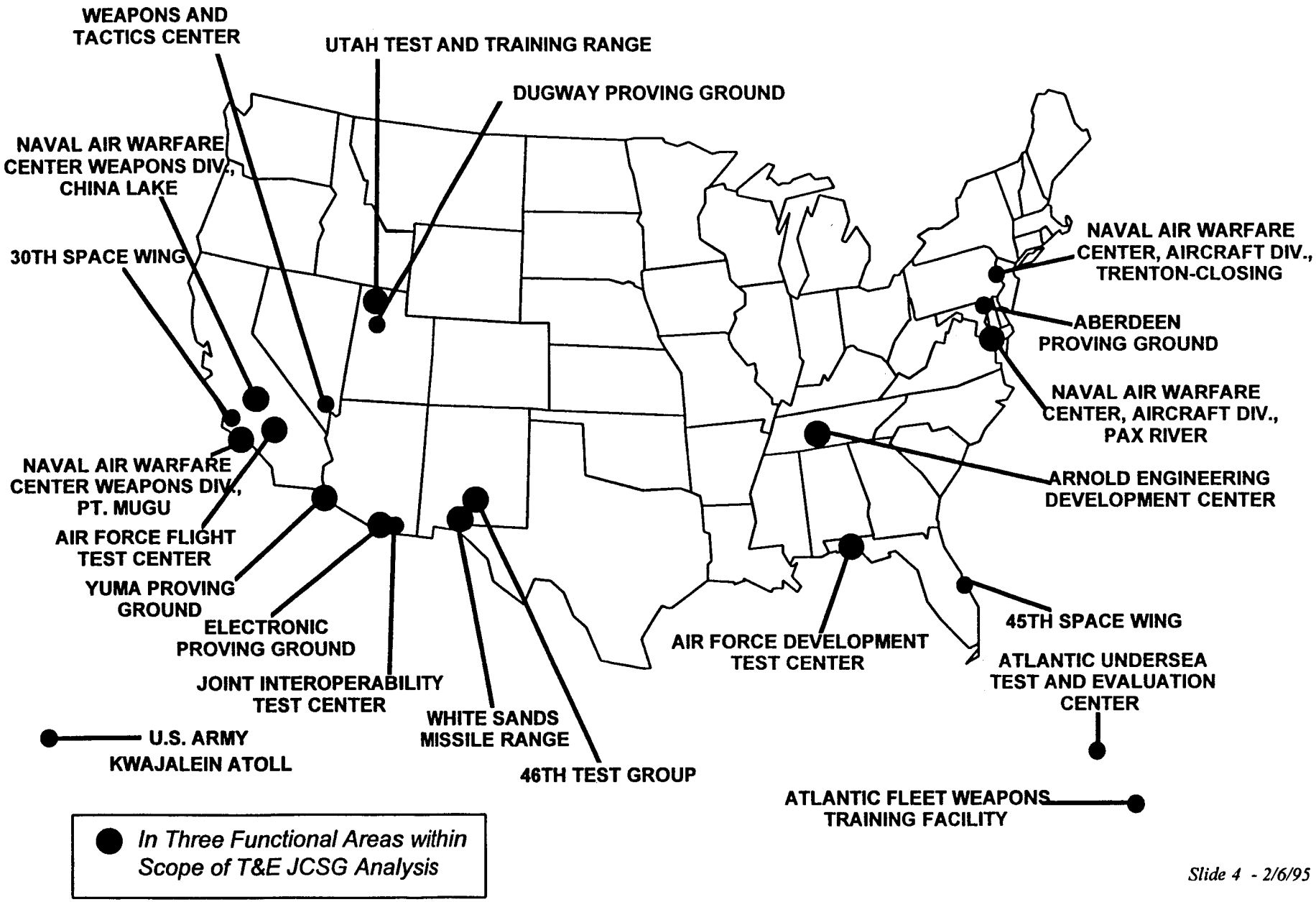

T&E INFRASTRUCTURE

- Large in Land, Sea, and Air Space
  - 7 million land acres (over 50 percent of total DoD land area)
- Costly to replace
  - Replacement value of $ 25 billion
- Active
  - Sites for several thousand test projects per year
- Activity not driven by force structure
  - T&E Infrastructure budget declined during periods of increased DoD budgets

Non-Core T&E Facilities

(in Three Functional Areas within Scope of T&E JCSG Analysis)

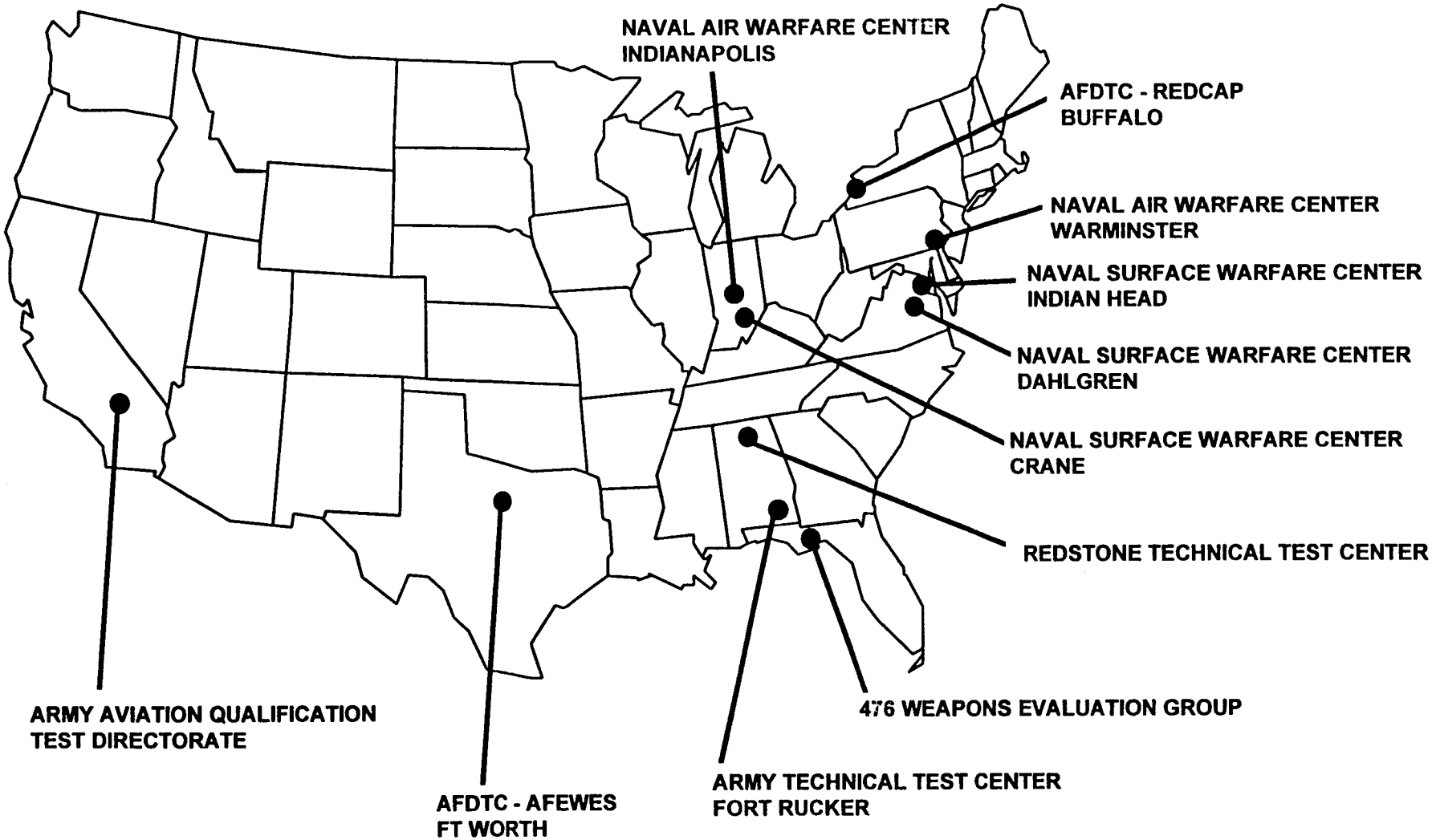

DoD TRENDS IN T&E AND RDT&E BUDGETS
SINCE FY1980

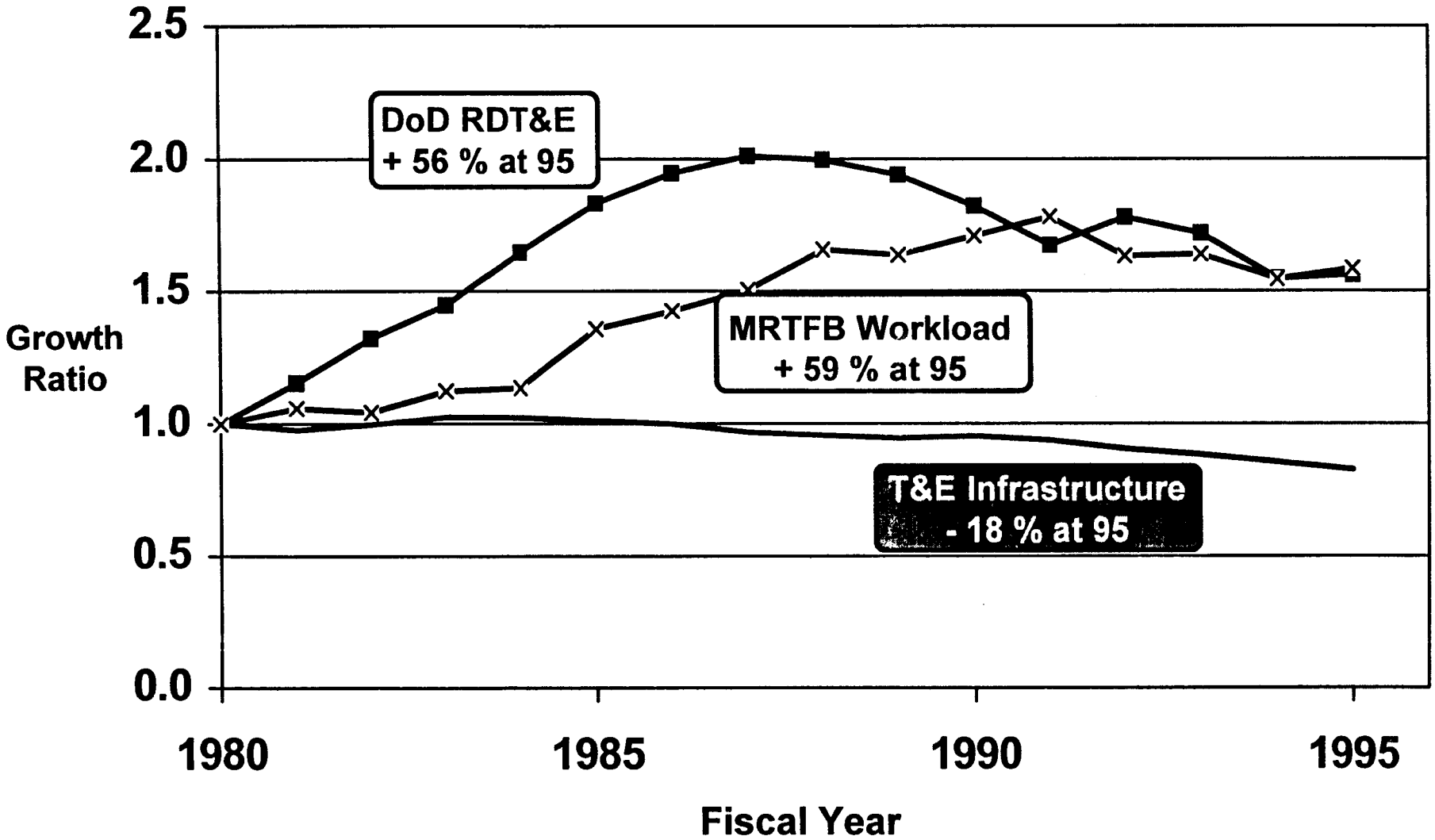

1995 COST OF T&E INFRASTRUCTURE

- T&E Infrastructure costs $ 1.7 billion
  - About 15 % of Acquisition Infrastructure
- Acquisition Infrastructure costs $ 12.2 billion
  - About 10.8 % of DoD Infrastructure

T&E Infrastructure cost is 1.5 % of DoD Infrastructure cost

T&E JOINT CROSS SERVICE GROUP

Provide guidance to Military Services and DoD Agencies for the conduct of BRAC 95 T&E Cross-Service Analysis

MEMBERSHIP

- *Co-Chairmen*: DOT&E
  OUSD(A&T), DTSE&E
- *Team Leaders*: DOT&E
  OUSD(A&T), DTSE&E
- *Members*:

Army	Navy
Air Force	DNA
BMDO	DISA
PA&E, OSD	OSD BRAC

- *Observers*: DoD Comptroller
  DoD IG
  Lab Joint Cross Service Group

AREAS SELECTED FOR ANALYSIS

- T&E Functional Areas with commonality among the Military Departments
  - Air Vehicles
  - Electronic Combat
  - Armament/Weapons (excluding surface-to-surface)
- T&E Facility Categories (TFC)
  - Digital Modeling and Simulation
  - Measurement Facilities (further subdivided)
  - Integration Laboratories
  - Hardware in the Loop
  - Installed Systems Test Facilities
  - Open Air Ranges

JCSG POLICY IMPERATIVES

- Retain irreplaceable Air, Land, and Sea space
- Retain the capability to satisfy requirements in each test facility category for each functional area, and retain critical backup capability
- Realign/consolidate capabilities, where cost effective, into existing MRTFB activities with open air ranges
- Exclude operational test agencies and dedicated training activities
- Remove from closure or realignment consideration in each functional area, those facilities/capabilities that:
  - Are Military Department unique
  - Have 5% or less of their total workload in that T&E functional area

ANALYSIS TERMINOLOGY

- Capacity - the peak annual workload (in test hours) that the test site experienced during the period FY86-FY93
- Workload - the projected workload for FY99-FY01 using outlay rates in FY95 PB (Resulted in 0.72 times average workload in FY92 and FY93)
- Excess Capacity - the capacity minus projected workload
- Functional Value
  - Physical Value - Value of the site considering air, land, sea space as well as varied topography and climates as related to T&E in real-world environments under realistic conditions
  - Technical Value - Value of the site considering man-made assets in terms of their capability to support T&E of current and future weapon systems

FUNCTIONAL VALUE FRAMEWORK

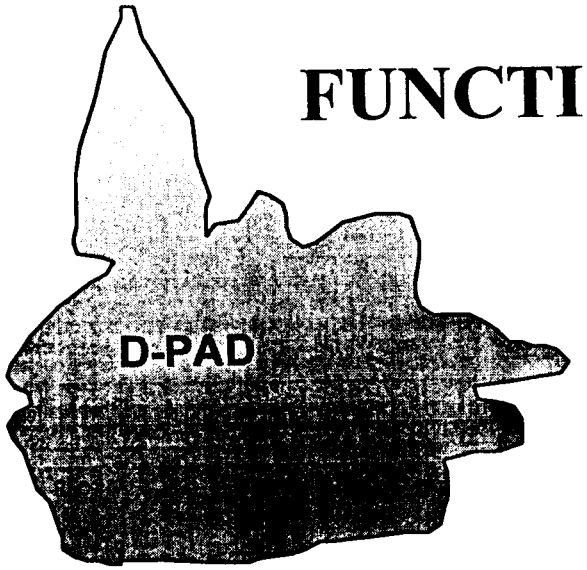

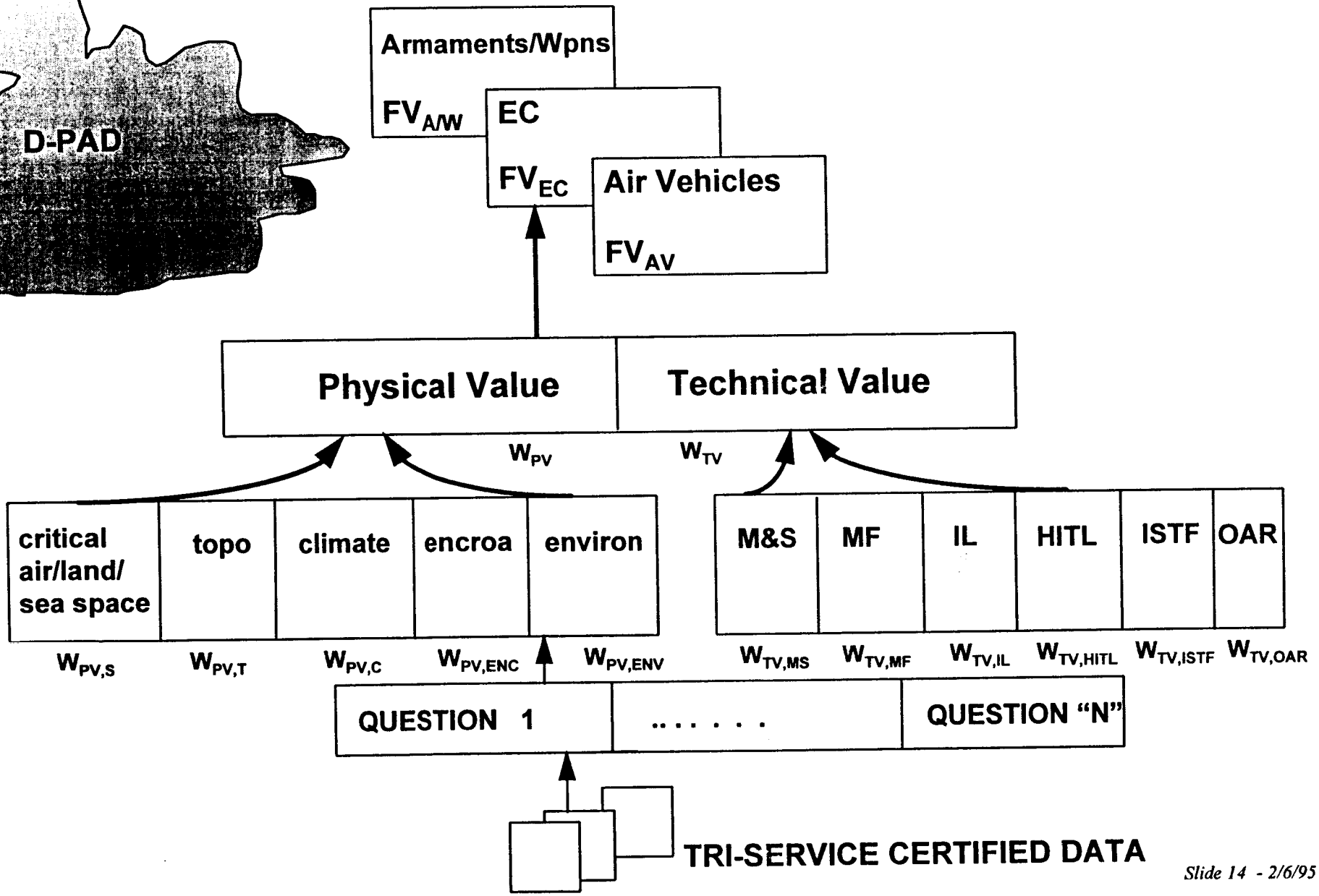

T&E JCSG FUNCTIONAL VALUE SCORING PROCESS

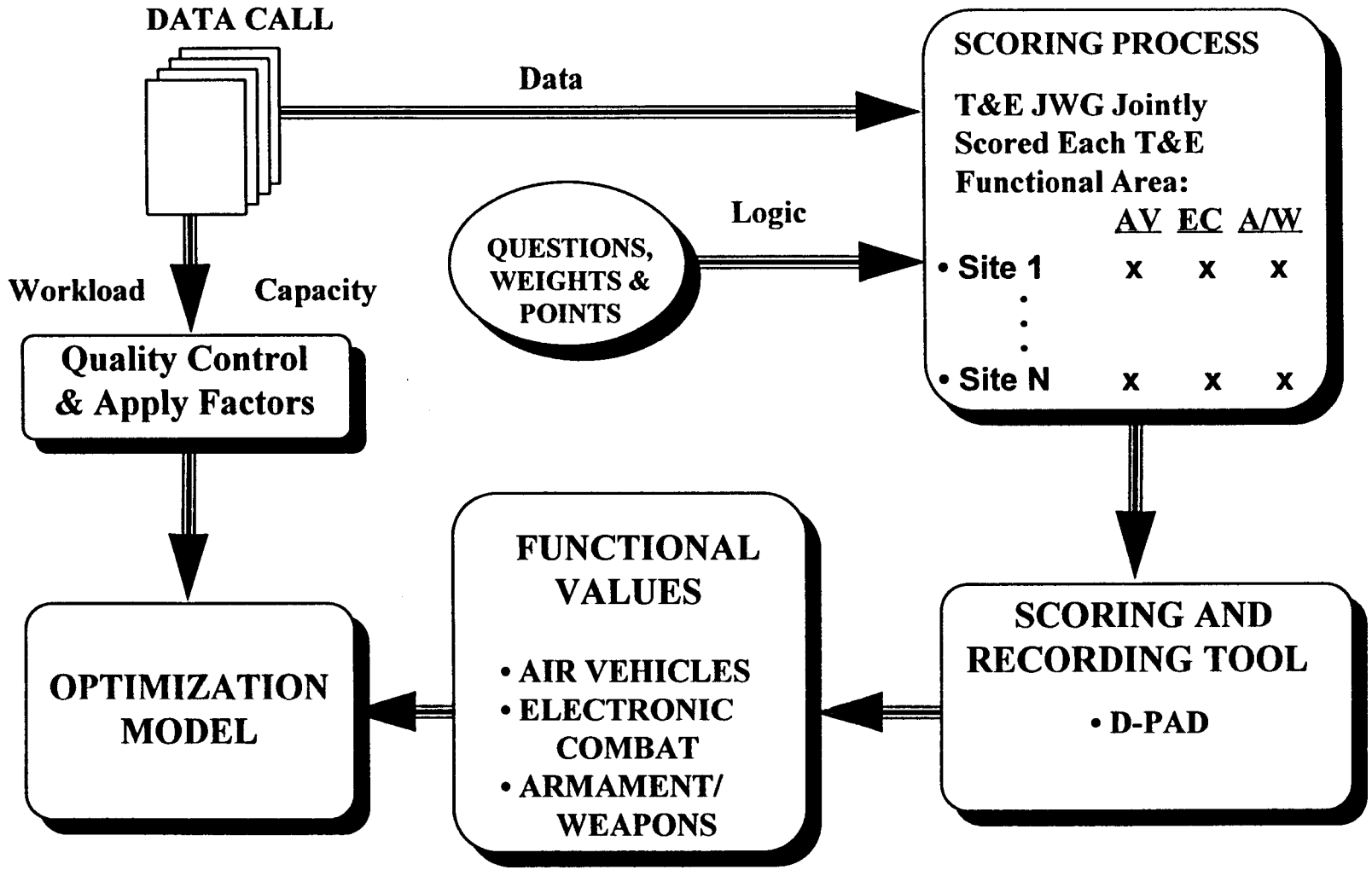

DATA ANALYSIS

Workload and Capacity in Test Hours

All Test Facility Categories - Core and Non-Core Sites

T&E Functional Areas	Workload	Capacity	Excess Capacity
Air Vehicle	319,113	509,612	190,499
Electronic Combat	31,400	64,909	33,509
Armament/ Weapons	280,032	550,595	270,563
Total	630,545	1,125,116	494,571

DATA ANALYSIS

Workload and Capacity in Test Hours

Open Air Ranges - Core and Non-Core Sites

T&E Functional Areas	Workload	Capacity	Excess Capacity
Air Vehicle	27,578	53,761	26,183
Electronic Combat	2,771	5,860	3,089
Armament/ Weapons	31,742	68,857	37,115
Total	62,091	128,478	66,387

DATA ANALYSIS

Workload and Capacity in Test Hours

Non-Core Sites Only

T&E Functional Areas	Workload	Capacity	Excess Capacity	Excess as a % of Total Excess
Air Vehicle	35,282	59,605	24,323	13 %
Electronic Combat	6,954	16,471	9,517	28 %
Armament/ Weapons	35,167	53,469	18,302	7 %
Total	77,403	129,545	52,142	11 %

JCSG POLICY IMPERATIVES

- Retain irreplaceable Air, Land, and Sea space
- Retain the capability to satisfy requirements in each test facility category for each functional area, and retain critical backup capability
- Realign/consolidate capabilities, where cost effective, into existing MRTFB activities with open air ranges
- Exclude operational test agencies and dedicated training activities
- Remove from closure or realignment consideration in each functional area, those facilities/capabilities that:
  - Are Military Department unique
  - Have 5% or less of their total workload in that T&E functional area

JCSG PROPOSAL - CORE REDUCTIONS

- The JCSG Co-Chairs generated for Military Department consideration, additional alternatives to close, realign, or mothball test facilities at the core sites.

- The driving factor in the selections was the excess capacity in the open air range facility category in all three functional areas.

Document Separator

DEPARTMENT OF DEFENSE

NEWS RELEASE

Office of the Assistant to the Secretary of Defense for Public Affairs
1400 Defense Pentagon, Washington, DC 20301-1400

HOLD FOR RELEASE
February 6, 1995

No. 044-95
703-695-0192 (Media)
703-697-3189 (Copies)
703-697-5737(Public Industry)

FISCAL YEAR 1996 MILITARY CONSTRUCTION PROGRAM

The Department of Defense Military Construction request for Fiscal Year 1996 appropriations totals $10.7 billion. The request includes almost 400 construction projects at more than 300 locations to provide facilities needed by the Armed Forces, the Defense Agencies, and for NATO Infrastructure support.

This request provides $2.3 billion for military construction (including environmental compliance), $3.9 billion for base closure activities, and $.2 billion for NATO infrastructure.

The balance of the program provides $.3 billion for planning and design of future construction projects, $3.2 billion for operating and maintaining the 352,000 family housing units, and $.8 billion for constructing and improving family housing units.

A list of specific construction projects is attached.

SUMMARY AND RECONCILIATION OF AUTHORIZATION AUTHORIZATION OF APPROPRIATIONS, AND APPROPRIATIONS REQUESTED FROM CONGRESS FOR FISCAL YEAR 1996 ($000)

SUMMARY

COMPONENT/AGENCY	AUTHORIZATION	AUTHORIZATION OF APPROPRIATIONS 1	APPROPRIATIONS 1
ARMY	1,929,406	1,929,406	1,929,406
NAVY	2,002,170	2,002,170	2,002,170
AIR FORCE	1,593,871	1,593,871	1,593,871
DEFENSE AGENCIES	4,798,536	4,811,536	4,811,536
Defense Finance & Acctg Service	(72,403)	(72,403)	(72,403)
Defense Intelligence Agency	(1,743)	(1,743)	(1,743)
Defense Logistics Agency	(90,954)	(90,954)	(90,954)
Defense Mapping Agency	(40,300)	(40,300)	(40,300)
National Security Agency	(19,410)	(19,410)	(19,410)
Secretary of Defense Activities			
Chemical Demilitarization	(301,000)	(95,000)	(95,000)
Ballistic Missile Defense Organization	(13,600)	(13,600)	(13,600)
Defense Medical Activities	(61,250)	(280,250)	(280,250)
Dependent Schools	(33,971)	(33,971)	(33,971)
Energy Conservation	(50,000)	(50,000)	(50,000)
Air Force Special Activities	(11,500)	(11,500)	(11,500)
Special Operations Forces	(45,393)	(45,393)	(45,393)
Contingency Construction	(11,037)	(11,037)	(11,037)
Family Housing	(56,239)	(56,239)	(56,239)
Minor Construction	(23,007)	(23,007)	(23,007)
Planning and Design	(68,837)	(68,837)	(68,837)
Base Closure 91	(964,843)	(964,843)	(964,843)
Base Closure 93	(2,148,480)	(2,148,480)	(2,148,480)
Base Closure 95	(784,569)	(784,569)	(784,569)
NATO INFRASTRUCTURE	179,000	179,000	179,000
GUARD AND RESERVE	182,012	182,012	182,012
Army National Guard	(18,480)	(18,480)	(18,480)
U.S. Army Reserve	(42,963)	(42,963)	(42,963)
Naval and Marine Corps Reserve	(7,920)	(7,920)	(7,920)
Air National Guard	(85,647)	(85,647)	(85,647)
Air Force Reserve	(27,002)	(27,002)	(27,002)
TOTALS	10,684,995	10,697,995	10,697,995

1 See Reconciliation

Reconciliation ($000)

TOTAL NEW CONSTRUCTION AUTHORIZATION, FY 1996			**10,684,995**
ADDITIONS (Projects Authorized in Prior Years)		**219,000**	
Defense Medical Facilities			
Hospital Replacement, Portsmouth Naval Hospital, Virginia		(71,900)	
Hospital Replacement, Elmendorf Air Force Base, Alaska		(28,100)	
Hospital Replacement, Walter Reed Army Institute of Research, Maryland		(119,000)	
Chemical Demilitarization Facilities			
Authorization request	**301,000**		
Authorization of Appropriation request	**95,000**		
Total		**206,000**	
TOTAL AUTHORIZATION OF APPROPRIATIONS, FY 1996			**10,697,995**
TOTAL APPROPRIATIONS, FY 1996			**10,697,995**

FY 1996 MILITARY CONSTRUCTION TOTAL OBLIGATIONAL AUTHORITY AS REQUESTED

ACTIVE, GUARD AND RESERVE FORCES
INSIDE THE UNITED STATES
($ THOUSANDS)

DATA AS OF FEB 1995

STATE/COMP./INSTALLATION PROJECT NAME	PROJ COST	TOTAL
ALABAMA		
AIR FORCE		
MAXWELL AFB		
CHILD DEVELOPMENT CENTER COMPLEX	3,700	
MAXWELL AFB		3,700
DEFENSE LOGISTICS AGENCY		
DEF DISTRIBUTION ANNISTON - DDAA		
VEHICLE STORAGE SHELTER (DBOF)	3,550	
DEF DISTRIBUTION ANNISTON - DDAA		3,550
DOD DEPENDENT SCHOOLS		
MAXWELL AFB		
MAXWELL ELEM SCHOOL ADDITION/ALTERATION	5,479	
MAXWELL AFB		5,479
AIR NATIONAL GUARD		
BIRMINGHAM MAP		
ALTER KC-135 AIRCRAFT SHOPS	4,400	
BIRMINGHAM MAP		4,400
DANNELLY FIELD		
FIRE STATION	1,445	
DANNELLY FIELD		1,445
**AIR NATIONAL GUARD		5,845
ARMY RESERVE		
JASPER		
ADD/ALT TO USARC/OMS/AMSA	2,500	
JASPER		2,500
AIR FORCE RESERVE		
MAXWELL AFB		
COMPOSITE MAINTENANCE SHOPS	3,608	
MAXWELL AFB		3,608
**ALABAMA		24,682
ALASKA		
AIR FORCE		
EIELSON AFB		
ALTER DORMITORY	3,850	
EIELSON AFB		3,850
ELMENDORF AFB		
MILSTAR COMMUNICATIONS GROUND TERMINAL	850	
REPAIR AIRFIELD TAXIWAY	900	
VISITING OFFICERS QUARTERS	7,350	
ELMENDORF AFB		9,100
TIN CITY		
ABOVE GROUND FUEL TANKS	2,500	
TIN CITY		2,500
**AIR FORCE		15,450
DEFENSE MEDICAL SUPPORT ACTIVITY		
ELMENDORF AIR FORCE BASE		
#HOSPITAL REPLACEMENT PHASE IV	28,100	
ELMENDORF AIR FORCE BASE		28,100
AUTHORIZED IN PRIOR YEAR		(28,100)
ARMY RESERVE		
FORT WAINWRIGHT		
USARC/OMS/STORAGE	4,779	
FORT WAINWRIGHT		4,779

AUTHORIZED IN PRIOR YEAR

FY 1996 MILITARY CONSTRUCTION TOTAL OBLIGATIONAL AUTHORITY AS REQUESTED

ACTIVE, GUARD AND RESERVE FORCES INSIDE THE UNITED STATES ($ THOUSANDS)

DATA AS OF FEB 1995

STATE/COMP./INSTALLATION ----------PROJECT NAME----------	PROJ COST	TOTAL
ALASKA		
FAMILY HOUSING		
AIR FORCE		
ELMENDORF AFB		
HOUSING OFFICE AND MAINTENANCE FACILITY	(3,000)	
ELMENDORF AFB		
FAMILY HOUSING		(3,000)
**ALASKA		48,329
AUTHORIZED IN PRIOR YEAR		(28,100)
FAMILY HOUSING		(3,000)
ARIZONA		
ARMY		
FORT HUACHUCA		
WHOLE BARRACKS COMPLEX RENEWAL	16,000	
FORT HUACHUCA		16,000
AIR FORCE		
DAVIS-MONTHAN AFB		
ALTER AIRCRAFT CORROSION CONTROL FACILITY	1,000	
DORMITORY	3,800	
DAVIS-MONTHAN AFB		4,800
LUKE AFB		
DORMITORY	5,200	
LUKE AFB		5,200
**AIR FORCE		10,000
DEFENSE MEDICAL SUPPORT ACTIVITY		
LUKE AIR FORCE BASE		
HOSPITAL ADD/ALT LIFE SAFETY UPGRADE	8,100	
LUKE AIR FORCE BASE		8,100
AIR NATIONAL GUARD		
TUCSON IAP		
ADD TO & ALTER AIRCRAFT SPT EQUIP SHOP	600	
TUCSON IAP		600
FAMILY HOUSING		
AIR FORCE		
DAVIS-MONTHAN AFB		
REPLACE 80 MILITARY FAMILY HOUSING UNITS.	(9,498)	
DAVIS-MONTHAN AFB		
FAMILY HOUSING		(9,498)
**ARIZONA		34,700
FAMILY HOUSING		(9,498)
ARKANSAS		
AIR FORCE		
LITTLE ROCK AFB		
UPGRADE SANITARY SEWER SYSTEM	2,500	
LITTLE ROCK AFB		2,500
ARMY BUDGETED BY DOD		
PINE BLUFF ARSENAL		
AMMUNITION DEMILITARIZATION FAC PHASE II	40,000	
PINE BLUFF ARSENAL		40,000
FAMILY HOUSING		
AIR FORCE		
LITTLE ROCK AFB		
REPLACE 1 GENERAL OFFICER'S QUARTERS UNIT	(210)	
LITTLE ROCK AFB		
FAMILY HOUSING		(210)
**ARKANSAS		42,500
FAMILY HOUSING		(210)

FY 1996 MILITARY CONSTRUCTION TOTAL OBLIGATIONAL AUTHORITY AS REQUESTED

ACTIVE, GUARD AND RESERVE FORCES — DATA AS OF FEB 1995
INSIDE THE UNITED STATES
($ THOUSANDS)

STATE/COMP./INSTALLATION ----------PROJECT NAME----------	PROJ COST	TOTAL
CALIFORNIA		
ARMY		
FT IRWIN		
CONSOLIDATED MAINTENANCE FACILITY	15,500	
FT IRWIN		15,500
PRESIDIO OF SAN FRANCISCO		
REGIONAL SEWER SYSTEM	3,000	
PRESIDIO OF SAN FRANCISCO		3,000
**ARMY		18,500
NAVY		
CAMP PENDLETON MARINE CORPS BASE		
BACHELOR ENLISTED QUARTERS	11,940	
CHILD DEVELOPMENT CENTER	3,000	
MULTI-PURPOSE MG RANGE	3,800	
PHYSICAL FITNESS CENTER	4,100	
SENSITIVE COMPARTMENTED INFO FACILITY ADD	2,246	
TACTICAL VEHICLE MAINTENANCE FACILITY	1,088	
WATER DISTRIBUTION SYSTEM	1,410	
CAMP PENDLETON MARINE CORPS BASE		27,584
CHINA LAKE NAVAL AIR WARFARE CTR WPNS DIV		
INDUSTRL WSTWTR COLLECT & TRTMT FAC(DBOF)	3,700	
CHINA LAKE NAVAL AIR WARFARE CTR WPNS DIV		3,700
LEMOORE NAVAL AIR STATION		
JET ENGINE TEST CELL	7,600	
LEMOORE NAVAL AIR STATION		7,600
NORTH ISLAND NAVAL AIR STATION		
BERTHING WHARF	58,670	
CONTROLLED INDUSTRIAL FACILITY	42,500	
NORTH ISLAND NAVAL AIR STATION		101,170
PT MUGU NAVAL AIR WARFARE CTR WPNS DIV		
CHILD DEVELOPMENT CENTER (DBOF)	1,300	
PT MUGU NAVAL AIR WARFARE CTR WPNS DIV		1,300
SAN DIEGO NAVAL STATION		
OILY WASTE COLLECTION AND TREATMENT FAC	19,960	
SAN DIEGO NAVAL STATION		19,960
SAN DIEGO NAVCMDCTRL&OCEANSURVCTRDTEDIV		
TEST FACILITY DEMOLITION	3,170	
SAN DIEGO NAVCMDCTRL&OCEANSURVCTRDTEDIV		3,170
TWENTYNINE PALMS MARCORP AIR-GRND COMB CTR		
INFANTRY SQUAD BATTLE COURSE	2,490	
TWENTYNINE PALMS MARCORP AIR-GRND COMB CTR		2,490
**NAVY		166,974
AIR FORCE		
BEALE AFB		
LANDFILL CLOSURE	7,500	
BEALE AFB		7,500
EDWARDS AFB		
ADD TO AND ALTER ANECHOIC CHAMBER	11,100	
DORMITORY	10,600	
F-22 ADD TO AND ALTER ENGINEERING TEST FAC	12,100	
EDWARDS AFB		33,800
TRAVIS AFB		
DORMITORIES	10,500	

FY 1996 MILITARY CONSTRUCTION TOTAL OBLIGATIONAL AUTHORITY AS REQUESTED

ACTIVE, GUARD AND RESERVE FORCES
INSIDE THE UNITED STATES
($ THOUSANDS)

DATA AS OF FEB 1995

STATE/COMP./INSTALLATION ----------PROJECT NAME----------	PROJ COST	TOTAL
CALIFORNIA		
AIR FORCE		
TRAVIS AFB		
DORMITORY	6,400	
HAZARDOUS WASTE STORAGE FACILITY (DBOF)		
(MEMO-NON-ADD)	(600)	
KC-10 ADD TO FLIGHT SIMULATOR FACILITY	2,400	
SQUADRON OPERATIONS/AIRCRAFT MAINTENANCE U	7,400	
TRAVIS AFB		26,700
(MEMO-NON-ADD)		- (600)
VANDENBERG AFB		
FIRE STATION	2,000	
SLFT - CHEMICAL TEST AND ANALYSIS LABORATO	4,000	
VANDENBERG AFB		6,000
**AIR FORCE		74,000
(MEMO-NON-ADD)		(600)
SPECIAL OPERATIONS COMMAND		
NAVAL AIR STATION MIRAMAR		
TRAINING COURSE COMPLEX	5,200	
NAVAL AIR STATION MIRAMAR		5,200
DEFENSE LOGISTICS AGENCY		
DEF DISTRIBUTION STOCKTON - DDJC		
GENERAL PURPOSE WHSE REPLACEMENT (DBOF)	15,000	
DEF DISTRIBUTION STOCKTON - DDJC		15,000
DFSC POINT MUGU		
FUEL STORAGE (DBOF)	750	
DFSC POINT MUGU		750
**DEFENSE LOGISTICS AGENCY		15,750
DEFENSE MEDICAL SUPPORT ACTIVITY		
CAMP PENDLETON MARINE CORPS BASE		
ENVIRONMENTAL HEALTH/INDUSTIAL HYGIENE	1,700	
CAMP PENDLETON MARINE CORPS BASE		1,700
FORT IRWIN		
AMBULATORY HEALTHCARE CLINIC	6,900	
FORT IRWIN		6,900
VANDENBERG AIR FORCE BASE		
LIFE SAFETY/SEISMIC/UTILITY UPGRADE	5,700	
VANDENBERG AIR FORCE BASE		5,700
**DEFENSE MEDICAL SUPPORT ACTIVITY		14,300
AIR NATIONAL GUARD		
SEPULVEDA ANG ANNEX		
REPLACE UNDERGROUND FUEL STORAGE TANKS	320	
SEPULVEDA ANG ANNEX		320
ARMY RESERVE		
CAMP PARKS		
BATTLE PROJECTION CENTER	5,868	
CAMP PARKS		5,868
AIR FORCE RESERVE		
MARCH AFB		
FIRE TRAINING FACILITY	1,550	
MARCH AFB		1,550
FAMILY HOUSING		
NAVY		
LEMOORE NAVAL AIR STATION		
240 UNITS REPLACEMENT	(34,900)	
LEMOORE NAVAL AIR STATION FAMILY HOUSING		(34,900)

FY 1996 MILITARY CONSTRUCTION TOTAL OBLIGATIONAL AUTHORITY AS REQUESTED

ACTIVE, GUARD AND RESERVE FORCES
INSIDE THE UNITED STATES
($ THOUSANDS)

DATA AS OF FEB 1995

STATE/COMP./INSTALLATION ----------PROJECT NAME----------	PROJ COST	TOTAL
CALIFORNIA		
NAVY		
MARINE CORPS BASE CAMP PENDLETON		
COMMUNITY CENTER	(1,438)	
HOUSING OFFICE	(707)	
69 UNITS NEW CONSTRUCTION	(10,000)	
MARINE CORPS BASE CAMP PENDLETON FAMILY HOUSING		(12,145)
PACIFIC MISSILE TEST CENTER POINT MUGU		
HOUSING OFFICE/SELF HELP (NEW CONST)	(1,020)	
PACIFIC MISSILE TEST CENTER POINT MUGU FAMILY HOUSING		(1,020)
PUBLIC WORKS CENTER SAN DIEGO		
346 UNITS REPLACEMENT	(49,310)	
PUBLIC WORKS CENTER SAN DIEGO FAMILY HOUSING		(49,310)
**NAVY FAMILY HOUSING		(97,375)
AIR FORCE		
BEALE AFB		
CONSTRUCT FAMILY HOUSING MANAGEMENT OFFICE	(842)	
BEALE AFB FAMILY HOUSING		(842)
EDWARDS AFB		
REPLACE 67 MILITARY FAMILY HOUSING UNITS	(11,350)	
EDWARDS AFB FAMILY HOUSING		(11,350)
VANDENBERG AFB		
FAMILY HOUSING MANAGEMENT OFFICE	(900)	
REPLACE 143 MILITARY FAMILY HOUSING UNITS	(20,200)	
VANDENBERG AFB FAMILY HOUSING		(21,100)
**AIR FORCE FAMILY HOUSING		(33,292)
**CALIFORNIA		302,462
(MEMO-NON-ADD)		(600)
FAMILY HOUSING		(130,667)
COLORADO		
ARMY		
FORT CARSON		
SANITARY SEWER SYSTEM	1,750	
SEWAGE TREATMENT PLANT	9,100	
FORT CARSON		10,850
AIR FORCE		
BUCKLEY ANG BASE		
TROOP SUPPORT FACILITIES	5,500	
BUCKLEY ANG BASE		5,500
PETERSON AFB		
ADD TO AND ALTER DORMITORY	3,000	
FIRE STATION	1,390	
PETERSON AFB		4,390
US AIR FORCE ACADEMY		
CHILD DEVELOPMENT CENTER	4,200	

FY 1996 MILITARY CONSTRUCTION TOTAL OBLIGATIONAL AUTHORITY AS REQUESTED

ACTIVE, GUARD AND RESERVE FORCES INSIDE THE UNITED STATES ($ THOUSANDS) — DATA AS OF FEB 1995

STATE/COMP./INSTALLATION ----------PROJECT NAME----------	PROJ COST	TOTAL
COLORADO		
AIR FORCE		
US AIR FORCE ACADEMY		
SAILPLANE HANGAR	3,724	
UPGRADE FACILITIES HEATING SYSTEM	4,950	
US AIR FORCE ACADEMY		12,874
**AIR FORCE		22,764
AIR NATIONAL GUARD		
BUCKLEY ANGB		
BASE ENGINEER PAVEMENTS & GROUNDS FACILIT	450	
UPGRADE HEATING SYSTEMS	950	
BUCKLEY ANGB		1,400
FAMILY HOUSING		
AIR FORCE		
PETERSON AFB		
FAMILY HOUSING OFFICE	(570)	
PETERSON AFB		
FAMILY HOUSING		(570)
**COLORADO		35,014
FAMILY HOUSING		(570)
DELAWARE		
AIR FORCE		
DOVER AFB		
C-5 SQD OPERATIONS/ACFT MAINT (DBOF)	5,500	
DOVER AFB		5,500
DEFENSE LOGISTICS AGENCY		
DFSC DOVER AFB		
REPLACE HYDRANT FUEL SYSTEM (DBOF)	15,554	
DFSC DOVER AFB		15,554
DEFENSE MEDICAL SUPPORT ACTIVITY		
DOVER AIR FORCE BASE		
LIFE SAFETY UPGRADE	4,400	
DOVER AIR FORCE BASE		4,400
**DELAWARE		25,454
DISTRICT OF COLUMBIA		
ARMY		
FORT LESLEY J MCNAIR		
NATIONAL DEFENSE UNIVERSITY FACILITY	8,000	
WHOLE BARRACK COMPLEX RENEWAL	5,500	
FORT LESLEY J MCNAIR		13,500
AIR FORCE		
BOLLING AIR FORCE BASE		
ALTER DORMITORY	6,500	
HONOR GUARD DORMITORY	5,600	
BOLLING AIR FORCE BASE		12,100
DEF INTELLIGENCE AGENCY		
BOLLING AFB		
BOILER DIAC	498	
PARKING DIAC	1,245	
BOLLING AFB		1,743
FAMILY HOUSING		
AIR FORCE		
BOLLING AFB		
REPLACE 32 MILITARY FAMILY HOUSING UNITS	(4,100)	
BOLLING AFB		
FAMILY HOUSING		(4,100)
**DISTRICT OF COLUMBIA		27,343
FAMILY HOUSING		(4,100)

FY 1996 MILITARY CONSTRUCTION TOTAL OBLIGATIONAL AUTHORITY AS REQUESTED

ACTIVE, GUARD AND RESERVE FORCES — DATA AS OF FEB 1995
INSIDE THE UNITED STATES
($ THOUSANDS)

STATE/COMP./INSTALLATION ----------PROJECT NAME----------	PROJ COST	TOTAL
FLORIDA		
NAVY		
EGLIN AFB NAVSCH EXPL ORDNANCE DISP DET		
EXPLOSIVE ORDNANCE DISPOSAL TRNG COMPLEX	14,200	
UNDERWATER ORDNANCE DISPOSAL TRNG FAC	1,950	
EGLIN AFB NAVSCH EXPL ORDNANCE DISP DET		16,150
PENSACOLA NAVAL TECHNICAL TRAINING CENTER		
CHILD DEVELOPMENT CENTER	2,565	
PENSACOLA NAVAL TECHNICAL TRAINING CENTER		2,565
**NAVY		18,715
AIR FORCE		
CAPE CANAVERAL AFS		
FIRE TRAINING FACILITY	1,600	
CAPE CANAVERAL AFS		1,600
EGLIN AFB		
REPAIR RUNWAY	6,200	
EGLIN AFB		6,200
TYNDALL AFB		
FIRE TRAINING FACILITY	1,200	
TYNDALL AFB		1,200
**AIR FORCE		9,000
SPECIAL OPERATIONS COMMAND		
DUKE FIELD		
SQ OPERATIONS/AMU	2,400	
DUKE FIELD		2,400
EGLIN AUX FIELD 9		
BENSON TANK STORAGE/MX FACILITY	1,550	
SOF HELICOPTER HANGAR (2)	5,500	
SOF SQUADRON OPS/AMU MH-53	7,100	
EGLIN AUX FIELD 9		14,150
**SPECIAL OPERATIONS COMMAND		16,550
DEFENSE LOGISTICS AGENCY		
DFSC EGLIN AFB		
SOF FUEL STORAGE (DBOF)	2,400	
DFSC EGLIN AFB		2,400
FAMILY HOUSING		
AIR FORCE		
EGLIN AFB		
CONSTRUCT FAMILY HOUSING MANAGEMENT FAC	(500)	
FAMILY HOUSING OFFICE & MAINT FACILITY	(880)	
EGLIN AFB		
FAMILY HOUSING		(1,380)
MACDILL AFB		
CONSTRUCT HOUSING OFFICE	(646)	
MACDILL AFB		
FAMILY HOUSING		(646)
PATRICK AFB		
REPLACE 70 MILITARY FAMILY HOUSING UNITS.	(7,947)	
PATRICK AFB		
FAMILY HOUSING		(7,947)
TYNDALL AFB		
REPLACE 52 MILITARY FAMILY HOUSING UNITS	(5,500)	
TYNDALL AFB		
FAMILY HOUSING		(5,500)
**AIR FORCE		
FAMILY HOUSING		(15,473)
**FLORIDA		46,665
FAMILY HOUSING		(15,473)

FY 1996 MILITARY CONSTRUCTION TOTAL OBLIGATIONAL AUTHORITY AS REQUESTED

ACTIVE, GUARD AND RESERVE FORCES INSIDE THE UNITED STATES ($ THOUSANDS)

DATA AS OF FEB 1995

STATE/COMP./INSTALLATION ----------PROJECT NAME----------	PROJ COST	TOTAL
GEORGIA		
ARMY		
FORT BENNING		
CLOSE COMBAT TACTICAL TRAINER BUILDING	4,900	
WHOLE BARRACKS COMPLEX RENEWAL	33,000	
FORT BENNING		37,900
FORT GORDON		
BATTALION HEADQUARTERS	3,150	
GENERAL PURPOSE WAREHOUSE	2,600	
FORT GORDON		5,750
FT STEWART/HUNTER AAF		
DEPLOYMENT STAGING AREA	8,400	
FT STEWART/HUNTER AAF		8,400
**ARMY		52,050
NAVY		
KINGS BAY STRATEGIC WEAPONS FAC, ATLANTIC		
SECURITY FORCE FACILITY	2,450	
KINGS BAY STRATEGIC WEAPONS FAC, ATLANTIC		2,450
AIR FORCE		
MOODY AFB		
C-130 AERIAL DELIVERY FACILITY	4,600	
C-130 AIRCRAFT WASHRACK FACILITY	1,700	
C-130 SQUADRON OPERATIONS/ AIRCRAFT MAINTE	3,200	
CONTROL TOWER	2,700	
UPGRADE STORM DRAINAGE SYSTEM	690	
MOODY AFB		12,890
ROBINS AFB		
JSTARS AIRCRAFT FUEL SYSTEM MAINTENANCE DO	6,900	
ROBINS AFB		6,900
**AIR FORCE		19,790
DOD DEPENDENT SCHOOLS		
FORT BENNING		
FAITH MIDDLE SCHOOL ADDITION	1,116	
FORT BENNING		1,116
DEFENSE MEDICAL SUPPORT ACTIVITY		
FORT BENNING		
LIFE SAFETY UPGRADE	5,600	
FORT BENNING		5,600
AIR NATIONAL GUARD		
GLYNNCO AIR NATIONAL GUARD STATION		
REPLACE UNDERGROUND FUEL STORAGE TANKS	320	
GLYNNCO AIR NATIONAL GUARD STATION		320
HUNTER ANG SITE		
REPLACE UNDERGROUND FUEL STORAGE TANKS	400	
HUNTER ANG SITE		400
SAVANNAH MAP		
ALTER AIRCRAFT MAINTENANCE SHOPS	1,300	
SAVANNAH MAP		1,300
**AIR NATIONAL GUARD		2,020
FAMILY HOUSING		
AIR FORCE		
MOODY AFB		
REPLACE 1 SR OFF QTRS/1 GEN OFF QTRS, CON	(513)	
MOODY AFB		
FAMILY HOUSING		(513)
**GEORGIA		83,026
FAMILY HOUSING		(513)

FY 1996 MILITARY CONSTRUCTION TOTAL OBLIGATIONAL AUTHORITY AS REQUESTED

ACTIVE, GUARD AND RESERVE FORCES INSIDE THE UNITED STATES ($ THOUSANDS)

DATA AS OF FEB 1995

STATE/COMP./INSTALLATION ----------PROJECT NAME----------	PROJ COST	TOTAL
HAWAII		
NAVY		
HONOLULU COMP&TELCOMM AREA MASTER STA EPAC		
FIRE PROTECTION SYSTEM	1,980	
HONOLULU COMP&TELCOMM AREA MASTER STA EPAC		1,980
PEARL HARBOR INTELLIGENCE CENTER PACIFIC		
OPERATIONS BUILDING ALTERATIONS	2,200	
PEARL HARBOR INTELLIGENCE CENTER PACIFIC		2,200
PEARL HARBOR NAVAL SUBMARINE BASE		
BERTHING PIER	22,500	
PEARL HARBOR NAVAL SUBMARINE BASE		22,500
**NAVY		26,680
AIR FORCE		
HICKAM AFB		
ALTER DORMITORY	3,100	
ALTER TRANSIENT DORMITORY	3,050	
REPAIR AIRFIELD PAVEMENTS	4,550	
HICKAM AFB		10,700
FAMILY HOUSING		
NAVY		
NAVAL COMPLEX, OAHU		
252 UNITS REPLACEMENT	(48,400)	
NAVAL COMPLEX, OAHU		
FAMILY HOUSING		(48,400)
**HAWAII		37,380
FAMILY HOUSING		(48,400)
IDAHO		
AIR FORCE		
MOUNTAIN HOME AFB		
IDAHO TRAINING RANGE (NORTH SITE)	8,000	
UPGRADE STORM DRAINAGE SYSTEM	800	
WASTEWATER TREATMENT AND DISPOSAL PLANT	9,850	
MOUNTAIN HOME AFB		18,650
AIR NATIONAL GUARD		
GOWEN FIELD		
REMOVE UNDERGROUND FUEL STORAGE TANKS	320	
GOWEN FIELD		320
FAMILY HOUSING		
AIR FORCE		
MOUNTAIN HOME AFB		
CONSTRUCT HOUSING MANAGEMENT FACILITY	(844)	
MOUNTAIN HOME AFB		
FAMILY HOUSING		(844)
**IDAHO		18,970
FAMILY HOUSING		(844)
ILLINOIS		
NAVY		
GREAT LAKES NAVAL TRAINING CENTER		
UNIFORM ISSUE BUILDING	12,440	
GREAT LAKES NAVAL TRAINING CENTER		12,440
AIR FORCE		
SCOTT AFB		
DORMITORY	8,000	

FY 1996 MILITARY CONSTRUCTION TOTAL OBLIGATIONAL AUTHORITY AS REQUESTED

ACTIVE, GUARD AND RESERVE FORCES — DATA AS OF FEB 1995
INSIDE THE UNITED STATES
($ THOUSANDS)

STATE/COMP./INSTALLATION ----------PROJECT NAME----------	PROJ COST	TOTAL
ILLINOIS		
AIR FORCE		
SCOTT AFB		
GLOBAL REACH PLANNING CENTER VISITING QUAR	4,700	
SCOTT AFB		12,700
ARMY NATIONAL GUARD		
MARSEILLES		
TRNG SITE, UTIL UPGRADE	1,350	
MARSEILLES		1,350
AIR NATIONAL GUARD		
GREATER PEORIA AIRPORT		
ADD TO AIRCRAFT MAINTENANCE HANGAR	1,200	
ADD TO AIRCRAFT PARKING APRON	630	
ADD TO AND ALTER SQUADRON OPERS FACILITY	970	
AIRCRAFT DEICING FACILITY	400	
ALTER AERIAL PORT TRAINING FACILITY	710	
ALTER AIRCRAFT MAINTENANCE SHOPS	1,450	
GREATER PEORIA AIRPORT		5,360
ARMY RESERVE		
ARLINGTON HEIGHTS		
BATTLE PROJECTION CENTER	4,860	
ARLINGTON HEIGHTS		4,860
FORT SHERIDAN		
ADD/ALT RTS-INTELL	3,300	
FORT SHERIDAN		3,300
**ARMY RESERVE		8,160
**ILLINOIS		40,010
INDIANA		
AIR FORCE RESERVE		
GRISSOM AFB		
FIRE TRAINING FACILITY	1,500	
GRISSOM AFB		1,500
KANSAS		
AIR FORCE		
MCCONNELL AFB		
ALTER DORMITORY	2,200	
DEICING PAD	1,150	
KC-135 SQUADRON OPERATIONS/ACFT MAINTEN.	6,100	
MCCONNELL AFB		9,450
ARMY NATIONAL GUARD		
FORT LEAVENWORTH		
CORPS SIM CENTER, PH II	4,400	
FORT LEAVENWORTH		4,400
AIR NATIONAL GUARD		
MCCONNELL AFB		
ALTER B-1 SQUADRON OPERATIONS FACILITY	800	
MCCONNELL AFB		800
ARMY RESERVE		
OLATHE		
LAND ACQUISITION	539	
OLATHE		539
TOPEKA		
USARC/OMS/AMSA	6,487	
TOPEKA		6,487
**ARMY RESERVE		7,026

FY 1996 MILITARY CONSTRUCTION TOTAL OBLIGATIONAL AUTHORITY AS REQUESTED

ACTIVE, GUARD AND RESERVE FORCES INSIDE THE UNITED STATES ($ THOUSANDS)

DATA AS OF FEB 1995

STATE/COMP./INSTALLATION ----------PROJECT NAME----------	PROJ COST	TOTAL
KANSAS		
FAMILY HOUSING		
AIR FORCE		
MCCONNELL AFB		
REPLACE 39 HOUSING UNITS	(5,193)	
MCCONNELL AFB		
FAMILY HOUSING		(5,193)
**KANSAS		21,676
FAMILY HOUSING		- (5,193)
KENTUCKY		
ARMY		
FORT KNOX		
CLOSE COMBAT TACTICAL TRAINER BUILDING	5,600	
FORT KNOX		5,600
LOUISIANA		
AIR FORCE		
BARKSDALE AFB		
B-52 TRAINING COMPLEX	2,500	
BARKSDALE AFB		2,500
DEFENSE LOGISTICS AGENCY		
DFSC BARKSDALE AFB		
REPLACE HYDRANT FUEL SYSTEM (DBOF)	13,100	
DFSC BARKSDALE AFB		13,100
DEFENSE MEDICAL SUPPORT ACTIVITY		
BARKSDALE AIR FORCE BASE		
LIFE SAFETY UPGRADE	4,100	
BARKSDALE AIR FORCE BASE		4,100
FAMILY HOUSING		
AIR FORCE		
BARKSDALE AFB		
REPLACE 62 MILITARY FAMILY HOUSING UNITS.	(10,299)	
BARKSDALE AFB		
FAMILY HOUSING		(10,299)
**LOUISIANA		19,700
FAMILY HOUSING		(10,299)
MARYLAND		
NAVY		
ANNAPOLIS NAVAL STATION		
BACHELOR ENLISTED QUARTERS	3,600	
ANNAPOLIS NAVAL STATION		3,600
AIR FORCE		
ANDREWS AFB		
DORMITORY	6,000	
UNDERGROUND FUEL STORAGE TANKS	6,886	
ANDREWS AFB		12,886
NATIONAL SECURITY AGENCY		
FORT MEADE		
CRITICAL UTILITIES CONTROL, PHASE I	3,301	
FANX II PURCHASE	14,800	
SPL STEAM GENERATION PLANT	632	
FORT MEADE		18,733
DEFENSE MEDICAL SUPPORT ACTIVITY		
BETHESDA NAVAL HOSPITAL		
POTABLE WATER LINE REPLACEMENT	1,300	
BETHESDA NAVAL HOSPITAL		1,300

FY 1996 MILITARY CONSTRUCTION TOTAL OBLIGATIONAL AUTHORITY AS REQUESTED

ACTIVE, GUARD AND RESERVE FORCES INSIDE THE UNITED STATES ($ THOUSANDS)

DATA AS OF FEB 1995

STATE/COMP./INSTALLATION ----------PROJECT NAME----------	PROJ COST	TOTAL
MARYLAND		
DEFENSE MEDICAL SUPPORT ACTIVITY		
FOREST GLEN (WRAIR)		
ARMED FORCES INST OF PATH REPOSITORY ADD	1,550	
#ARMY INSTITUTE OF RESEARCH PHASE III	119,000	
FOREST GLEN (WRAIR)		120,550
AUTHORIZED IN PRIOR YEAR		(119,000)
**DEFENSE MEDICAL SUPPORT ACTIVITY		121,850
AUTHORIZED IN PRIOR YEAR		(119,000)
FAMILY HOUSING		
NAVY		
NAVAL AIR TEST CENTER PATUXENT RIVER		
WAREHOUSE/SELF HELP (NEW CONST)	(890)	
NAVAL AIR TEST CENTER PATUXENT RIVER		
FAMILY HOUSING		(890)
USNA ANNAPOLIS MD		
HOUSING OFFICE/SELF HELP (NEW CONST)	(800)	
USNA ANNAPOLIS MD		
FAMILY HOUSING		(800)
**NAVY		
FAMILY HOUSING		(1,690)
**MARYLAND		157,069
AUTHORIZED IN PRIOR YEAR		(119,000)
FAMILY HOUSING		(1,690)
MASSACHUSETTS		
AIR NATIONAL GUARD		
BARNES MAP		
VEHICLE MAINTENANCE COMPLEX	2,000	
BARNES MAP		2,000
WORCESTER ANGS		
PAINT AND REFUELING VEHICLES MAINT BAYS	350	
WORCESTER ANGS		350
**AIR NATIONAL GUARD		2,350
NAVY RESERVE		
MCRC CAMP EDWARDS		
RESCEN/COMBAT VEH. MAINT. FAC. ADDN.	2,120	
MCRC CAMP EDWARDS		2,120
**MASSACHUSETTS		4,470
MICHIGAN		
AIR NATIONAL GUARD		
SELFRIDGE ANGB		
UPGRADE HEATING SYSTEMS	2,900	
SELFRIDGE ANGB		2,900
MINNESOTA		
AIR NATIONAL GUARD		
MINN-ST PAUL IAP		
AIRCRAFT DEICING FACILITY	400	
UPGRADE HEATING SYSTEM	780	
MINN-ST PAUL IAP		1,180
MISSISSIPPI		
AIR FORCE		
COLUMBUS AFB		
FIRE TRAINING FACILITY	1,150	
COLUMBUS AFB		1,150

AUTHORIZED IN PRIOR YEAR

FY 1996 MILITARY CONSTRUCTION TOTAL OBLIGATIONAL AUTHORITY AS REQUESTE

ACTIVE, GUARD AND RESERVE FORCES — DATA AS OF FEB 1995
INSIDE THE UNITED STATES
($ THOUSANDS)

STATE/COMP./INSTALLATION ----------PROJECT NAME----------	PROJ COST	TOTAL
MISSISSIPPI		
AIR FORCE		
KEESLER AFB		
UPGRADE STUDENT DORMITORY	6,500	
KEESLER AFB		6,500
**AIR FORCE		7,650
ARMY NATIONAL GUARD		
GULFPORT		
AVCRAD EETF	1,100	
GULFPORT		1,100
FAMILY HOUSING		
AIR FORCE		
KEESLER AFB		
REPLACE 98 MILITARY FAMILY HOUSING UNITS	(9,300)	
KEESLER AFB		
FAMILY HOUSING		(9,300)
**MISSISSIPPI		8,750
FAMILY HOUSING		(9,300)
MISSOURI		
AIR FORCE		
WHITEMAN AFB		
B-2 ADD TO ACFT APRON/CONVOY ROAD/TAXIWAY	1,500	
B-2 ADD TO AND ALTER DOCK FIRE PROTECTION	3,500	
B-2 ADD TO FLIGHT SIMULATOR TRAINING FACIL	4,100	
B-2 AIRCRAFT MAINTENANCE DOCKS/HYDRANT FUE	15,500	
WHITEMAN AFB		24,600
DEFENSE MAPPING AGENCY		
DMA AEROSPACE CENTER		
REPLACE DESTROYED/DAMAGED FAC W/LAND ACQ	40,300	
DMA AEROSPACE CENTER		40,300
FAMILY HOUSING		
AIR FORCE		
WHITEMAN AFB		
CONSTRUCT 72 MILITARY FAMILY HOUSING UNITS	(9,948)	
WHITEMAN AFB		
FAMILY HOUSING		(9,948)
**MISSOURI		64,900
FAMILY HOUSING		(9,948)
NEVADA		
AIR FORCE		
NELLIS AFB		
UPGRADE STORM DRAINAGE SYSTEM	600	
VISITING QUARTERS	9,900	
NELLIS AFB		10,500
FAMILY HOUSING		
AIR FORCE		
NELLIS AFB		
REPLACE 6 SENIOR OFFICERS HOUSING	(1,357)	
NELLIS AFB		
FAMILY HOUSING		(1,357)
**NEVADA		10,500
FAMILY HOUSING		(1,357)

FY 1996 MILITARY CONSTRUCTION TOTAL OBLIGATIONAL AUTHORITY AS REQUESTED

ACTIVE, GUARD AND RESERVE FORCES INSIDE THE UNITED STATES ($ THOUSANDS) — DATA AS OF FEB 1995

STATE/COMP./INSTALLATION ----------PROJECT NAME----------	PROJ COST	TOTAL
NEW JERSEY		
NAVY		
LAKEHURST NAVAIRWARFARE CTR AIRCRAFT DIV		
CHILD DEVELOPMENT CENTER (DBOF)	1,700	
LAKEHURST NAVAIRWARFARE CTR AIRCRAFT DIV		1,700
AIR FORCE		
MCGUIRE AFB		
FIRE TRAINING FACILITY	1,600	
KC-10 SQUADRON OPERATIONS/ AIRCRAFT MAINTE	7,600	
MCGUIRE AFB		9,200
DEFENSE LOGISTICS AGENCY		
DFSC MCGUIRE AFB		
REPLACE HYDRANT FUEL SYSTEM (DBOF)	12,000	
DFSC MCGUIRE AFB		12,000
AIR NATIONAL GUARD		
ATLANTIC CITY		
UPGRADE SANITARY AND WATER SYSTEM	650	
ATLANTIC CITY		650
MCGUIRE AFB		
FUEL CELL AND CORROSION CONTROL FACILITY	5,700	
MCGUIRE AFB		5,700
WARREN GROVE RANGE		
COMPOSITE RANGE OPERATIONS FACILITY	1,100	
WARREN GROVE RANGE		1,100
**AIR NATIONAL GUARD		7,450
**NEW JERSEY		30,350
NEW MEXICO		
AIR FORCE		
CANNON AFB		
UPGRADE STORM DRAINAGE SYSTEM	620	
WASTEWATER TREATMENT AND DISPOSAL PLANT	9,800	
CANNON AFB		10,420
KIRTLAND AFB		
UPGRADE ELECTRICAL DISTRIBUTION SYSTEM	7,656	
UPGRADE STORM DRAINAGE SYSTEM	1,500	
KIRTLAND AFB		9,156
**AIR FORCE		19,576
AIR NATIONAL GUARD		
KIRTLAND AFB		
AIRCRAFT CORROSION CONTROL FACILITY	1,800	
ALTER AIRCRAFT MAINT HANGAR AND SHOPS	900	
COMPOSITE ENGINE AND NDI SHOP	2,700	
LANTIRN MAINTENANCE FACILITY	620	
KIRTLAND AFB		6,020
FAMILY HOUSING		
AIR FORCE		
HOLLOMAN AFB		
REPLACE 1 GENERAL OFFICER'S HOUSING	(225)	
HOLLOMAN AFB		
FAMILY HOUSING		(225)
KIRTLAND AFB		
REPLACE 105 FAMILY HOUSING UNITS, PHASE 2	(11,000)	
KIRTLAND AFB		
FAMILY HOUSING		(11,000)
**AIR FORCE		
FAMILY HOUSING		(11,225)
**NEW MEXICO		25,596
FAMILY HOUSING		(11,225)

FY 1996 MILITARY CONSTRUCTION TOTAL OBLIGATIONAL AUTHORITY AS REQUESTED

ACTIVE, GUARD AND RESERVE FORCES INSIDE THE UNITED STATES ($ THOUSANDS) — DATA AS OF FEB 1995

STATE/COMP./INSTALLATION ----------PROJECT NAME----------	PROJ COST	TOTAL
NEW YORK		
ARMY		
WATERVLIET ARSENAL		
OIL RUNOFF CONTAINMENT FACILITY (DBOF)	680	
WATERVLIET ARSENAL		680
AIR NATIONAL GUARD		
HANCOCK FIELD		
COMPOSITE MEDICAL TRAINING FACILITY	1,990	
HANCOCK FIELD		1,990
NIAGARA FALLS IAP		
UPGRADE RUNWAY OVERRUN	1,950	
UPGRADE STORM WATER & SANITARY SEWER SYS	400	
NIAGARA FALLS IAP		2,350
**AIR NATIONAL GUARD		4,340
NAVY RESERVE		
NAVMARCORESCEN BUFFALO		
RESCEN/MIUW ADDITION	2,826	
NAVMARCORESCEN BUFFALO		2,826
AIR FORCE RESERVE		
NIAGARA FALLS IAP		
FUEL SYSTEM MAINTENANCE HANGAR	4,895	
NIAGARA FALLS IAP		4,895
FAMILY HOUSING		
ARMY		
U S MILITARY ACADEMY		
FAMILY HOUSING REPLACEMENT CONST (119)	(16,500)	
U S MILITARY ACADEMY		
FAMILY HOUSING		(16,500)
**NEW YORK		12,741
FAMILY HOUSING		(16,500)
NORTH CAROLINA		
ARMY		
FORT BRAGG		
STAGING AREA COMPLEX	11,200	
WHOLE BARRACKS COMPLEX RENEWAL	18,500	
FORT BRAGG		29,700
NAVY		
CAMP LEJEUNE MARINE CORPS BASE		
BACHELOR ENLISTED QUARTERS	8,300	
INFANTRY PLATOON BATTLE COURSE	5,500	
WASTEWATER TREATMENT PLANT (PHASE II)	45,500	
CAMP LEJEUNE MARINE CORPS BASE		59,300
CHERRY POINT MARINE CORPS AIR STATION		
ENCLOSE WATER SURVIVAL TRAINING TANK	2,050	
JET ENGINE TEST CELL	7,730	
MISSILE MAGAZINE	1,650	
CHERRY POINT MARINE CORPS AIR STATION		11,430
NEW RIVER MARINE CORPS AIR STATION		
BACHELOR ENLISTED QUARTERS	14,650	
NEW RIVER MARINE CORPS AIR STATION		14,650
**NAVY		85,380
AIR FORCE		
POPE AFB		
C-130 SQUADRON OPS/AMU AND AUDIOVISUAL SER	6,100	

FY 1996 MILITARY CONSTRUCTION TOTAL OBLIGATIONAL AUTHORITY AS REQUESTED

ACTIVE, GUARD AND RESERVE FORCES — DATA AS OF FEB 1995
INSIDE THE UNITED STATES
($ THOUSANDS)

STATE/COMP./INSTALLATION ----------PROJECT NAME----------	PROJ COST	TOTAL
NORTH CAROLINA		
AIR FORCE		
POPE AFB		
UNDERGROUND FUEL STORAGE TANKS	2,150	
POPE AFB		8,250
SEYMOUR JOHNSON AFB		
UPGRADE STORM DRAINAGE SYSTEM	830	
SEYMOUR JOHNSON AFB		830
**AIR FORCE		9,080
SPECIAL OPERATIONS COMMAND		
FORT BRAGG		
GROUP HEADQUARTERS BLDG	2,600	
FORT BRAGG		2,600
ARMY RESERVE		
HICKORY		
USARC	2,713	
HICKORY		2,713
FAMILY HOUSING		
NAVY		
MARINE CORPS AIR STATION CHERRY POINT NC		
COMMUNITY CENTER	(1,003)	
MARINE CORPS AIR STATION CHERRY POINT NC		
FAMILY HOUSING		(1,003)
AIR FORCE		
POPE AFB		
CONSTRUCT 104 MILITARY FAMILY HOUSING UNIT	(9,984)	
POPE AFB		
FAMILY HOUSING		(9,984)
SEYMOUR JOHNSON AFB		
REPLACE 1 GENERAL OFFICERS QUARTERS	(204)	
SEYMOUR JOHNSON AFB		
FAMILY HOUSING		(204)
**AIR FORCE		
FAMILY HOUSING		(10,188)
**NORTH CAROLINA		129,473
FAMILY HOUSING		(11,191)
NORTH DAKOTA		
AIR FORCE		
GRAND FORKS AFB		
DORMITORY	8,500	
KC-135 SQUADRON OPERATIONS/ACFT MAINTEN.	6,300	
GRAND FORKS AFB		14,800
MINOT AFB		
UNDERGROUND FUEL STORAGE TANKS	1,550	
MINOT AFB		1,550
**AIR FORCE		16,350
OHIO		
AIR FORCE		
WRIGHT-PATTERSON AFB		
UPGRADE ELECTRICAL DISTRIBUTION SYSTEM	4,100	
WRIGHT-PATTERSON AFB		4,100

FY 1996 MILITARY CONSTRUCTION TOTAL OBLIGATIONAL AUTHORITY AS REQUESTED

ACTIVE, GUARD AND RESERVE FORCES INSIDE THE UNITED STATES ($ THOUSANDS) — DATA AS OF FEB 1995

STATE/COMP./INSTALLATION ----------PROJECT NAME----------	PROJ COST	TOTAL
OHIO		
DEFENSE FINANCE AND ACCOUNTING SERVICE		
COLUMBUS CENTER		
CONSTRUCT A MULTISTORY ADMIN FAC (DBOF)	72,403	
COLUMBUS CENTER		72,403
AIR NATIONAL GUARD		
BLUE ASH ANG STATION		
REPLACE UNDERGROUND FUEL STORAGE TANKS	380	
BLUE ASH ANG STATION		380
CAMP PERRY		
REPLACE UNDERGROUND FUEL STORAGE TANKS	320	
CAMP PERRY		320
RICKENBACKER ANGB		
REPLACE UNDERGROUND FUEL STORAGE TANKS	310	
RICKENBACKER ANGB		310
**AIR NATIONAL GUARD		1,010
AIR FORCE RESERVE		
YOUNGSTOWN MAP		
ADD TO ALTER ELECTRIC SUBSTATION	4,230	
CONSTRUCT AIRCRAFT PARKING APRON	3,350	
UPGRADE BASE WATER DISTRIBUTION SYSTEM	1,000	
YOUNGSTOWN MAP		8,580
**OHIO		86,093
OKLAHOMA		
ARMY		
FORT SILL		
CENTRAL VEHICLE WASH FACILITY	6,300	
FORT SILL		6,300
AIR FORCE		
ALTUS AFB		
FIRE TRAINING FACILITY	1,200	
ALTUS AFB		1,200
TINKER AFB		
ADD TO AND ALTER DORMITORIES	5,100	
TINKER AFB		5,100
**AIR FORCE		6,300
ARMY NATIONAL GUARD		
LAWTON (FORT SILL)		
OMS/MLRS PH I	2,400	
LAWTON (FORT SILL)		2,400
AIR NATIONAL GUARD		
TULSA IAP		
COMPOSITE COMMUNICATIONS FACILITY	1,900	
TULSA IAP		1,900
WILL ROGERS WORLD AIRPORT		
AERIAL PORT TRAINING FACILITY	2,550	
COMPOSITE FIRE STATION	1,950	
PETROLEUM OPERATIONS FACILITY	400	
WILL ROGERS WORLD AIRPORT		4,900
**AIR NATIONAL GUARD		6,800
**OKLAHOMA		21,800

FY 1996 MILITARY CONSTRUCTION TOTAL OBLIGATIONAL AUTHORITY AS REQUESTED

ACTIVE, GUARD AND RESERVE FORCES
INSIDE THE UNITED STATES
($ THOUSANDS)

DATA AS OF FEB 1995

STATE/COMP./INSTALLATION ----------PROJECT NAME----------	PROJ COST	TOTAL
OREGON		
ARMY BUDGETED BY DOD		
UMATILLA DEPOT		
AMMUNITION DEMILITARIZATION FAC PHASE II	55,000	
UMATILLA DEPOT		55,000
PENNSYLVANIA		
SPECIAL OPERATIONS COMMAND		
OLMSTEAD FIELD, HARRISBURG IAP		
REFUELING VEHICLE SHOP	443	
SOF MOBILITY STORAGE WAREHOUSE	1,200	
OLMSTEAD FIELD, HARRISBURG IAP		1,643
DEFENSE LOGISTICS AGENCY		
DEF DISTRIBUTION NEW CUMBERLAND - DDSP		
TRANSPORT CONTROL FACILITY (DBOF)	4,600	
DEF DISTRIBUTION NEW CUMBERLAND - DDSP		4,600
AIR NATIONAL GUARD		
GREATER PITTSBURGH IAP		
FUEL SYSTEMS MAINTENANCE FACILITY	5,332	
GREATER PITTSBURGH IAP		5,332
FAMILY HOUSING		
NAVY		
NSCC MECHANICBURG PA		
HOUSING OFFICE (NEW CONSTR)	(300)	
NSCC MECHANICBURG PA		
FAMILY HOUSING		(300)

**PENNSYLVANIA		11,575
FAMILY HOUSING		(300)
SOUTH CAROLINA		
ARMY		
CHARLESTON NAVAL WEAPONS STATION		
ARMY STRATEGIC MAINT COMPLEX PH II (DBOF)	16,500	
WHARF ADDITIONS (DBOF)	9,200	
CHARLESTON NAVAL WEAPONS STATION		25,700
FORT JACKSON		
WHOLE BARRACK COMPLEX RENEWAL	32,000	
FORT JACKSON		32,000

**ARMY		57,700
AIR FORCE		
CHARLESTON AFB		
C-17 ADD TO FLIGHT SIMULATOR FACILITY	1,300	
C-17 SQUADRON OPERATIONS/ AIRCRAFT MAINTEN	5,600	
DORMITORY	5,600	
CHARLESTON AFB		12,500
SHAW AFB		
UPGRADE STORM DRAINAGE SYSTEM	1,300	
SHAW AFB		1,300

**AIR FORCE		13,800
DOD DEPENDENT SCHOOLS		
FT JACKSON		
PIERCE TERRACE ELEM SCHOOL ADDITION	576	
FT JACKSON		576

FY 1996 MILITARY CONSTRUCTION TOTAL OBLIGATIONAL AUTHORITY AS REQUESTED

ACTIVE, GUARD AND RESERVE FORCES — DATA AS OF FEB 1995
INSIDE THE UNITED STATES
($ THOUSANDS)

STATE/COMP./INSTALLATION ----------PROJECT NAME----------	PROJ COST	TOTAL
SOUTH CAROLINA		
FAMILY HOUSING		
AIR FORCE		
SHAW AFB		
HOUSING MAINTENANCE FACILITY	(715)	
SHAW AFB		
FAMILY HOUSING		(715)
**SOUTH CAROLINA		72,076
FAMILY HOUSING		(715)
SOUTH DAKOTA		
AIR NATIONAL GUARD		
JOE FOSS FIELD		
BASE SUPPLY COMPLEX	4,000	
JOE FOSS FIELD		4,000
TENNESSEE		
AIR FORCE		
ARNOLD ENGINEERING DEV CENTER		
UPGRADE ENGINE TEST FACILITIES REFRIGERATI	2,300	
UPGRADE FIRE PROTECTION SYSTEMS	2,700	
ARNOLD ENGINEERING DEV CENTER		5,000
AIR NATIONAL GUARD		
MCGHEE-TYSON AIRPORT		
PMEC SCHOOL TRAINING QUARTERS	4,400	
MCGHEE-TYSON AIRPORT		4,400
MEMPHIS IAP		
ADD TO & ALTER BASE ENGINEER MAINT CMPLX	990	
ADD TO & ALTER SECURITY POLICE OPS FAC	1,100	
MEMPHIS IAP		2,090
**AIR NATIONAL GUARD		6,490
**TENNESSEE		11,490
TEXAS		
ARMY		
FORT BLISS		
WHOLE BARRACK COMPLEX RENEWAL	48,000	
FORT BLISS		48,000
FORT HOOD		
WHOLE BARRACK COMPLEX RENEWAL	17,500	
FORT HOOD		17,500
**ARMY		65,500
AIR FORCE		
BROOKS AFB		
ADD TO AND ALTER COMMUNICATIONS FACILITY (MEMO-NON-ADD)	(233)	
BROOKS AFB (MEMO-NON-ADD)		(233)
KELLY AFB		
COMMUNICATIONS FACILITY (MEMO-NON-ADD)	(353)	
WING HEADQUARTERS FACILITY	3,244	
KELLY AFB		3,244
(MEMO-NON-ADD)		(353)

FY 1996 MILITARY CONSTRUCTION TOTAL OBLIGATIONAL AUTHORITY AS REQUESTED

ACTIVE, GUARD AND RESERVE FORCES INSIDE THE UNITED STATES ($ THOUSANDS)

DATA AS OF FEB 1995

STATE/COMP./INSTALLATION -----PROJECT NAME-----	PROJ COST	TOTAL
TEXAS		
AIR FORCE		
LAUGHLIN AFB		
FIRE TRAINING FACILITY	1,400	
LAUGHLIN AFB		1,400
RANDOLPH AFB		
FIRE TRAINING FACILITY	1,200	
UPGRADE AIRFIELD LIGHTING	1,900	
RANDOLPH AFB		3,100
REESE AFB		
FIRE TRAINING FACILITY	1,200	
REESE AFB		1,200
SHEPPARD AFB		
UPGRADE AIRFIELD LIGHTING	1,500	
SHEPPARD AFB		1,500
**AIR FORCE		10,444
(MEMO-NON-ADD)		(586)
BALLISTIC MISSILE DEFENSE ORAGNIZATION		
FORT BLISS		
THAAD 1ST OBSV BN OTM FACILITIES	13,600	
FORT BLISS		13,600
DEFENSE MEDICAL SUPPORT ACTIVITY		
FORT HOOD		
CONSOLIDATED TROOP MEDICAL CLINIC	5,500	
FORT HOOD		5,500
LACKLAND AIR FORCE BASE		
EMERGENCY DEPARTMENT ADDITION/ALTERATION	6,100	
LACKLAND AIR FORCE BASE		6,100
REESE AIR FORCE BASE		
LIFE SAFETY/UTILITY UPGRADE	1,000	
REESE AIR FORCE BASE		1,000
**DEFENSE MEDICAL SUPPORT ACTIVITY		12,600
AIR NATIONAL GUARD		
KELLY AFB		
UPGRADE HEATING AND COOLING SYSTEMS	1,400	
KELLY AFB		1,400
FAMILY HOUSING		
AIR FORCE		
DYESS AFB		
CONSTRUCT HOUSING MAINTENANCE FACILITY	(580)	
REPLACE 150 MILITARY FAMILY HOUSING UNITS	(246)	
DYESS AFB		
FAMILY HOUSING		(826)
LACKLAND AFB		
REPLACE 67 MILITARY FAMILY HOUSING UNITS.	(6,200)	
LACKLAND AFB		
FAMILY HOUSING		(6,200)
SHEPPARD AFB		
CONSTRUCT MANAGEMENT OFFICE	(500)	
REPLACE FAMILY HOUSING MAINTENANCE FAC	(600)	
SHEPPARD AFB		
FAMILY HOUSING		(1,100)
**AIR FORCE		
FAMILY HOUSING		(8,126)
**TEXAS		103,544
(MEMO-NON-ADD)		(586)
FAMILY HOUSING		(8,126)

FY 1996 MILITARY CONSTRUCTION TOTAL OBLIGATIONAL AUTHORITY AS REQUESTED

ACTIVE, GUARD AND RESERVE FORCES INSIDE THE UNITED STATES ($ THOUSANDS) — DATA AS OF FEB 1995

STATE/COMP./INSTALLATION ----------PROJECT NAME----------	PROJ COST	TOTAL
UTAH		
ARMY NATIONAL GUARD		
CAMP WILLIAMS		
TRNG SITE, STORAGE FAC	340	
CAMP WILLIAMS		340
VIRGINIA		
ARMY		
FORT EUSTIS		
DEPLOYMENT TRAINING FACILITY	5,400	
FORT EUSTIS		5,400
FORT MYER		
ARMY MUSEUM LAND ACQUISITION	17,000	
FORT MYER		17,000
**ARMY		22,400
NAVY		
DAM NECK FLEET COMBAT TRAIN CTR ATLANTIC		
LAND ACQUISTION		
(MEMO-NON-ADD)	(4,850)	
DAM NECK FLEET COMBAT TRAIN CTR ATLANTIC		
(MEMO-NON-ADD)		(4,850)
NORFOLK NAVAL STATION		
OILY WASTE COLLECTION SYSTEM (PHASE I)	10,580	
NORFOLK NAVAL STATION		10,580
PORTSMOUTH NAVAL HOSPITAL		
BACHELOR ENLISTED QUARTERS	9,500	
PORTSMOUTH NAVAL HOSPITAL		9,500
QUANTICO MARINE CORPS COMBAT DEV COMMAND		
AMMUNITION STORAGE FACILITY	3,500	
QUANTICO MARINE CORPS COMBAT DEV COMMAND		3,500
WILLIAMSBURG FLEET & INDUSTRIAL SUPPLY CT		
BACHELOR ENLISTED QUARTERS	6,140	
ELECTRICAL DISTRIBUTION SYS ALTERATIONS	2,250	
WILLIAMSBURG FLEET & INDUSTRIAL SUPPLY CT		8,390
YORKTOWN NAVAL WEAPONS STATION		
EXPLOSIVE ORDNANCE DISPOSAL OPS FAC(DBOF)	1,300	
YORKTOWN NAVAL WEAPONS STATION		1,300
**NAVY		33,270
(MEMO-NON-ADD)		(4,850)
AIR FORCE		
LANGLEY AFB		
ALTER AIR COMBAT COMMAND HEADQUARTERS FACI		
(MEMO-NON-ADD)	(263)	
UPGRADE STORM DRAINAGE SYSTEM	1,000	
LANGLEY AFB		1,000
(MEMO-NON-ADD)		(263)
SPECIAL OPERATIONS COMMAND		
DAM NECK		
NSWG-2 HEADQUARTERS, LITTLE CREEK	6,100	
DAM NECK		6,100
NAVAL AMPHIBIOUS BASE, LITTLE CREEK		
AMPHIB OPS SUPPORT BLDG (DAM NECK)	4,500	
NAVAL AMPHIBIOUS BASE, LITTLE CREEK		4,500
**SPECIAL OPERATIONS COMMAND		10,600

FY 1996 MILITARY CONSTRUCTION TOTAL OBLIGATIONAL AUTHORITY AS REQUESTED

ACTIVE, GUARD AND RESERVE FORCES INSIDE THE UNITED STATES ($ THOUSANDS) — DATA AS OF FEB 1995

STATE/COMP./INSTALLATION ----------PROJECT NAME----------	PROJ COST	TOTAL
VIRGINIA		
DEFENSE LOGISTICS AGENCY		
DEFENSE DISTRIBUTION DEPOT - DDNV		
GENERAL PURPOSE WHSE REPLACEMENT (DBOF)	10,400	
DEFENSE DISTRIBUTION DEPOT - DDNV		10,400
DEFENSE MEDICAL SUPPORT ACTIVITY		
NORTHWEST NAVAL SECURITY GROUP ACTIVITY		
MEDICAL/DENTAL CLINIC	4,300	
NORTHWEST NAVAL SECURITY GROUP ACTIVITY		4,300
PORTSMOUTH NAVAL HOSPITAL		
#HOSPITAL REPLACEMENT PHASE VII	71,900	
PORTSMOUTH NAVAL HOSPITAL		71,900
AUTHORIZED IN PRIOR YEAR		(71,900)
**DEFENSE MEDICAL SUPPORT ACTIVITY		76,200
AUTHORIZED IN PRIOR YEAR		(71,900)
AIR NATIONAL GUARD		
CAMP PENDLETON ANGB		
VEHICLE MAINTENANCE COMPLEX	2,000	
CAMP PENDLETON ANGB		2,000
RICHARD E BYRD IAP		
ADD TO AND ALTER F-16 AC MAINT COMPLEX	2,700	
RICHARD E BYRD IAP		2,700
**AIR NATIONAL GUARD		4,700
FAMILY HOUSING		
NAVY		
DAHLGREN NAVAL SURFACE WARFARE CENTER		
HOUSING OFFICE/SELF HELP (NEW CONST)	(520)	
DAHLGREN NAVAL SURFACE WARFARE CENTER		
FAMILY HOUSING		(520)
PUBLIC WORKS CENTER NORFOLK		
HOUSING OFFICE/WAREHOUSE	(1,390)	
320 UNITS REPLACEMENT	(42,500)	
PUBLIC WORKS CENTER NORFOLK		
FAMILY HOUSING		(43,890)
**NAVY		
FAMILY HOUSING		(44,410)
**VIRGINIA		158,570
(MEMO-NON-ADD)		(5,113)
AUTHORIZED IN PRIOR YEAR		(71,900)
FAMILY HOUSING		(44,410)
WASHINGTON		
ARMY		
FORT LEWIS		
CONSOLIDATED FUEL STATION	3,400	
MULTI-PURPOSE TRAINING RANGE-YAKIMA	8,500	
RAIL SPUR & TANK TRAILS-YAKIMA	3,200	
TACTICAL EQUIPMENT SHOP	15,000	
TANK TRAIL EROSION MITIGATION-YAKIMA	2,000	
FORT LEWIS		32,100
NAVY		
BREMERTON PUGET SOUND NAVAL SHIPYARD		
FLEET SUPPORT FACILITIES (DBOF)	6,870	

AUTHORIZED IN PRIOR YEAR

FY 1996 MILITARY CONSTRUCTION TOTAL OBLIGATIONAL AUTHORITY AS REQUESTED

ACTIVE, GUARD AND RESERVE FORCES INSIDE THE UNITED STATES ($ THOUSANDS)

DATA AS OF FEB 1995

STATE/COMP./INSTALLATION ----------PROJECT NAME----------	PROJ COST	TOTAL
WASHINGTON		
NAVY		
BREMERTON PUGET SOUND NAVAL SHIPYARD		
METAL PREPARATION FAC IMPROVEMENTS (DBOF)	2,600	
BREMERTON PUGET SOUND NAVAL SHIPYARD		9,470
KEYPORT NAVAL UNDERSEA WARFARE CENTER DIV		
METAL TREATMENT FACILITY (DBOF)	5,300	
KEYPORT NAVAL UNDERSEA WARFARE CENTER DIV		5,300
**NAVY		14,770
AIR FORCE		
FAIRCHILD AFB		
ALTER DORMITORIES	7,500	
FAIRCHILD AFB		7,500
MCCHORD AFB		
DORMITORY	4,300	
SQUADRON OPERATIONS/ AIRCRAFT MAINTENANCE	5,600	
MCCHORD AFB		9,900
**AIR FORCE		17,400
FAMILY HOUSING		
ARMY		
FORT LEWIS		
FAMILY HOUSING REPLACEMENT CONST (84)	(10,800)	
FORT LEWIS		
FAMILY HOUSING		(10,800)
AIR FORCE		
MCCHORD AFB		
REPLACE 50 FAMILY HOUSING UNITS, PHASE I	(9,504)	
MCCHORD AFB		
FAMILY HOUSING		(9,504)
**WASHINGTON		64,270
FAMILY HOUSING		(20,304)
WISCONSIN		
AIR NATIONAL GUARD		
TRUAX FIELD		
ALTER MUNITIONS FACILITY	670	
TRUAX FIELD		670
ARMY RESERVE		
GREEN BAY		
USARC/OMS/AMSA	6,523	
GREEN BAY		6,523
**WISCONSIN		7,193
WYOMING		
AIR FORCE		
FE WARREN AFB		
ALTER DORMITORIES	5,500	
UPGRADE CENTRAL HEAT PLANT	3,500	
FE WARREN AFB		9,000
ARMY NATIONAL GUARD		
CODY		
OMSS	342	
CODY		342

FY 1996 MILITARY CONSTRUCTION TOTAL OBLIGATIONAL AUTHORITY AS REQUESTED

ACTIVE, GUARD AND RESERVE FORCES — DATA AS OF FEB 1995
INSIDE THE UNITED STATES
($ THOUSANDS)

STATE/COMP./INSTALLATION ----------PROJECT NAME----------	PROJ COST	TOTAL
WYOMING		
ARMY NATIONAL GUARD		
NEWCASTLE		
OMSS	348	
NEWCASTLE		348
**ARMY NATIONAL GUARD		690
**WYOMING		- 9,690
CONUS CLASSIFIED		
ARMY		
CLASSIFIED LOCATIONS		
CLASSIFIED PROJECT	1,900	
CLASSIFIED LOCATIONS		1,900
AIR FORCE		
CLASSIFIED LOCATION		
SPECIAL TACTICAL UNIT DETACHMENT FACILITY	700	
CLASSIFIED LOCATION		700
DEFENSE LEVEL ACTIVITIES		
OSD MILCON		
CLASSIFIED LOCATION	11,500	
OSD MILCON		11,500
**CONUS CLASSIFIED		14,100
CONUS VARIOUS		
NAVY		
CONUS VARIOUS		
SUPPLY WAREHSE	1,200	
CONUS VARIOUS		1,200

TOTALS

ARMY	380,629
FAMILY HOUSING	(27,300)
NAVY	372,125
(MEMO-NON-ADD)	(4,850)
FAMILY HOUSING	(193,178)
AIR FORCE	497,830
(MEMO-NON-ADD)	(1,449)
FAMILY HOUSING	(143,355)
DEFENSEWIDE	649,647
AUTHORIZED IN PRIOR YEAR	(219,000)
INSIDE THE UNITED STATES	1,900,231
(MEMO-NON-ADD)	(6,299)
AUTHORIZED IN PRIOR YEAR	(219,000)
FAMILY HOUSING	(363,833)

FY 1996 MILITARY CONSTRUCTION TOTAL OBLIGATIONAL AUTHORITY AS REQUESTED

ACTIVE, GUARD AND RESERVE FORCES — DATA AS OF FEB 1995
SPECIFIED OUTSIDE THE UNITED STATES
($ THOUSANDS)

STATE/COMP./INSTALLATION ----------PROJECT NAME----------	PROJ COST	TOTAL
GERMANY		
AIR FORCE		
SPANGDAHLEM AB		
ADD TO MISSILE MAINTENANCE FACILITY	930	
DORMITORY	5,900	
SOUND SUPPRESSOR FOUNDATION	950	
SOUND SUPPRESSOR FOUNDATION	600	
SPANGDAHLEM AB		8,380
VOGELWEH		
CHILD DEVELOPMENT CENTER	2,600	
VOGELWEH		2,600
**AIR FORCE		10,980
DOD DEPENDENT SCHOOLS		
RAMSTEIN		
ELEMENTARY/JUNIOR HIGH SCHOOL ADDITIONS	19,205	
RAMSTEIN		19,205
**GERMANY		30,185
GREECE		
AIR FORCE		
ARAXOS		
DORMITORY	1,950	
ARAXOS		1,950
GUAM		
NAVY		
NAVAL COMPUTER&TELCOM AREA MASTERSTA WPAC		
BACHELOR ENLISTED QUARTERS MODERNIZATION	2,250	
NAVAL COMPUTER&TELCOM AREA MASTERSTA WPAC		2,250
NAVY PUBLIC WORKS CENTER		
WASTEWATER TREATMENT PLANT UPGRADES	16,180	
NAVY PUBLIC WORKS CENTER		16,180
**NAVY		18,430
SPECIAL OPERATIONS COMMAND		
NS GUAM		
SEAL TEAM DET BUILDING, GUAM	8,800	
NS GUAM		8,800
FAMILY HOUSING		
AIR FORCE		
ANDERSEN AFB		
HOUSING MAINTENANCE FACILITY	(1,700)	
ANDERSEN AFB		
FAMILY HOUSING		(1,700)
**GUAM		27,230
FAMILY HOUSING		(1,700)
ITALY		
NAVY		
NAPLES NAVAL SUPPORT ACTIVITY		
OPERATIONS SUPPORT CENTER	10,000	
QUALITY OF LIFE FACILITIES (PHASE III)	14,950	
NAPLES NAVAL SUPPORT ACTIVITY		24,950
SIGONELLA NAVAL AIR FACILITY		
FIRE PROTECTION SYSTEM	870	
SIGONELLA NAVAL AIR FACILITY		870

FY 1996 MILITARY CONSTRUCTION TOTAL OBLIGATIONAL AUTHORITY AS REQUESTED

ACTIVE, GUARD AND RESERVE FORCES
SPECIFIED OUTSIDE THE UNITED STATES
($ THOUSANDS)

DATA AS OF FEB 1995

STATE/COMP./INSTALLATION -----PROJECT NAME-----	PROJ COST	TOTAL
ITALY		
NAVY		
SIGONELLA NAVAL AIR STATION		
BACHELOR ENLISTED QUARTERS	11,300	
SIGONELLA NAVAL AIR STATION		11,300
**NAVY		37,120
AIR FORCE		
AVIANO AB		
COMMUNICATIONS MAINTENANCE FACILITY	1,400	
SQUADRON OPERATIONS FACILITY	950	
AVIANO AB		2,350
GHEDI AIRFIELD		
DORMITORY	1,450	
GHEDI AIRFIELD		1,450
**AIR FORCE		3,800
DOD DEPENDENT SCHOOLS		
SIGONELLA NAVAL AIR STATION		
ELEMENTARY/HIGH SCHOOL ADDITIONS	7,595	
SIGONELLA NAVAL AIR STATION		7,595
DEFENSE MEDICAL SUPPORT ACTIVITY		
U.S. NAVAL SUPPORT ACTIVITY, NAPLES		
DISPENSARY (CAPODICHINO)	5,000	
U.S. NAVAL SUPPORT ACTIVITY, NAPLES		5,000
**ITALY		53,515
KOREA		
ARMY		
COMBINED FIELD ARMY		
WHOLE BARRACKS COMPLEX RENEWAL	6,800	
COMBINED FIELD ARMY		6,800
EASTERN CORRIDOR		
DINING FACILITY	4,150	
WHOLE BARRACKS COMPLEX RENEWAL	6,200	
WHOLE BARRACKS COMPLEX RENEWAL	7,300	
EASTERN CORRIDOR		17,650
WESTERN CORRIDOR		
WHOLE BARRACKS COMPLEX RENEWAL	5,600	
WESTERN CORRIDOR		5,600
**ARMY		30,050
PUERTO RICO		
NAVY		
ROOSEVELT ROADS NAVAL STATION		
SANITARY LANDFILL	11,500	
ROOSEVELT ROADS NAVAL STATION		11,500
SABANA SECA NAVAL SECURITY GROUP ACTIVITY		
ROAD IMPROVEMENTS	2,200	
SABANA SECA NAVAL SECURITY GROUP ACTIVITY		2,200
**NAVY		13,700
DEFENSE LOGISTICS AGENCY		
DEFENSE FUEL SUPPORT POINT ROOSEVELT ROADS		
FUEL STORAGE (DBOF)	6,200	
DEFENSE FUEL SUPPORT POINT ROOSEVELT ROADS		6,200

FY 1996 MILITARY CONSTRUCTION TOTAL OBLIGATIONAL AUTHORITY AS REQUESTED

ACTIVE, GUARD AND RESERVE FORCES SPECIFIED OUTSIDE THE UNITED STATES ($ THOUSANDS)

DATA AS OF FEB 1995

STATE/COMP./INSTALLATION ----------PROJECT NAME----------	PROJ COST	TOTAL
PUERTO RICO		
AIR NATIONAL GUARD		
PUERTO RICO IAP		
ADD TO AND ALTER COMPOSITE SUPT FACILITY	510	
MUNITIONS MAINT & STORAGE COMPLEX	3,800	
UPGRADE SECURITY SYSTEM	1,350	
PUERTO RICO IAP		5,660
FAMILY HOUSING		
NAVY		
NS ROOSEVELT ROADS RQ		
HOUSING OFFICE (NEW CONSTR)	(710)	
NS ROOSEVELT ROADS RQ		
FAMILY HOUSING		(710)
**PUERTO RICO		25,560
FAMILY HOUSING		(710)
SPAIN		
DEFENSE LOGISTICS AGENCY		
DFSC ROTA		
HYDRANT FUEL SYSTEM (DBOF)	7,400	
DFSC ROTA		7,400
TURKEY		
AIR FORCE		
ANKARA		
LONG PERIOD SEISIC ARRAY	3,000	
SHORT PERIOD SEISMIC ARRAY	4,000	
ANKARA		7,000
INCIRLIK AB		
CHILD DEVELOPMENT CENTER	1,600	
UPGRADE SEWAGE TREATMENT PLANT	2,900	
INCIRLIK AB		4,500
**AIR FORCE		11,500
FAMILY HOUSING		
AIR FORCE		
INCIRLIK AB		
REPLACE 150 MILITARY FAMILY HOUSING UNITS	(9,900)	
INCIRLIK AB		
FAMILY HOUSING		(9,900)
**TURKEY		11,500
FAMILY HOUSING		(9,900)
UNITED KINGDOM		
AIR FORCE		
RAF LAKENHEATH		
ADD TO MISSILE MAINTENANCE FACILITY	1,820	
RAF LAKENHEATH		1,820
RAF MILDENHALL		
ADD TO AND ALTER CHILD DEVELOPMENT CENTER	2,250	
RAF MILDENHALL		2,250
**AIR FORCE		4,070
NATIONAL SECURITY AGENCY		
MENWITH HILL STATION		
WAREHOUSE SPRINKLERS	677	
MENWITH HILL STATION		677
**UNITED KINGDOM		4,747

FY 1996 MILITARY CONSTRUCTION TOTAL OBLIGATIONAL AUTHORITY AS REQUESTED

ACTIVE, GUARD AND RESERVE FORCES
SPECIFIED OUTSIDE THE UNITED STATES
($ THOUSANDS)

DATA AS OF FEB 1995

STATE/COMP./INSTALLATION ----------PROJECT NAME----------	PROJ COST	TOTAL
OVERSEAS CLASSIFIED		
AIR FORCE		
OVERSEAS CLASSIFIED		
VEHICLE MAINTENANCE FACILITY	1,600	
WAR READINESS MATERIAL WAREHOUSES	15,500	
OVERSEAS CLASSIFIED		17,100
OVERSEAS VARIOUS		
ARMY		
VARIOUS LOCATIONS		
STRATEGIC LOGISTICAL PREPO COMPLEX PH I	48,000	-
VARIOUS LOCATIONS		48,000

TOTALS

ARMY	78,050
NAVY	69,250
FAMILY HOUSING	(710)
AIR FORCE	55,060
FAMILY HOUSING	(11,600)
DEFENSEWIDE	54,877
SPECIFIED OUTSIDE THE UNITED STATES	257,237
FAMILY HOUSING	(12,310)

FY 1996 MILITARY CONSTRUCTION TOTAL OBLIGATIONAL AUTHORITY AS REQUESTED

ACTIVE, GUARD AND RESERVE FORCES — DATA AS OF FEB 1995
UNSPECIFIED WORLDWIDE
($ THOUSANDS)

STATE/COMP./INSTALLATION ----------PROJECT NAME----------	PROJ COST	TOTAL
WORLDWIDE UNSPECIFIED		
NATO INFRASTRUCTURE		
DEFENSE LEVEL ACTIVITIES	199,000	
NATO INFRASTRUCTURE		199,000
BASE REALIGNMENT & CLOSURE PART II		
DEFENSE LEVEL ACTIVITIES	1,044,143	
BASE REALIGNMENT & CLOSURE PART II		1,044,143
BASE REALIGNMENT & CLOSURE ACCT PART III		
DEFENSE LEVEL ACTIVITIES	2,148,480	
BASE REALIGNMENT & CLOSURE ACCT PART III		2,148,480
BASE REALIGNMENT & CLOSURE ACCT PART IV		
DEFENSE LEVEL ACTIVITIES	784,569	
BASE REALIGNMENT & CLOSURE ACCT PART IV		784,569
CONTINGENCY CONSTRUCTION		
DEFENSE LEVEL ACTIVITIES	11,037	
CONTINGENCY CONSTRUCTION		11,037
UNSPECIFIED MINOR CONSTRUCTION		
AIR FORCE RESERVE	4,169	
UNSPECIFIED MINOR CONSTRUCTION		4,169
PLANNING AND DESIGN		
AIR FORCE RESERVE	2,700	
PLANNING AND DESIGN		2,700
UNSPECIFIED MINOR CONSTRUCTION		
ARMY	9,000	
NAVY	7,200	
AIR FORCE	9,030	
SPECIAL OPERATIONS COMMAND	1,700	
BALLISTIC MISSILE DEFENSE ORAGNIZATION	2,909	
DEFENSE LEVEL ACTIVITIES	3,100	
JOINT CHIEFS OF STAFF	6,198	
DOD DEPENDENT SCHOOLS	4,000	
DEFENSE MEDICAL SUPPORT ACTIVITY	5,100	
ARMY NATIONAL GUARD	5,300	
AIR NATIONAL GUARD	4,100	
ARMY RESERVE	1,700	
UNSPECIFIED MINOR CONSTRUCTION		59,337
PLANNING AND DESIGN		
ARMY	32,894	
NAVY	44,457	
AIR FORCE	30,835	
ARMY BUDGETED BY DOD	13,000	
SPECIAL OPERATIONS COMMAND	5,407	
DEFENSE FINANCE AND ACCOUNTING SERVICE	8,600	
BALLISTIC MISSILE DEFENSE ORAGNIZATION	500	
DEFENSE LEVEL ACTIVITIES	13,000	
DEFENSE MEDICAL SUPPORT ACTIVITY	28,330	
ARMY NATIONAL GUARD	2,900	
AIR NATIONAL GUARD	4,580	
ARMY RESERVE	3,694	
NAVY RESERVE	2,974	
PLANNING AND DESIGN		191,171
ENERGY CONSERVATION IMPROVEMENT PROGRAM		
DEFENSE LEVEL ACTIVITIES	50,000	
ENERGY CONSERVATION IMPROVEMENT PROGRAM		50,000
ARMY - HOST NATION SUPPORT		
ARMY	20,000	
ARMY - HOST NATION SUPPORT		20,000
WORLDWIDE UNSPECIFIED		4,514,606

FY 1996 MILITARY CONSTRUCTION TOTAL OBLIGATIONAL AUTHORITY AS REQUESTED

ACTIVE, GUARD AND RESERVE FORCES — DATA AS OF FEB 1995

UNSPECIFIED WORLDWIDE

($ THOUSANDS)

STATE/COMP./INSTALLATION ----------PROJECT NAME----------	PROJ COST	TOTAL
TOTALS		
ARMY		75,488
NAVY		54,631
AIR FORCE		55,414
DEFENSEWIDE		4,329,073
UNSPECIFIED WORLDWIDE		4,514,606

FY 1996 FAMILY HOUSING TOTAL OBLIGATIONAL AUTHORITY AS REQUESTED

DATA AS OF FEB 1995

($ THOUSANDS)

STATE/COMP./INSTALLATION ----------PROJECT NAME----------	PROJ COST	TOTAL
ARMY		
NEW CONSTRUCTION		
NEW YORK		
U S MILITARY ACADEMY		
FAMILY HOUSING REPLACEMENT CONST (119)	16,500	
U S MILITARY ACADEMY		16,500
WASHINGTON		
FORT LEWIS		
FAMILY HOUSING REPLACEMENT CONST (84)	10,800	
FORT LEWIS		10,800
NEW CONSTRUCTION		27,300
CONSTRUCTION IMPROVEMENTS	14,200	14,200
PLANNING	2,000	2,000
TOTAL FAMILY HOUSING, ARMY CONSTRUCTION		43,500
OPERATING EXPENSES		
FURNISHINGS ACCOUNT	48,822	
MANAGEMENT ACCOUNT	84,726	
MISCELLANEOUS ACCOUNT	1,286	
SERVICES ACCOUNT	53,243	
UTILITIES ACCOUNT	271,376	
OPERATING EXPENSES		459,453
LEASING	243,840	243,840
MAINTENANCE OF REAL PROPERTY	634,292	634,292
TOTAL FAMILY HOUSING, ARMY OPERATIONS		1,337,585
INTEREST PAYMENTS	11	11
TOTAL FAMILY HOUSING, ARMY DEBT		11
GRAND TOTAL FAMILY HOUSING, ARMY		1,381,096
NAVY		
NEW CONSTRUCTION		
CALIFORNIA		
LEMOORE NAVAL AIR STATION		
240 UNITS REPLACEMENT	34,900	
LEMOORE NAVAL AIR STATION		34,900
MARINE CORPS BASE CAMP PENDLETON		
COMMUNITY CENTER	1,438	
HOUSING OFFICE	707	
69 UNITS NEW CONSTRUCTION	10,000	
MARINE CORPS BASE CAMP PENDLETON		12,145
PACIFIC MISSILE TEST CENTER POINT MUGU		
HOUSING OFFICE/SELF HELP (NEW CONST)	1,020	
PACIFIC MISSILE TEST CENTER POINT MUGU		1,020
PUBLIC WORKS CENTER SAN DIEGO		
346 UNITS REPLACEMENT	49,310	
PUBLIC WORKS CENTER SAN DIEGO		49,310
CALIFORNIA		97,375
HAWAII		
NAVAL COMPLEX, OAHU		
252 UNITS REPLACEMENT	48,400	
NAVAL COMPLEX, OAHU		48,400

FY 1996 FAMILY HOUSING TOTAL OBLIGATIONAL AUTHORITY AS REQUESTED

DATA AS OF FEB 1995

($ THOUSANDS)

STATE/COMP./INSTALLATION ----------PROJECT NAME----------	PROJ COST	TOTAL
NAVY		
NEW CONSTRUCTION		
MARYLAND		
NAVAL AIR TEST CENTER PATUXENT RIVER		
WAREHOUSE/SELF HELP (NEW CONST)	890	
NAVAL AIR TEST CENTER PATUXENT RIVER		890
USNA ANNAPOLIS MD		
HOUSING OFFICE/SELF HELP (NEW CONST)	800	
USNA ANNAPOLIS MD		800
MARYLAND		1,690
NORTH CAROLINA		
MARINE CORPS AIR STATION CHERRY POINT NC		
COMMUNITY CENTER	1,003	
MARINE CORPS AIR STATION CHERRY POINT NC		1,003
PENNSYLVANIA		
NSCC MECHANICBURG PA		
HOUSING OFFICE (NEW CONSTR)	300	
NSCC MECHANICBURG PA		300
VIRGINIA		
DAHLGREN NAVAL SURFACE WARFARE CENTER		
HOUSING OFFICE/SELF HELP (NEW CONST)	520	
DAHLGREN NAVAL SURFACE WARFARE CENTER		520
PUBLIC WORKS CENTER NORFOLK		
HOUSING OFFICE/WAREHOUSE	1,390	
320 UNITS REPLACEMENT	42,500	
PUBLIC WORKS CENTER NORFOLK		43,890
VIRGINIA		44,410
PUERTO RICO		
NS ROOSEVELT ROADS RQ		
HOUSING OFFICE (NEW CONSTR)	710	
NS ROOSEVELT ROADS RQ		710
NEW CONSTRUCTION		193,888
CONSTRUCTION IMPROVEMENTS	247,477	247,477
PLANNING	24,390	24,390
TOTAL FAMILY HOUSING, NAVY CONSTRUCTION		465,755
OPERATING EXPENSES		
FURNISHINGS ACCOUNT	35,320	
MANAGEMENT ACCOUNT	93,170	
MISCELLANEOUS ACCOUNT	1,252	
SERVICES ACCOUNT	66,363	
UTILITIES ACCOUNT	214,537	
OPERATING EXPENSES		410,642
LEASING	103,582	103,582
MAINTENANCE OF REAL PROPERTY	534,023	534,023
TOTAL FAMILY HOUSING, NAVY OPERATIONS		1,048,247
MORTGAGE INSURANCE PREMIUMS	82	82
TOTAL FAMILY HOUSING, NAVY DEBT		82
GRAND TOTAL FAMILY HOUSING, NAVY		1,514,084
AIR FORCE		
NEW CONSTRUCTION		
ALASKA		
ELMENDORF AFB		
HOUSING OFFICE AND MAINTENANCE FACILITY	3,000	
ELMENDORF AFB		3,000

FY 1996 FAMILY HOUSING TOTAL OBLIGATIONAL AUTHORITY AS REQUESTED

DATA AS OF FEB 1995

($ THOUSANDS)

STATE/COMP./INSTALLATION ----------PROJECT NAME----------	PROJ COST	TOTAL
AIR FORCE		
NEW CONSTRUCTION		
ARIZONA		
DAVIS-MONTHAN AFB		
REPLACE 80 MILITARY FAMILY HOUSING UNITS.	9,498	
DAVIS-MONTHAN AFB		9,498
ARKANSAS		
LITTLE ROCK AFB		
REPLACE 1 GENERAL OFFICER'S QUARTERS UNIT	210	
LITTLE ROCK AFB		210
CALIFORNIA		
BEALE AFB		
CONSTRUCT FAMILY HOUSING MANAGEMENT OFFICE	842	
BEALE AFB		842
EDWARDS AFB		
REPLACE 67 MILITARY FAMILY HOUSING UNITS	11,350	
EDWARDS AFB		11,350
VANDENBERG AFB		
FAMILY HOUSING MANAGEMENT OFFICE	900	
REPLACE 143 MILITARY FAMILY HOUSING UNITS	20,200	
VANDENBERG AFB		21,100
CALIFORNIA		33,292
COLORADO		
PETERSON AFB		
FAMILY HOUSING OFFICE	570	
PETERSON AFB		570
DISTRICT OF COLUMBIA		
BOLLING AFB		
REPLACE 32 MILITARY FAMILY HOUSING UNITS	4,100	
BOLLING AFB		4,100
FLORIDA		
EGLIN AFB		
CONSTRUCT FAMILY HOUSING MANAGEMENT FAC	500	
FAMILY HOUSING OFFICE & MAINT FACILITY	880	
EGLIN AFB		1,380
MACDILL AFB		
CONSTRUCT HOUSING OFFICE	646	
MACDILL AFB		646
PATRICK AFB		
REPLACE 70 MILITARY FAMILY HOUSING UNITS.	7,947	
PATRICK AFB		7,947
TYNDALL AFB		
REPLACE 52 MILITARY FAMILY HOUSING UNITS	5,500	
TYNDALL AFB		5,500
FLORIDA		15,473
GEORGIA		
MOODY AFB		
REPLACE 1 SR OFF QTRS/1 GEN OFF QTRS. CON	513	
MOODY AFB		513
IDAHO		
MOUNTAIN HOME AFB		
CONSTRUCT HOUSING MANAGEMENT FACILITY	844	
MOUNTAIN HOME AFB		844
KANSAS		
MCCONNELL AFB		
REPLACE 39 HOUSING UNITS	5,193	
MCCONNELL AFB		5,193

FY 1996 FAMILY HOUSING TOTAL OBLIGATIONAL AUTHORITY AS REQUESTED

DATA AS OF FEB 1995

($ THOUSANDS)

STATE/COMP./INSTALLATION ----------PROJECT NAME----------	PROJ COST	TOTAL
AIR FORCE		
NEW CONSTRUCTION		
LOUISIANA		
BARKSDALE AFB		
REPLACE 62 MILITARY FAMILY HOUSING UNITS.	10.299	
BARKSDALE AFB		10.299
MISSISSIPPI		
KEESLER AFB		
REPLACE 98 MILITARY FAMILY HOUSING UNITS	9.300	
KEESLER AFB		9.300
MISSOURI		
WHITEMAN AFB		
CONSTRUCT 72 MILITARY FAMILY HOUSING UNITS	9.948	
WHITEMAN AFB		9.948
NEVADA		
NELLIS AFB		
REPLACE 6 SENIOR OFFICERS HOUSING	1.357	
NELLIS AFB		1.357
NEW MEXICO		
HOLLOMAN AFB		
REPLACE 1 GENERAL OFFICER'S HOUSING	225	
HOLLOMAN AFB		225
KIRTLAND AFB		
REPLACE 105 FAMILY HOUSING UNITS. PHASE 2	11.000	
KIRTLAND AFB		11.000
NEW MEXICO		11.225
NORTH CAROLINA		
POPE AFB		
CONSTRUCT 104 MILITARY FAMILY HOUSING UNIT	9.984	
POPE AFB		9.984
SEYMOUR JOHNSON AFB		
REPLACE 1 GENERAL OFFICERS QUARTERS	204	
SEYMOUR JOHNSON AFB		204
NORTH CAROLINA		10.188
SOUTH CAROLINA		
SHAW AFB		
HOUSING MAINTENANCE FACILITY	715	
SHAW AFB		715
TEXAS		
DYESS AFB		
CONSTRUCT HOUSING MAINTENANCE FACILITY	580	
REPLACE 150 MILITARY FAMILY HOUSING UNITS	246	
DYESS AFB		826
LACKLAND AFB		
REPLACE 67 MILITARY FAMILY HOUSING UNITS.	6.200	
LACKLAND AFB		6.200
SHEPPARD AFB		
CONSTRUCT MANAGEMENT OFFICE	500	
REPLACE FAMILY HOUSING MAINTENANCE FAC	600	
SHEPPARD AFB		1.100
TEXAS		8.126
WASHINGTON		
MCCHORD AFB		
REPLACE 50 FAMILY HOUSING UNITS. PHASE I	9.504	
MCCHORD AFB		9.504

FY 1996 FAMILY HOUSING TOTAL OBLIGATIONAL AUTHORITY AS REQUESTED

DATA AS OF FEB 1995

($ THOUSANDS)

STATE/COMP./INSTALLATION ----------PROJECT NAME----------	PROJ COST	TOTAL
AIR FORCE		
NEW CONSTRUCTION		
GUAM		
ANDERSEN AFB		
HOUSING MAINTENANCE FACILITY	1,700	
ANDERSEN AFB		1,700
TURKEY		
INCIRLIK AB		
REPLACE 150 MILITARY FAMILY HOUSING UNITS	9,900	
INCIRLIK AB		9,900
NEW CONSTRUCTION		154,955
CONSTRUCTION IMPROVEMENTS	85,059	85,059
PLANNING	8,989	8,989
TOTAL FAMILY HOUSING, AIR FORCE CONSTRUCTION		249,003
OPERATING EXPENSES		
FURNISHINGS ACCOUNT	43,000	
MANAGEMENT ACCOUNT	45,154	
MISCELLANEOUS ACCOUNT	5,678	
SERVICES ACCOUNT	33,177	
UTILITIES ACCOUNT	197,539	
OPERATING EXPENSES		324,548
LEASING	115,665	115,665
MAINTENANCE OF REAL PROPERTY	408,971	408,971
TOTAL FAMILY HOUSING, AIR FORCE OPERATIONS		849,184
MORTGAGE INSURANCE PREMIUMS	29	29
TOTAL FAMILY HOUSING, AIR FORCE DEBT		29
GRAND TOTAL FAMILY HOUSING, AIR FORCE		1,098,216
DEFENSE LEVEL ACTIVITIES		
NEW CONSTRUCTION		
WORLDWIDE UNSPECIFIED		
UNSPECIFIED WORLDWIDE LOCATIONS		
PRIVATE SECTOR HSG VENTURES,LOCATIONS TBD	22,000	
UNSPECIFIED WORLDWIDE LOCATIONS		22,000
NEW CONSTRUCTION		22,000
TOTAL FAMILY HOUSING, ASDA		22,000
NATIONAL SECURITY AGENCY		
CONSTRUCTION IMPROVEMENTS	50	50
OPERATING EXPENSES		
FURNISHINGS ACCOUNT	784	
MANAGEMENT ACCOUNT	70	
MISCELLANEOUS ACCOUNT	36	
SERVICES ACCOUNT	350	
UTILITIES ACCOUNT	400	
OPERATING EXPENSES		1,640
LEASING	11,236	11,236
MAINTENANCE OF REAL PROPERTY	223	223
TOTAL FAMILY HOUSING, NSA		13,149

FY 1996 FAMILY HOUSING TOTAL OBLIGATIONAL AUTHORITY AS REQUESTED

DATA AS OF FEB 1995

($ THOUSANDS)

STATE/COMP./INSTALLATION ----------PROJECT NAME----------	PROJ COST	TOTAL
DEF INTELLIGENCE AGENCY		
OPERATING EXPENSES		
FURNISHINGS ACCOUNT	2,590	
OPERATING EXPENSES		2,590
LEASING	13,638	13,638
TOTAL FAMILY HOUSING, DIA		16,228
DEFENSE LOGISTICS AGENCY		
CONSTRUCTION IMPROVEMENTS	3,722	3,722
OPERATING EXPENSES		
FURNISHINGS ACCOUNT	26	
MANAGEMENT ACCOUNT	161	
SERVICES ACCOUNT	33	
UTILITIES ACCOUNT	346	
OPERATING EXPENSES		566
MAINTENANCE OF REAL PROPERTY	574	574
TOTAL FAMILY HOUSING, DLA		4,862
GRAND TOTAL FAMILY HOUSING, DEFENSE		56,239
ARMY		
PAYMENT TO HOMEOWNERS	23,862	23,862
OTHER OPERATING COSTS	35,847	35,847
ACQUISITION OF REAL PROPERTY	178,769	178,769
ARMY		238,478

Document Separator

CONSTRUCTION PROGRAMS (C-1)

Department of Defense Budget for Fiscal Years 1996 and 1997

February 1995

Preface

The C-1 is provided annually to the DoD oversight committees of the Congress coincident with the transmission, by the President, of the Budget of the United States Government.

For FY 1994 and FY 1995 the C-1 reflects appropriations "as enacted", including congressional rescissions. It does not reflect transfer of budget authority or unobligated balances, nor proposed program supplements/deferrals.

Office of the Under Secretary Defense (Comptroller)
Department of Defense

TABLE OF CONTENTS

Summary State and Country Listing		Page
FY 1994		
Summary by Location and Purpose	SUMMARY	1-5
Summary by State and Country		6-8
Summary by State and Country by Component		9-19
FY 1995		
Summary by Location and Purpose		21-24
Summary by State and Country		25-29
Summary by State and Country by Component		30-37
FY 1996		
Summary by Location and Purpose		39-43
Summary by State and Country		44-46
Summary by State and Country by Component		47-54
FY 1997		
Summary by Location and Purpose		55-59
Summary by State and Country		60-62
Summary by State and Country by Component		63-69

Detail State and Country Listing		
FY 1994		
Active, Guard & Reserve Forces		
Inside U.S.A.	DETAIL	1-43
Outside U.S.A.		44-46
Unspecified World-wide Locations		47-48
Family Housing		49-53
FY 1995		
Active, Guard & Reserve Forces		
Inside U.S.A.		55-84
Outside U.S.A.		85-87
Unspecified World-wide Locations		88-89
Family Housing		90-95
FY 1996		
Active, Guard & Reserve Forces		
Inside U.S.A.		97-120
Outside U.S.A.		121-124
Unspecified World-wide Locations		125-126
Family Housing		127-132
FY 1997		
Active , Guard & Reserve Forces		
Inside U.S.A.		133-153
Outside U.S.A.		154-156
Unspeicified World-wide Locations		157-158
Family Housing		159-164

TABLE OF CONTENTS (Cont.)

Facility Listing

FY 1994
Active, Guard & Reserve Forces by Type of Facility..... FACILITY 1-28
Family Housing..... 29-30

FY 1995
Active, Guard & Reserve Forces by Type of Facility..... 31-51
Family Housing..... 52-54

FY 1996
Active, Guard & Reserve Forces by Type of Facility..... 55-74
Family Housing..... 75-77

FY 1997
Active, Guard & Reserve Forces by Type of Facility..... 79-96
Family Housing..... 97-99

Summary
Military Construction, Family Housing, and Homeowners Assistance
Authorization/Appropriation/Budget Authority/Total Obligation Authority
Fiscal Year 1996
($ in Thousands)

	Appropriation	Budget Authority	Total Obligational Authority
Mil Construction, Army	472,724	472,724	472,724
Mil Construction, Navy	488,086	488,086	488,086
Mil Construction, Air Force	495,655	495,655	495,655
Mil Construction, Defense-Wide	857,405	857,405	857,405
NATO Infrastructure	179,000	179,000	199,000
Mil Construction, Army National Guard	18,480	18,480	18,480
Mil Construction, Air National Guard	85,647	85,647	85,647
Mil Construction, Army Reserve	42,963	42,963	42,963
Mil Construction, Navy Reserve	7,920	7,920	7,920
Mil Construction, Air Force Reserve	27,002	27,002	27,002
Base Realignment & Closure Account I	-	-	-
Base Realignment & Closure Account II	964,843	964,843	1,044,143
Base Realignment & Closure Account III	2,148,480	2,148,480	2,148,480
Base Realignment & Closure Account IV	784,569	784,569	784,569
Family Housing, Army	1,381,096	1,381,096	1,381,096
Family Housing, Navy	1,514,084	1,514,084	1,514,084
Family Housing, Air Force	1,098,216	1,098,216	1,098,216
Family Housing, Defense-Wide	56,239	56,239	56,239
Homeowners Assistance Program (HAP)	75,586	75,586	238,478
Total	10,697,995	10,697,995	10,960,187
Reconciliation:			
Budget Authority		10,697,995	
NATO Infrastructure Recoupments		+20,000	
Base Realignment & Closure Account II Land Sale Revenues		+79,300	
Homeowners Assistance Financing from Prior Year Balances		+42,021	
Homeowners Assistance Financing from Property Sale Revenues		+120,871	
Total Obligation Authority			10,960,187

Summary
Military Construction, Family Housing, and Homeowners Assistance
Authorization/Appropriation/Budget Authority/Total Obligation Authority
Fiscal Year 1997
($ in Thousands)

	Appropriation	Budget Authority	Total Obligational Authority
Mil Construction, Army	492,082	492,082	492,082
Mil Construction, Navy	460,483	460,483	460,483
Mil Construction, Air Force	478,952	478,952	478,952
Mil Construction, Defense-Wide	923,276	923,276	923,276
NATO Infrastructure	179,000	179,000	199,000
Mil Construction, Army National Guard	14,300	14,300	14,300
Mil Construction, Air National Guard	85,371	85,371	85,371
Mil Construction, Army Reserve	55,159	55,159	55,159
Mil Construction, Navy Reserve	9,082	9,082	9,082
Mil Construction, Air Force Reserve	30,293	30,293	30,293
Base Realignment & Closure Account I	-	-	-
Base Realignment & Closure Account II	127,457	127,457	255,957
Base Realignment & Closure Account III	808,764	808,764	1,291,764
Base Realignment & Closure Account IV	824,200	824,200	824,200
Family Housing, Army	1,399,763	1,399,763	1,399,763
Family Housing, Navy	1,453,757	1,453,757	1,453,757
Family Housing, Air Force	1,116,095	1,116,095	1,116,095
Family Housing, Defense-Wide	329,569	329,569	329,569
Homeowners Assistance Program (HAP)	36,180	36,180	166,340
Total	8,823,783	8,823,783	9,585,443
Reconciliation:			
Budget Authority		8,823,783	
NATO Infrastructure Recoupments		+20,000	
Base Realignment & Closure Account II Land Sale Revenues		+128,500	
Base Realignment & Closure Account III Land Sale Revenues		+483,000	
Homeowners Assistance Financing from Property Sale Revenues		+130,160	
Total Obligation Authority			9,585,443

FY 1994 MILITARY CONSTRUCTION TOTAL OBLIGATIONAL AUTHORITY AS ENACTED

($ THOUSANDS) DATA AS OF FEB 1995

SUMMARY	ACTIVE FORCES ARMY	NAVY	AIR FORCE	DEFWIDE	TOTAL
BY LOCATION:					
SPECIFIED LOCATIONS					
INSIDE THE UNITED STATES	764,035	536,810	928,389	411,232	2,640,466
AUTHORIZED IN PRIOR YEAR			(5,000)	(157,000)	(162,000)
OUTSIDE THE UNITED STATES	21,200	70,590	22,452	20,313	134,555
TOTAL SPECIFIED	785,235	607,400	950,841	431,545	2,775,021
AUTHORIZED IN PRIOR YEAR			(5,000)	(157,000)	(162,000)
UNSPECIFIED LOCATIONS	99,122	60,204	45,939	2,418,297	2,623,562
*** TOTAL BY LOCATION ***	884,357	667,604	996,780	2,849,842	5,398,583
AUTHORIZED IN PRIOR YEAR			(5,000)	(157,000)	(162,000)
BY PURPOSE:					
MAJOR CONSTRUCTION	762,916	597,731	926,054	480,282	2,766,983
AUTHORIZED IN PRIOR YEAR			(5,000)	(157,000)	(162,000)
MINOR CONSTRUCTION					
UNSPECIFIED	12,000	5,500	6,844	23,658	48,002
TOTAL MINOR CONSTR.	12,000	5	282,101		
NATO INFRASTRUCTURE				148,417	148,417
BASE RLNMT & CLOSURE ACCT PT I				77,830	77,830
BASE RLNMT & CLOSURE ACCT PT II				1,438,942	1,438,942
BASE RLNMT & CLOSURE ACCT PT III				636,308	636,308
*** TOTAL BY PURPOSE ***	884,357	667,604	996,780	2,849,842	5,398,583
AUTHORIZED IN PRIOR YEAR			(5,000)	(157,000)	(162,000)

FY 1994 MILITARY CONSTRUCTION TOTAL OBLIGATIONAL AUTHORITY AS ENACTED

($ THOUSANDS) DATA AS OF FEB 1995

SUMMARY	ARMY	NATIONAL GUARD FORCES NAVY	AIR FORCE	DEFWIDE	TOTAL
BY LOCATION:					
SPECIFIED LOCATIONS					
INSIDE THE UNITED STATES	284,488		234,893		519,381
OUTSIDE THE UNITED STATES	1,573		3,470		5,043
TOTAL SPECIFIED	286,061		238,363		524,424
UNSPECIFIED LOCATIONS	9,090		2,941		12,031
*** TOTAL BY LOCATION ***	295,151		241,304		536,455
BY PURPOSE:					
MAJOR CONSTRUCTION	279,880		226,436		506,316
MINOR CONSTRUCTION					
UNSPECIFIED	5,000		4,000		9,000
TOTAL MINOR CONSTR.	5,000		4,000		9,000
PLANNING AND DESIGN	10,271		10,868		21,139
*** TOTAL BY PURPOSE ***	295,151		241,304		536,455

FY 1994 MILITARY CONSTRUCTION TOTAL OBLIGATIONAL AUTHORITY AS ENACTED

($ THOUSANDS) DATA AS OF FEB 1995

SUMMARY	ARMY	NAVY	RESERVE FORCES AIR FORCE	TOTAL
BY LOCATION:				
SPECIFIED LOCATIONS INSIDE THE UNITED STATES	92,936	22,628	69,373	184,937
TOTAL SPECIFIED	92,936	22,628	69,373	184,937
UNSPECIFIED LOCATIONS	6,553	1,775	3,251	11,579
*** TOTAL BY LOCATION ***	99,489	24,403	72,624	196,516
BY PURPOSE:				
MAJOR CONSTRUCTION	90,385	22,002	64,731	177,118
MINOR CONSTRUCTION UNSPECIFIED	2,100	1,042	3,904	7,046
TOTAL MINOR CONSTR.	2,100	1,042	3,904	7,046
PLANNING AND DESIGN	7,004	1,359	3,989	12,352
*** TOTAL BY PURPOSE ***	99,489	24,403	72,624	196,516

FY 1994 MILITARY CONSTRUCTION TOTAL OBLIGATIONAL AUTHORITY AS ENACTED

($ THOUSANDS) DATA AS OF FEB 1995

SUMMARY	TOT GUARD AND RESERVE ARMY	NAVY	AIR FORCE	DEFWIDE	TOTAL
BY LOCATION:					
SPECIFIED LOCATIONS INSIDE THE UNITED STATES	377,424	22,628	304,266		704,318
OUTSIDE THE UNITED STATES	1,573		3,470		5,043
TOTAL SPECIFIED	378,997	22,628	307,736		709,361
UNSPECIFIED LOCATIONS	15,643	1,775	6,192		23,610
*** TOTAL BY LOCATION ***	394,640	24,403	313,928		732,971
BY PURPOSE:					
MAJOR CONSTRUCTION	370,265	22,002	291,167		683,434
MINOR CONSTRUCTION UNSPECIFIED	7,100	1,042	7,904		16,046
TOTAL MINOR CONSTR.	7,100	1,042	7,904		16,046
PLANNING AND DESIGN	17,275	1,359	14,857		33,491
*** TOTAL BY PURPOSE ***	394,640	24,403	313,928		732,971

FY 1994 MILITARY CONSTRUCTION TOTAL OBLIGATIONAL AUTHORITY AS ENACTED

($ THOUSANDS) DATA AS OF FEB 1995

SUMMARY	***FAMILY HOUSING*** ARMY	NAVY	AIR FORCE	DEFWIDE	TOTAL
BY LOCATION:					
SPECIFIED LOCATIONS					
INSIDE THE UNITED STATES	139,450	148,679	100,064		388,193
OUTSIDE THE UNITED STATES		15,470			15,470
TOTAL SPECIFIED	139,450	164,149	100,064		403,663
UNSPECIFIED LOCATIONS	1,305,000	978,114	877,883	26,496	3,187,493
*** TOTAL BY LOCATION ***	1,444,450	1,142,263	977,947	26,496	3,591,156
BY PURPOSE:					
NEW CONSTRUCTION	139,450	164,149	100,064		403,663
CONSTRUCTION IMPROVEMENTS	77,630	183,135	75,070	159	335,994
PLANNING	11,805	22,924	11,901		46,630
OPERATING EXPENSES					
MANAGEMENT ACCOUNT	88,063	79,569	44,282	220	212,134
SERVICES ACCOUNT	64,247	45,539	28,183	416	138,385
UTILITIES ACCOUNT	306,648	192,760	148,036	823	648,267
FURNISHINGS ACCOUNT	55,707	36,904	43,543	1,498	137,652
MISCELLANEOUS ACCOUNT	1,640	1,133	4,639	26	7,438
TOTAL OPERATING EXPENSES	516,305	355,905	268,683	2,983	1,143,876
LEASING	265,639	113,308	118,266	22,473	519,686
MAINTENANCE	287,228	302,754	403,942	881	994,805
MORTGAGE INS., PREMIUMS	17	88	21		126
HOMEOWNERS	146,376				146,376
*** TOTAL BY PURPOSE ***	1,444,450	1,142,263	977,947	26,496	3,591,156

FISCAL YEAR 1994 MILITARY CONSTRUCTION AND FAMILY HOUSING

SUMMARY BY STATE - COUNTRY
($ THOUSANDS)
DATA AS OF FEB 1995

STATE-COUNTRY	ACTIVE FORCES	GUARD AND RESERVE	FAMILY HOUSING	TOTAL
ALABAMA	181,700	34,130	4,080	219,910
AUTHORIZED IN PRIOR YEAR	(5,000)			(5,000)
ALASKA	109,695	20,324		130,019
AUTHORIZED IN PRIOR YEAR	(37,000)			(37,000)
ARIZONA	38,719	5,612		44,331
ARKANSAS	4,500	14,661	980	20,141
CALIFORNIA	123,678	26,424	83,478	233,580
COLORADO	84,610	2,500		87,110
CONNECTICUT	40,940	6,510		47,450
DELAWARE	7,540	1,790		9,330
DISTRICT OF COLUMBIA	7,490		21,556	29,046
FLORIDA	129,662	4,650	21,420	155,732
GEORGIA	136,510	34,340	8,214	179,064
HAWAII	154,900	29,684	52,000	236,584
IDAHO		16,042		16,042
ILLINOIS	7,249	17,331	10,000	34,580
INDIANA	9,600	30,021		39,621
IOWA		22,030		22,030
KANSAS	16,542	11,856		28,398
KENTUCKY	109,489	15,000		124,489
LOUISIANA	18,810	5,865	8,578	33,253
MAINE	4,780	1,380	490	6,650
MARYLAND	133,467	23,462	26,000	182,929
AUTHORIZED IN PRIOR YEAR	(15,000)			(15,000)
MASSACHUSETTS		9,592	5,135	14,727
MICHIGAN		7,008		7,008
MINNESOTA		14,606		14,606

FISCAL YEAR 1994 MILITARY CONSTRUCTION AND FAMILY HOUSING

SUMMARY BY STATE - COUNTRY
($ THOUSANDS)
DATA AS OF FEB 1995

STATE-COUNTRY	ACTIVE FORCES	GUARD AND RESERVE	FAMILY HOUSING	TOTAL
MISSISSIPPI	15,531	31,609		47,140
MISSOURI	44,538	14,347		58,885
MONTANA	7,700	3,801	581	12,082
NEBRASKA	12,100	10,650		22,750
NEVADA	23,400	2,290	500	26,190
NEW JERSEY	20,580	7,014		27,594
NEW MEXICO	77,976	10,940		88,916
NEW YORK	13,800	9,170	15,000	37,970
NORTH CAROLINA	273,211	9,808	18,000	301,019
AUTHORIZED IN PRIOR YEAR	(35,000)			(35,000)
NORTH DAKOTA	27,410	4,564		31,974
OHIO	47,780	31,551		79,331
OKLAHOMA	66,459	6,510		72,969
OREGON		21,034		21,034
PENNSYLVANIA	26,410	36,763		63,173
RHODE ISLAND	15,300	5,530		20,830
SOUTH CAROLINA	21,150	27,787		48,937
SOUTH DAKOTA	8,230	7,450		15,680
TENNESSEE	7,950	20,153		28,103
TEXAS	265,916	19,763	9,051	294,730
AUTHORIZED IN PRIOR YEAR	(50,000)			(50,000)
UTAH	34,280	5,716		39,996
VERMONT		6,006		6,006
VIRGINIA	196,442	4,550	51,986	252,978
AUTHORIZED IN PRIOR YEAR	(20,000)			(20,000)
WASHINGTON	82,930	22,036	37,622	142,588
WEST VIRGINIA		760		760

FISCAL YEAR 1994 MILITARY CONSTRUCTION AND FAMILY HOUSING

SUMMARY BY STATE - COUNTRY
($ THOUSANDS)
DATA AS OF FEB 1995

STATE-COUNTRY	ACTIVE FORCES	GUARD AND RESERVE	FAMILY HOUSING	TOTAL
WISCONSIN		18,360	2,950	21,310
WYOMING	12,640	3,338	10,572	26,550
CONUS CLASSIFIED	15,592	8,000		23,592
CONUS VARIOUS	3,260			3,260
**INSIDE THE USA	2,640,466	704,318	388,193	3,732,977
AUTHORIZED IN PRIOR YEAR	(162,000)			(162,000)

FISCAL YEAR 1994 MILITARY CONSTRUCTION AND FAMILY HOUSING

SUMMARY BY STATE - COUNTRY
($ THOUSANDS)
DATA AS OF FEB 1995

STATE-COUNTRY	ACTIVE FORCES	GUARD AND RESERVE	FAMILY HOUSING	TOTAL
ANTIGUA	1,000			1,000
ASCENSION ISLAND	3,400			3,400
DIEGO GARCIA	11,818			11,818
GERMANY	3,100			3,100
GREENLAND	5,492			5,492
GUAM	52,720	1,973		54,693
ITALY	15,200			15,200
KWAJALEIN	21,200			21,200
PUERTO RICO		3,070		3,070
SPAIN	2,670			2,670
TURKEY	2,400			2,400
UNITED KINGDOM	4,800		15,470	20,270
OVERSEAS CLASSIFIED	10,755			10,755
**SPECIFIED OUTSIDE THE USA	134,555	5,043	15,470	155,068
WORLDWIDE UNSPECIFIED	3,201,692	46,757	3,187,493	6,435,942
WORLDWIDE VARIOUS	-578,130	-23,147		-601,277
**UNSPECIFIED WORLDWIDE	2,623,562	23,610	3,187,493	5,834,665
***MILITARY CONSTRUCTION	5,398,583	732,971	3,591,156	9,722,710
AUTHORIZED IN PRIOR YEAR	(162,000)			(162,000)

FISCAL YEAR 1994 MILITARY CONSTRUCTION AND FAMILY HOUSING

ARMY *** SUMMARY BY STATE - COUNTRY
($ THOUSANDS)
DATA AS OF FEB 1995

STATE-COUNTRY	ACTIVE FORCES	GUARD AND RESERVE	FAMILY HOUSING	TOTAL
ALABAMA	153,550	15,587		169,137
ALASKA	10,740	10,324		21,064
ARIZONA	8,850	4,472		13,322
ARKANSAS		9,811		9,811
CALIFORNIA	5,900	17,574	25,000	48,474
COLORADO	8,450			8,450
CONNECTICUT		6,000		6,000
GEORGIA	60,550	15,000		75,550
HAWAII	18,600	5,684	52,000	76,284
IDAHO		7,592		7,592
ILLINOIS		13,691		13,691
INDIANA		23,921		23,921
IOWA		9,850		9,850
KANSAS	14,642	9,566		24,208
KENTUCKY	81,650	10,000		91,650
LOUISIANA		645		645
MAINE		1,380		1,380
MARYLAND	21,700	4,599	26,000	52,299
MASSACHUSETTS		3,002		3,002
MINNESOTA		13,606		13,606
MISSISSIPPI		29,694		29,694
MISSOURI	1,000	5,577		6,577
MONTANA		501		501
NEVADA	11,700	1,430	500	13,630
NEW JERSEY	18,000	2,700		20,700
NEW MEXICO	6,200	8,505		14,705

FISCAL YEAR 1994 MILITARY CONSTRUCTION AND FAMILY HOUSING

ARMY *** SUMMARY BY STATE - COUNTRY
($ THOUSANDS) DATA AS OF FEB 1995

STATE-COUNTRY	ACTIVE FORCES	GUARD AND RESERVE	FAMILY HOUSING	TOTAL
NEW YORK	13,800		15,000	28,800
NORTH CAROLINA	124,190	9,808	18,000	151,998
NORTH DAKOTA		4,164		4,164
OHIO		15,951		15,951
OKLAHOMA	27,000	1,200		28,200
OREGON		11,084		11,084
PENNSYLVANIA	750	17,513		18,263
SOUTH CAROLINA	2,700	21,837		24,537
SOUTH DAKOTA		5,400		5,400
TENNESSEE		10,863		10,863
TEXAS	91,751	11,003		102,754
UTAH	18,000	1,916		19,916
VERMONT		4,506		4,506
VIRGINIA	48,260			48,260
WASHINGTON	14,200	16,230		30,430
WISCONSIN		11,900	2,950	14,850
WYOMING		3,338		3,338
CONUS CLASSIFIED	1,852			1,852
**INSIDE THE USA	764,035	377,424	139,450	1,280,909
GUAM		1,573		1,573
KWAJALEIN	21,200			21,200
**SPECIFIED OUTSIDE THE USA	21,200	1,573		22,773
WORLDWIDE UNSPECIFIED	121,441	24,375	1,305,000	1,450,816

FISCAL YEAR 1994 MILITARY CONSTRUCTION AND FAMILY HOUSING

ARMY *** SUMMARY BY STATE - COUNTRY
($ THOUSANDS) DATA AS OF FEB 1995

STATE-COUNTRY	ACTIVE FORCES	GUARD AND RESERVE	FAMILY HOUSING	TOTAL
WORLDWIDE VARIOUS	-22,319	-8,732		-31,051
**UNSPECIFIED WORLDWIDE	99,122	15,643	1,305,000	1,419,765
***MILITARY CONSTRUCTION	884,357	394,640	1,444,450	2,723,447

FISCAL YEAR 1994 MILITARY CONSTRUCTION AND FAMILY HOUSING

NAVY *** SUMMARY BY STATE - COUNTRY

($ THOUSANDS) DATA AS OF FEB 1995

STATE-COUNTRY	ACTIVE FORCES	GUARD AND RESERVE	FAMILY HOUSING	TOTAL
CALIFORNIA	50,980	1,000	36,571	88,551
CONNECTICUT	40,940			40,940
DISTRICT OF COLUMBIA	5,490		21,556	27,046
FLORIDA	24,100		300	24,400
GEORGIA	15,730		790	16,520
HAWAII	112,900	500		113,400
INDIANA	9,600			9,600
LOUISIANA		3,920		3,920
MAINE	4,780		490	5,270
MARYLAND	32,290	2,500		34,790
MICHIGAN		3,798		3,798
MISSISSIPPI	4,400			4,400
NEVADA	1,600			1,600
NEW JERSEY	2,580	1,064		3,644
NORTH CAROLINA	51,160			51,160
PENNSYLVANIA	24,360			24,360
RHODE ISLAND	11,300	500		11,800
SOUTH CAROLINA	11,480			11,480
TENNESSEE	1,450	3,690		5,140
TEXAS	1,670			1,670
VIRGINIA	80,660	1,000	51,534	133,194
WASHINGTON	46,080	4,006	37,438	87,524
WISCONSIN		650		650
CONUS VARIOUS	3,260			3,260
**INSIDE THE USA	536,810	22,628	148,679	708,117

FISCAL YEAR 1994 MILITARY CONSTRUCTION AND FAMILY HOUSING

NAVY *** SUMMARY BY STATE - COUNTRY

($ THOUSANDS) DATA AS OF FEB 1995

STATE-COUNTRY	ACTIVE FORCES	GUARD AND RESERVE	FAMILY HOUSING	TOTAL
GUAM	52,720			52,720
ITALY	15,200			15,200
SPAIN	2,670			2,670
UNITED KINGDOM			15,470	15,470
**SPECIFIED OUTSIDE THE USA	70,590		15,470	86,060
WORLDWIDE UNSPECIFIED	69,873	2,401	978,114	1,050,388
WORLDWIDE VARIOUS	-9,669	-626		-10,295
**UNSPECIFIED WORLDWIDE	60,204	1,775	978,114	1,040,093
***MILITARY CONSTRUCTION	667,604	24,403	1,142,263	1,834,270

FISCAL YEAR 1994 MILITARY CONSTRUCTION AND FAMILY HOUSING

AIR FORCE *** SUMMARY BY STATE - COUNTRY
($ THOUSANDS) DATA AS OF FEB 1995

STATE-COUNTRY	ACTIVE FORCES	GUARD AND RESERVE	FAMILY HOUSING	TOTAL
ALABAMA	25,352	18,543	4,080	47,975
AUTHORIZED IN PRIOR YEAR	(5,000)			(5,000)
ALASKA	55,455	10,000		65,455
ARIZONA	23,869	1,140		25,009
ARKANSAS	4,500	4,850	980	10,330
CALIFORNIA	64,468	7,850	21,907	94,225
COLORADO	76,160	2,500		78,660
CONNECTICUT		510		510
DELAWARE	7,540	1,790		9,330
DISTRICT OF COLUMBIA	2,000			2,000
FLORIDA	85,730	4,650	21,120	111,500
GEORGIA	57,070	19,340	7,424	83,834
HAWAII	21,150	23,500		44,650
IDAHO		8,450		8,450
ILLINOIS	7,249	3,640	10,000	20,889
INDIANA		6,100		6,100
IOWA		12,180		12,180
KANSAS	1,900	2,290		4,190
KENTUCKY		5,000		5,000
LOUISIANA	13,860	1,300	8,578	23,738
MARYLAND	19,267	16,363		35,630
MASSACHUSETTS		6,590	5,135	11,725
MICHIGAN		3,210		3,210
MINNESOTA		1,000		1,000
MISSISSIPPI	11,131	1,915		13,046
MISSOURI	43,538	8,770		52,308

FISCAL YEAR 1994 MILITARY CONSTRUCTION AND FAMILY HOUSING

AIR FORCE *** SUMMARY BY STATE - COUNTRY
($ THOUSANDS) DATA AS OF FEB 1995

STATE-COUNTRY	ACTIVE FORCES	GUARD AND RESERVE	FAMILY HOUSING	TOTAL
MONTANA	7,700	3,300	581	11,581
NEBRASKA	11,000	10,650		21,650
NEVADA	10,100	860		10,960
NEW JERSEY		3,250		3,250
NEW MEXICO	58,176	2,435		60,611
NEW YORK		9,170		9,170
NORTH CAROLINA	13,980			13,980
NORTH DAKOTA	26,550	400		26,950
OHIO	44,680	15,600		60,280
OKLAHOMA	39,459	5,310		44,769
OREGON		9,950		9,950
PENNSYLVANIA		19,250		19,250
RHODE ISLAND		5,030		5,030
SOUTH CAROLINA	6,970	5,950		12,920
SOUTH DAKOTA	6,830	2,050		8,880
TENNESSEE	1,500	5,600		7,100
TEXAS	117,695	8,760	9,051	135,506
UTAH	14,580	3,800		18,380
VERMONT		1,500		1,500
VIRGINIA	13,750	3,550	452	17,752
WASHINGTON	14,400	1,800	184	16,384
WEST VIRGINIA		760		760
WISCONSIN		5,810		5,810
WYOMING	12,640		10,572	23,212
CONUS CLASSIFIED	8,140	8,000		16,140
**INSIDE THE USA	928,389	304,266	100,064	1,332,719
AUTHORIZED IN PRIOR YEAR	(5,000)			(5,000)

FISCAL YEAR 1994 MILITARY CONSTRUCTION AND FAMILY HOUSING

AIR FORCE *** SUMMARY BY STATE - COUNTRY
($ THOUSANDS) DATA AS OF FEB 1995

STATE-COUNTRY	ACTIVE FORCES	GUARD AND RESERVE	FAMILY HOUSING	TOTAL
ANTIGUA	1,000			1,000
ASCENSION ISLAND	3,400			3,400
DIEGO GARCIA	2,260			2,260
GERMANY	3,100			3,100
GREENLAND	5,492			5,492
GUAM		400		400
PUERTO RICO		3,070		3,070
TURKEY	2,400			2,400
UNITED KINGDOM	4,800			4,800
**SPECIFIED OUTSIDE THE USA	22,452	3,470		25,922
WORLDWIDE UNSPECIFIED	70,726	19,981	877,883	968,590
WORLDWIDE VARIOUS	-24,787	-13,789		-38,576
**UNSPECIFIED WORLDWIDE	45,939	6,192	877,883	930,014
***MILITARY CONSTRUCTION	996,780	313,928	977,947	2,288,655
AUTHORIZED IN PRIOR YEAR	(5,000)			(5,000)

FISCAL YEAR 1994 MILITARY CONSTRUCTION AND FAMILY HOUSING

DEFENSEWIDE *** SUMMARY BY STATE - COUNTRY
($ THOUSANDS) DATA AS OF FEB 1995

STATE-COUNTRY	ACTIVE FORCES	GUARD AND RESERVE	FAMILY HOUSING	TOTAL
ALABAMA	2,798			2,798
ALASKA	43,500			43,500
AUTHORIZED IN PRIOR YEAR	(37,000)			(37,000)
ARIZONA	6,000			6,000
CALIFORNIA	2,330			2,330
FLORIDA	19,832			19,832
GEORGIA	3,160			3,160
HAWAII	2,250			2,250
KENTUCKY	27,839			27,839
LOUISIANA	4,950			4,950
MARYLAND	60,210			60,210
AUTHORIZED IN PRIOR YEAR	(15,000)			(15,000)
NEBRASKA	1,100			1,100
NEW MEXICO	13,600			13,600
NORTH CAROLINA	83,881			83,881
AUTHORIZED IN PRIOR YEAR	(35,000)			(35,000)
NORTH DAKOTA	860			860
OHIO	3,100			3,100
PENNSYLVANIA	1,300			1,300
RHODE ISLAND	4,000			4,000
SOUTH DAKOTA	1,400			1,400
TENNESSEE	5,000			5,000
TEXAS	54,800			54,800
AUTHORIZED IN PRIOR YEAR	(50,000)			(50,000)
UTAH	1,700			1,700
VIRGINIA	53,772			53,772
AUTHORIZED IN PRIOR YEAR	(20,000)			(20,000)
WASHINGTON	8,250			8,250

FISCAL YEAR 1994 MILITARY CONSTRUCTION AND FAMILY HOUSING

DEFENSEWIDE *** SUMMARY BY STATE - COUNTRY

($ THOUSANDS) DATA AS OF FEB 1995

STATE-COUNTRY	ACTIVE FORCES	GUARD AND RESERVE	FAMILY HOUSING	TOTAL
CONUS CLASSIFIED	5,600			5,600
**INSIDE THE USA	411,232			411,232
AUTHORIZED IN PRIOR YEAR	(157,000)			(157,000)
DIEGO GARCIA	9,558			9,558
OVERSEAS CLASSIFIED	10,755			10,755
**SPECIFIED OUTSIDE THE USA	20,313			20,313
WORLDWIDE UNSPECIFIED	2,939,652		26,496	2,966,148
WORLDWIDE VARIOUS	-521,355			-521,355
**UNSPECIFIED WORLDWIDE	2,418,297		26,496	2,444,793
***MILITARY CONSTRUCTION	2,849,842		26,496	2,876,338
AUTHORIZED IN PRIOR YEAR	(157,000)			(157,000)

FY 1995 MILITARY CONSTRUCTION TOTAL OBLIGATIONAL AUTHORITY AS ENACTED

($ THOUSANDS) DATA AS OF FEB 1995

SUMMARY	ACTIVE FORCES ARMY	NAVY	AIR FORCE	DEFWIDE	TOTAL
BY LOCATION:					
SPECIFIED LOCATIONS					
INSIDE THE UNITED STATES	461,350	338,120	462,154	363,670	1,625,294
AUTHORIZED IN PRIOR YEAR			(4,000)	(261,000)	(265,000)
OUTSIDE THE UNITED STATES	41,000	50,810	38,273		130,083
TOTAL SPECIFIED	502,350	388,930	500,427	363,670	1,755,377
AUTHORIZED IN PRIOR YEAR			(4,000)	(261,000)	(265,000)
UNSPECIFIED LOCATIONS	48,126	10,380	16,386	3,068,606	3,143,498
*** TOTAL BY LOCATION ***	550,476	399,310	516,813	3,432,276	4,898,875
AUTHORIZED IN PRIOR YEAR			(4,000)	(261,000)	(265,000)
BY PURPOSE:					
MAJOR CONSTRUCTION	472,350	348,930	460,427	429,810	1,711,517
AUTHORIZED IN PRIOR YEAR			(4,000)	(261,000)	(265,000)
MINOR CONSTRUCTION					
UNSPECIFIED	12,000	7,000	7,000	22,348	48,348
TOTAL MINOR CONSTR.	12,000	7,000	7,000	22,348	48,348
PLANNING AND DESIGN	66,126	43,380	49,386	51,960	210,852
NATO INFRASTRUCTURE				119,000	119,000
BASE RLNMT & CLOSURE ACCT PT I				87,600	87,600
BASE RLNMT & CLOSURE ACCT PT II				607,489	607,489
BASE RLNMT & CLOSURE ACCT PT III				2,114,069	2,114,069
*** TOTAL BY PURPOSE ***	550,476	399,310	516,813	3,432,276	4,898,875
AUTHORIZED IN PRIOR YEAR			(4,000)	(261,000)	(265,000)

FY 1995 MILITARY CONSTRUCTION TOTAL OBLIGATIONAL AUTHORITY AS ENACTED

($ THOUSANDS) DATA AS OF FEB 1995

SUMMARY	ARMY	NATIONAL GUARD FORCES NAVY	AIR FORCE	DEFWIDE	TOTAL
BY LOCATION:					
SPECIFIED LOCATIONS INSIDE THE UNITED STATES	175,316		228,893		404,209
OUTSIDE THE UNITED STATES			1,340		1,340
TOTAL SPECIFIED	175,316		230,233		405,549
UNSPECIFIED LOCATIONS	12,746		18,358		31,104
*** TOTAL BY LOCATION ***	188,062		248,591		436,653
BY PURPOSE:					
MAJOR CONSTRUCTION	176,995		229,768		406,763
MINOR CONSTRUCTION UNSPECIFIED	5,167		4,000		9,167
TOTAL MINOR CONSTR.	5,167		4,000		9,167
PLANNING AND DESIGN	5,900		14,823		20,723
*** TOTAL BY PURPOSE ***	188,062		248,591		436,653

FY 1995 MILITARY CONSTRUCTION TOTAL OBLIGATIONAL AUTHORITY AS ENACTED

($ THOUSANDS) DATA AS OF FEB 1995

SUMMARY	RESERVE FORCES ARMY	NAVY	AIR FORCE	TOTAL
BY LOCATION:				
SPECIFIED LOCATIONS INSIDE THE UNITED STATES	49,460	20,790	49,458	119,708
TOTAL SPECIFIED	49,460	20,790	49,458	119,708
UNSPECIFIED LOCATIONS	7,910	1,958	7,500	17,368
*** TOTAL BY LOCATION ***	57,370	22,748	56,958	137,076
BY PURPOSE:				
MAJOR CONSTRUCTION	49,460	20,790	49,458	119,708
MINOR CONSTRUCTION UNSPECIFIED	2,657	158	4,000	6,815
TOTAL MINOR CONSTR.	2,657	158	4,000	6,815
PLANNING AND DESIGN	5,253	1,800	3,500	10,553
*** TOTAL BY PURPOSE ***	57,370	22,748	56,958	137,076

FY 1995 MILITARY CONSTRUCTION TOTAL OBLIGATIONAL AUTHORITY AS ENACTED

($ THOUSANDS) DATA AS OF FEB 1995

SUMMARY	TOT GUARD AND RESERVE ARMY	NAVY	AIR FORCE	DEFWIDE	TOTAL
BY LOCATION:					
SPECIFIED LOCATIONS					
INSIDE THE UNITED STATES	224,776	20,790	278,351		523,917
OUTSIDE THE UNITED STATES			1,340		1,340
TOTAL SPECIFIED	224,776	20,790	279,691		525,257
UNSPECIFIED LOCATIONS	20,656	1,958	25,858		48,472
*** TOTAL BY LOCATION ***	245,432	22,748	305,549		573,729
BY PURPOSE:					
MAJOR CONSTRUCTION	226,455	20,790	279,226		526,471
MINOR CONSTRUCTION					
UNSPECIFIED	7,824	158	8,000		15,982
TOTAL MINOR CONSTR.	7,824	158	8,000		15,982
PLANNING AND DESIGN	11,153	1,800	18,323		31,276
*** TOTAL BY PURPOSE ***	245,432	22,748	305,549		573,729

FY 1995 MILITARY CONSTRUCTION TOTAL OBLIGATIONAL AUTHORITY AS ENACTED

($ THOUSANDS) DATA AS OF FEB 1995

SUMMARY	***FAMILY HOUSING*** ARMY	NAVY	AIR FORCE	DEFWIDE	TOTAL
BY LOCATION:					
SPECIFIED LOCATIONS					
INSIDE THE UNITED STATES	114,250	87,182	206,399		407,831
(MEMO-NON-ADD)	(9,700)				(9,700)
OUTSIDE THE UNITED STATES				300	300
TOTAL SPECIFIED	114,250	87,182	206,399	300	408,131
(MEMO-NON-ADD)	(9,700)				(9,700)
UNSPECIFIED LOCATIONS	1,238,644	1,117,882	895,890	29,081	3,281,497
*** TOTAL BY LOCATION ***	1,352,894	1,205,064	1,102,289	29,381	3,689,628
(MEMO-NON-ADD)	(9,700)				(9,700)
BY PURPOSE:					
NEW CONSTRUCTION	114,250	87,182	206,399	300	408,131
(MEMO-NON-ADD)	(9,700)				(9,700)
CONSTRUCTION IMPROVEMENTS	49,760	155,602	61,770	50	267,182
PLANNING	5,992	24,681	9,275		39,948
OPERATING EXPENSES					
MANAGEMENT ACCOUNT	83,241	87,907	45,076	223	216,447
SERVICES ACCOUNT	52,806	62,593	32,724	391	148,514
UTILITIES ACCOUNT	266,077	208,949	178,472	880	654,378
FURNISHINGS ACCOUNT	51,270	38,663	42,852	2,485	135,270
MISCELLANEOUS ACCOUNT	1,200	1,217	5,794	31	8,242
TOTAL OPERATING EXPENSES	454,594	399,329	304,918	4,010	1,162,851
LEASING	234,441	99,826	112,757	24,051	471,075
MAINTENANCE	324,662	438,359	407,144	970	1,171,135
INTEREST PAYMENTS, C&W	11				11
MORTGAGE INS., PREMIUMS		85	26		111
HOMEOWNERS	169,184				169,184
*** TOTAL BY PURPOSE ***	1,352,894	1,205,064	1,102,289	29,381	3,689,628
(MEMO-NON-ADD)	(9,700)				(9,700)

FISCAL YEAR 1995 MILITARY CONSTRUCTION AND FAMILY HOUSING

SUMMARY BY STATE - COUNTRY
($ THOUSANDS)
DATA AS OF FEB 1995

STATE-COUNTRY	ACTIVE FORCES	GUARD AND RESERVE	FAMILY HOUSING	TOTAL
ALABAMA	12,200	35,300	2,100	49,600
ALASKA	73,800	11,680	5,000	90,480
AUTHORIZED IN PRIOR YEAR	(66,000)			(66,000)
ARIZONA	4,900	3,700	10,029	18,629
ARKANSAS	4,800	5,857		10,657
CALIFORNIA	136,460	17,280	85,707	239,447
COLORADO	1,750	9,425	16,500	27,675
CONNECTICUT		9,000		9,000
DELAWARE	10,500			10,500
DISTRICT OF COLUMBIA	600		9,000	9,600
FLORIDA	54,950	11,833	7,145	73,928
GEORGIA	99,200	49,950	10,600	159,750
(MEMO-NON-ADD)			(9,700)	(9,700)
HAWAII	25,600	10,500	42,000	78,100
IDAHO	15,950	2,880	6,593	25,423
ILLINOIS	15,700		30,000	45,700
INDIANA	7,970	24,427		32,397
IOWA		11,755		11,755
KANSAS	500	14,380	20,922	35,802
KENTUCKY	61,000	9,450		70,450
LOUISIANA	15,700	13,685	8,236	37,621
MAINE		13,919		13,919
MARYLAND	60,178	4,558	863	65,599
MASSACHUSETTS		10,200	4,150	14,350
MICHIGAN		13,050		13,050
MINNESOTA		8,000		8,000
MISSISSIPPI	24,440	13,200	10,370	48,010

FISCAL YEAR 1995 MILITARY CONSTRUCTION AND FAMILY HOUSING

SUMMARY BY STATE - COUNTRY
($ THOUSANDS)
DATA AS OF FEB 1995

STATE-COUNTRY	ACTIVE FORCES	GUARD AND RESERVE	FAMILY HOUSING	TOTAL
MISSOURI	24,290	8,901	567	33,758
MONTANA	7,200	4,300		11,500
NEBRASKA	2,260	14,774		17,034
NEVADA	600	15,520		16,120
NEW JERSEY	26,000	10,600		36,600
NEW MEXICO	49,940	900	18,021	68,861
NEW YORK	40,600	6,240	8,000	54,840
NORTH CAROLINA	160,200	14,117	20,899	195,216
AUTHORIZED IN PRIOR YEAR	(79,000)			(79,000)
NORTH DAKOTA	11,050		709	11,759
OHIO	28,750	14,580		43,330
OKLAHOMA	53,873	15,363		69,236
OREGON		10,063		10,063
PENNSYLVANIA	41,700	22,890		64,590
RHODE ISLAND	24,500			24,500
SOUTH CAROLINA	50,550	10,860	631	62,041
SOUTH DAKOTA	5,950	2,500		8,450
TENNESSEE	1,900	24,768		26,668
TEXAS	106,490	5,132	50,277	161,899
UTAH		2,690	11,400	14,090
VERMONT		4,800		4,800
VIRGINIA	224,122	4,500	14,976	243,598
AUTHORIZED IN PRIOR YEAR	(120,000)			(120,000)
WASHINGTON	130,230	11,650	1,815	143,695
WEST VIRGINIA		500		500
WISCONSIN		8,940		8,940
WYOMING	2,650	5,300	11,321	19,271

FISCAL YEAR 1995 MILITARY CONSTRUCTION AND FAMILY HOUSING

SUMMARY BY STATE - COUNTRY
($ THOUSANDS)
DATA AS OF FEB 1995

STATE-COUNTRY	ACTIVE FORCES	GUARD AND RESERVE	FAMILY HOUSING	TOTAL
CONUS CLASSIFIED	4,041			4,041
CONUS VARIOUS	2,200			2,200
**INSIDE THE USA	1,625,294	523,917	407,831	2,557,042
(MEMO-NON-ADD)			(9,700)	(9,700)
AUTHORIZED IN PRIOR YEAR	(265,000)			(265,000)

FISCAL YEAR 1995 MILITARY CONSTRUCTION AND FAMILY HOUSING

SUMMARY BY STATE - COUNTRY
($ THOUSANDS)
DATA AS OF FEB 1995

STATE-COUNTRY	ACTIVE FORCES	GUARD AND RESERVE	FAMILY HOUSING	TOTAL
BELGIUM			300	300
GERMANY	21,823			21,823
GREECE	3,050			3,050
GREENLAND	2,450			2,450
ITALY	42,210			42,210
KOREA	34,600			34,600
KWAJALEIN	6,400			6,400
PORTUGAL	2,850			2,850
PUERTO RICO	1,650	1,340		2,990
UNITED KINGDOM	11,000			11,000
OVERSEAS CLASSIFIED	4,050			4,050
**SPECIFIED OUTSIDE THE USA	130,083	1,340	300	131,723
WORLDWIDE UNSPECIFIED	3,253,498	47,258	3,281,497	6,582,253
WORLDWIDE VARIOUS	-110,000	1,214		-108,786
**UNSPECIFIED WORLDWIDE	3,143,498	48,472	3,281,497	6,473,467
***MILITARY CONSTRUCTION	4,898,875	573,729	3,689,628	9,162,232
(MEMO-NON-ADD)			(9,700)	(9,700)
AUTHORIZED IN PRIOR YEAR	(265,000)			(265,000)

FISCAL YEAR 1995 MILITARY CONSTRUCTION AND FAMILY HOUSING

ARMY *** SUMMARY BY STATE - COUNTRY
($ THOUSANDS) DATA AS OF FEB 1995

STATE-COUNTRY	ACTIVE FORCES	GUARD AND RESERVE	FAMILY HOUSING	TOTAL
ALABAMA	2,600	7,200		9,800
ALASKA		6,380	5,000	11,380
ARKANSAS		3,217		3,217
CALIFORNIA	10,000	9,080		19,080
COLORADO		7,725	16,500	24,225
CONNECTICUT		9,000		9,000
FLORIDA		2,083		2,083
GEORGIA	51,300	23,800	10,600	85,700
(MEMO-NON-ADD)			(9,700)	(9,700)
HAWAII	20,700	9,500	26,000	56,200
IDAHO		2,500		2,500
INDIANA		11,477		11,477
IOWA		5,555		5,555
KANSAS		5,960	12,600	18,560
KENTUCKY	61,000	6,500		67,500
LOUISIANA		2,745		2,745
MAINE		3,900		3,900
MARYLAND	9,200	4,558		13,758
MASSACHUSETTS		4,100	4,150	8,250
MICHIGAN		1,420		1,420
MISSISSIPPI		3,900		3,900
MISSOURI		2,811		2,811
NEVADA		15,520		15,520
NEW JERSEY	4,050			4,050
NEW YORK	40,600	1,820	8,000	50,420
NORTH CAROLINA	51,200	3,519		54,719

FISCAL YEAR 1995 MILITARY CONSTRUCTION AND FAMILY HOUSING

ARMY *** SUMMARY BY STATE - COUNTRY
($ THOUSANDS) DATA AS OF FEB 1995

STATE-COUNTRY	ACTIVE FORCES	GUARD AND RESERVE	FAMILY HOUSING	TOTAL
OHIO		4,500		4,500
OKLAHOMA	18,000	4,463		22,463
OREGON		3,713		3,713
PENNSYLVANIA	17,000	17,130		34,130
SOUTH CAROLINA	20,000	10,860		30,860
TENNESSEE		17,118		17,118
TEXAS	66,900	5,132	31,400	103,432
UTAH		2,290		2,290
VIRGINIA	22,900			22,900
WASHINGTON	64,000			64,000
WYOMING		5,300		5,300
CONUS CLASSIFIED	1,900			1,900
**INSIDE THE USA	461,350	224,776	114,250	800,376
(MEMO-NON-ADD)			(9,700)	(9,700)
KOREA	34,600			34,600
KWAJALEIN	6,400			6,400
**SPECIFIED OUTSIDE THE USA	41,000			41,000
WORLDWIDE UNSPECIFIED	78,126	18,977	1,238,644	1,335,747
WORLDWIDE VARIOUS	-30,000	1,679		-28,321
**UNSPECIFIED WORLDWIDE	48,126	20,656	1,238,644	1,307,426
***MILITARY CONSTRUCTION	550,476	245,432	1,352,894	2,148,802
(MEMO-NON-ADD)			(9,700)	(9,700)

FISCAL YEAR 1995 MILITARY CONSTRUCTION AND FAMILY HOUSING

NAVY *** SUMMARY BY STATE - COUNTRY
($ THOUSANDS) DATA AS OF FEB 1995

STATE-COUNTRY	ACTIVE FORCES	GUARD AND RESERVE	FAMILY HOUSING	TOTAL
CALIFORNIA	70,130		46,814	116,944
FLORIDA	4,300			4,300
GEORGIA		7,250		7,250
HAWAII	4,900		16,000	20,900
ILLINOIS	13,000			13,000
INDIANA	7,970			7,970
LOUISIANA		840		840
MARYLAND	26,500		863	27,363
MISSISSIPPI			10,370	10,370
NEW JERSEY	2,950			2,950
NEW MEXICO	1,390			1,390
NORTH CAROLINA	16,950			16,950
PENNSYLVANIA	24,700	2,300		27,000
RHODE ISLAND	24,500			24,500
SOUTH CAROLINA	19,150			19,150
TEXAS	15,640		11,800	27,440
VIRGINIA	65,910		555	66,465
WASHINGTON	37,930	10,400	780	49,110
CONUS VARIOUS	2,200			2,200
**INSIDE THE USA	338,120	20,790	87,182	446,092
GREECE	3,050			3,050
ITALY	42,210			42,210
PUERTO RICO	1,650			1,650
UNITED KINGDOM	3,900			3,900
**SPECIFIED OUTSIDE THE USA	50,810			50,810

FISCAL YEAR 1995 MILITARY CONSTRUCTION AND FAMILY HOUSING

NAVY *** SUMMARY BY STATE - COUNTRY

($ THOUSANDS) DATA AS OF FEB 1995

STATE-COUNTRY	ACTIVE FORCES	GUARD AND RESERVE	FAMILY HOUSING	TOTAL
WORLDWIDE UNSPECIFIED	50,380	1,958	1,117,882	1,170,220
WORLDWIDE VARIOUS	-40,000			-40,000
**UNSPECIFIED WORLDWIDE	10,380	1,958	1,117,882	1,130,220
***MILITARY CONSTRUCTION	399,310	22,748	1,205,064	1,627,122

FISCAL YEAR 1995 MILITARY CONSTRUCTION AND FAMILY HOUSING

AIR FORCE *** SUMMARY BY STATE - COUNTRY
($ THOUSANDS) DATA AS OF FEB 1995

STATE-COUNTRY	ACTIVE FORCES	GUARD AND RESERVE	FAMILY HOUSING	TOTAL
ALABAMA	9,600	28,100	2,100	39,800
ALASKA	7,800	5,300		13,100
ARIZONA	4,900	3,700	10,029	18,629
ARKANSAS	4,800	2,640		7,440
CALIFORNIA	37,550	8,200	38,893	84,643
COLORADO	1,750	1,700		3,450
DELAWARE	10,500			10,500
DISTRICT OF COLUMBIA			9,000	9,000
FLORIDA	30,450	9,750	7,145	47,345
GEORGIA	34,600	18,900		53,500
HAWAII		1,000		1,000
IDAHO	15,950	380	6,593	22,923
ILLINOIS	2,700		30,000	32,700
INDIANA		12,950		12,950
IOWA		6,200		6,200
KANSAS	500	8,420	8,322	17,242
KENTUCKY		2,950		2,950
LOUISIANA	15,700	10,100	8,236	34,036
MAINE		10,019		10,019
MARYLAND	6,300			6,300
MASSACHUSETTS		6,100		6,100
MICHIGAN		11,630		11,630
MINNESOTA		8,000		8,000
MISSISSIPPI	24,440	9,300		33,740
MISSOURI	24,290	6,090	567	30,947
MONTANA	7,200	4,300		11,500

FISCAL YEAR 1995 MILITARY CONSTRUCTION AND FAMILY HOUSING

AIR FORCE *** SUMMARY BY STATE - COUNTRY
($ THOUSANDS) DATA AS OF FEB 1995

STATE-COUNTRY	ACTIVE FORCES	GUARD AND RESERVE	FAMILY HOUSING	TOTAL
NEBRASKA	2,260	14,774		17,034
NEVADA	600			600
NEW JERSEY	17,000	10,600		27,600
NEW MEXICO	38,950	900	18,021	57,871
NEW YORK		4,420		4,420
NORTH CAROLINA	9,050	10,598	20,899	40,547
AUTHORIZED IN PRIOR YEAR	(4,000)			(4,000)
NORTH DAKOTA	11,050		709	11,759
OHIO	26,550	10,080		36,630
OKLAHOMA	35,873	10,900		46,773
OREGON		6,350		6,350
PENNSYLVANIA		3,460		3,460
SOUTH CAROLINA	11,400		631	12,031
SOUTH DAKOTA	5,950	2,500		8,450
TENNESSEE	1,900	7,650		9,550
TEXAS	23,950		7,077	31,027
UTAH		400	11,400	11,800
VERMONT		4,800		4,800
VIRGINIA	5,500	4,500	14,421	24,421
WASHINGTON	28,300	1,250	1,035	30,585
WEST VIRGINIA		500		500
WISCONSIN		8,940		8,940
WYOMING	2,650		11,321	13,971
CONUS CLASSIFIED	2,141			2,141
**INSIDE THE USA	462,154	278,351	206,399	946,904
AUTHORIZED IN PRIOR YEAR	(4,000)			(4,000)

FISCAL YEAR 1995 MILITARY CONSTRUCTION AND FAMILY HOUSING

AIR FORCE *** SUMMARY BY STATE - COUNTRY

($ THOUSANDS) DATA AS OF FEB 1995

STATE-COUNTRY	ACTIVE FORCES	GUARD AND RESERVE	FAMILY HOUSING	TOTAL
GERMANY	21,823			21,823
GREENLAND	2,450			2,450
PORTUGAL	2,850			2,850
PUERTO RICO		1,340		1,340
UNITED KINGDOM	7,100			7,100
OVERSEAS CLASSIFIED	4,050			4,050
**SPECIFIED OUTSIDE THE USA	38,273	1,340		39,613
WORLDWIDE UNSPECIFIED	56,386	26,323	895,890	978,599
WORLDWIDE VARIOUS	-40,000	-465		-40,465
**UNSPECIFIED WORLDWIDE	16,386	25,858	895,890	938,134
***MILITARY CONSTRUCTION	516,813	305,549	1,102,289	1,924,651
AUTHORIZED IN PRIOR YEAR	(4,000)			(4,000)

FISCAL YEAR 1995 MILITARY CONSTRUCTION AND FAMILY HOUSING

DEFENSEWIDE *** SUMMARY BY STATE - COUNTRY
($ THOUSANDS) DATA AS OF FEB 1995

STATE-COUNTRY	ACTIVE FORCES	GUARD AND RESERVE	FAMILY HOUSING	TOTAL
ALASKA	66,000			66,000
AUTHORIZED IN PRIOR YEAR	(66,000)			(66,000)
CALIFORNIA	18,780			18,780
DISTRICT OF COLUMBIA	600			600
FLORIDA	20,200			20,200
GEORGIA	13,300			13,300
MARYLAND	18,178			18,178
NEW JERSEY	2,000			2,000
NEW MEXICO	9,600			9,600
NORTH CAROLINA	83,000			83,000
AUTHORIZED IN PRIOR YEAR	(75,000)			(75,000)
OHIO	2,200			2,200
VIRGINIA	129,812			129,812
AUTHORIZED IN PRIOR YEAR	(120,000)			(120,000)
**INSIDE THE USA	363,670			363,670
AUTHORIZED IN PRIOR YEAR	(261,000)			(261,000)
BELGIUM			300	300
**SPECIFIED OUTSIDE THE USA			300	300
WORLDWIDE UNSPECIFIED	3,068,606		29,081	3,097,687
**UNSPECIFIED WORLDWIDE	3,068,606		29,081	3,097,687
***MILITARY CONSTRUCTION	3,432,276		29,381	3,461,657
AUTHORIZED IN PRIOR YEAR	(261,000)			(261,000)

FY 1996 MILITARY CONSTRUCTION TOTAL OBLIGATIONAL AUTHORITY AS REQUESTED

($ THOUSANDS) DATA AS OF FEB 1995

SUMMARY	ACTIVE FORCES ARMY	NAVY	AIR FORCE	DEFWIDE	TOTAL
BY LOCATION:					
SPECIFIED LOCATIONS					
INSIDE THE UNITED STATES	332,780	367,179	406,390	649,647	1,755,996
(MEMO-NON-ADD)		(4,850)	(1,449)		(6,299)
AUTHORIZED IN PRIOR YEAR				(219,000)	(219,000)
OUTSIDE THE UNITED STATES	78,050	69,250	49,400	54,877	251,577
TOTAL SPECIFIED	410,830	436,429	455,790	704,524	2,007,573
(MEMO-NON-ADD)		(4,850)	(1,449)		(6,299)
AUTHORIZED IN PRIOR YEAR				(219,000)	(219,000)
UNSPECIFIED LOCATIONS	61,894	51,657	39,865	4,329,073	4,482,489
*** TOTAL BY LOCATION ***	472,724	488,086	495,655	5,033,597	6,490,062
(MEMO-NON-ADD)		(4,850)	(1,449)		(6,299)
AUTHORIZED IN PRIOR YEAR				(219,000)	(219,000)
BY PURPOSE:					
MAJOR CONSTRUCTION	410,830	436,429	455,790	765,561	2,068,610
(MEMO-NON-ADD)		(4,850)	(1,449)		(6,299)
AUTHORIZED IN PRIOR YEAR				(219,000)	(219,000)
MINOR CONSTRUCTION					
UNSPECIFIED	9,000	7,200	9,030	23,007	48,237
TOTAL MINOR CONSTR.	9,000	7,200	9,030	23,007	48,237
PLANNING AND DESIGN	52,894	44,457	30,835	68,837	197,023
NATO INFRASTRUCTURE				199,000	199,000
BASE RLNMT & CLOSURE ACCT PT II				1,044,143	1,044,143
BASE RLNMT & CLOSURE ACCT PT III				2,148,480	2,148,480
BASE RLNMT & CLOSURE ACCT PT IV				784,569	784,569
*** TOTAL BY PURPOSE ***	472,724	488,086	495,655	5,033,597	6,490,062
(MEMO-NON-ADD)		(4,850)	(1,449)		(6,299)
AUTHORIZED IN PRIOR YEAR				(219,000)	(219,000)

FY 1996 MILITARY CONSTRUCTION TOTAL OBLIGATIONAL AUTHORITY AS REQUESTED

($ THOUSANDS) DATA AS OF FEB 1995

SUMMARY	ARMY	NATIONAL GUARD FORCES NAVY	AIR FORCE	DEFWIDE	TOTAL
BY LOCATION:					
SPECIFIED LOCATIONS					
INSIDE THE UNITED STATES	10,280		71,307		81,587
OUTSIDE THE UNITED STATES			5,660		5,660
TOTAL SPECIFIED	10,280		76,967		87,247
UNSPECIFIED LOCATIONS	8,200		8,680		16,880
*** TOTAL BY LOCATION ***	18,480		85,647		104,127
BY PURPOSE:					
MAJOR CONSTRUCTION	10,280		76,967		87,247
MINOR CONSTRUCTION					
UNSPECIFIED	5,300		4,100		9,400
TOTAL MINOR CONSTR.	5,300		4,100		9,400
PLANNING AND DESIGN	2,900		4,580		7,480
*** TOTAL BY PURPOSE ***	18,480		85,647		104,127

FY 1996 MILITARY CONSTRUCTION TOTAL OBLIGATIONAL AUTHORITY AS REQUESTED

($ THOUSANDS) DATA AS OF FEB 1995

SUMMARY	RESERVE FORCES ARMY	NAVY	AIR FORCE	TOTAL
BY LOCATION:				
SPECIFIED LOCATIONS INSIDE THE UNITED STATES	37,569	4,946	20,133	62,648
TOTAL SPECIFIED	37,569	4,946	20,133	62,648
UNSPECIFIED LOCATIONS	5,394	2,974	6,869	15,237
*** TOTAL BY LOCATION ***	42,963	7,920	27,002	77,885
BY PURPOSE:				
MAJOR CONSTRUCTION	37,569	4,946	20,133	62,648
MINOR CONSTRUCTION UNSPECIFIED	1,700		4,169	5,869
TOTAL MINOR CONSTR.	1,700		4,169	5,869
PLANNING AND DESIGN	3,694	2,974	2,700	9,368
*** TOTAL BY PURPOSE ***	42,963	7,920	27,002	77,885

FY 1996 MILITARY CONSTRUCTION TOTAL OBLIGATIONAL AUTHORITY AS REQUESTED

($ THOUSANDS) DATA AS OF FEB 1995

SUMMARY	TOT GUARD AND RESERVE ARMY	NAVY	AIR FORCE	DEFWIDE	TOTAL
BY LOCATION:					
SPECIFIED LOCATIONS INSIDE THE UNITED STATES	47,849	4,946	91,440		144,235
OUTSIDE THE UNITED STATES			5,660		5,660
TOTAL SPECIFIED	47,849	4,946	97,100		149,895
UNSPECIFIED LOCATIONS	13,594	2,974	15,549		32,117
*** TOTAL BY LOCATION ***	61,443	7,920	112,649		182,012
BY PURPOSE:					
MAJOR CONSTRUCTION	47,849	4,946	97,100		149,895
MINOR CONSTRUCTION UNSPECIFIED	7,000		8,269		15,269
TOTAL MINOR CONSTR.	7,000		8,269		15,269
PLANNING AND DESIGN	6,594	2,974	7,280		16,848
*** TOTAL BY PURPOSE ***	61,443	7,920	112,649		182,012

FY 1996 MILITARY CONSTRUCTION TOTAL OBLIGATIONAL AUTHORITY AS REQUESTED

($ THOUSANDS) DATA AS OF FEB 1995

SUMMARY	***FAMILY HOUSING*** ARMY	NAVY	AIR FORCE	DEFWIDE	TOTAL
BY LOCATION:					
SPECIFIED LOCATIONS					
INSIDE THE UNITED STATES	27,300	193,178	143,355		363,833
OUTSIDE THE UNITED STATES		710	11,600		12,310
TOTAL SPECIFIED	27,300	193,888	154,955		376,143
UNSPECIFIED LOCATIONS	1,592,274	1,320,196	943,261	56,239	3,911,970
*** TOTAL BY LOCATION ***	1,619,574	1,514,084	1,098,216	56,239	4,288,113
BY PURPOSE:					
NEW CONSTRUCTION	27,300	193,888	154,955	22,000	398,143
CONSTRUCTION IMPROVEMENTS	14,200	247,477	85,059	3,772	350,508
PLANNING	2,000	24,390	8,989		35,379
OPERATING EXPENSES					
MANAGEMENT ACCOUNT	84,726	93,170	45,154	231	223,281
SERVICES ACCOUNT	53,243	66,363	33,177	383	153,166
UTILITIES ACCOUNT	271,376	214,537	197,539	746	684,198
FURNISHINGS ACCOUNT	48,822	35,320	43,000	3,400	130,542
MISCELLANEOUS ACCOUNT	1,286	1,252	5,678	36	8,252
TOTAL OPERATING EXPENSES	459,453	410,642	324,548	4,796	1,199,439
LEASING	243,840	103,582	115,665	24,874	487,961
MAINTENANCE	634,292	534,023	408,971	797	1,578,083
INTEREST PAYMENTS, C&W	11				11
MORTGAGE INS., PREMIUMS		82	29		111
HOMEOWNERS	238,478				238,478
*** TOTAL BY PURPOSE ***	1,619,574	1,514,084	1,098,216	56,239	4,288,113

FISCAL YEAR 1996 MILITARY CONSTRUCTION AND FAMILY HOUSING

SUMMARY BY STATE - COUNTRY
($ THOUSANDS)
DATA AS OF FEB 1995

STATE-COUNTRY	ACTIVE FORCES	GUARD AND RESERVE	FAMILY HOUSING	TOTAL
ALABAMA	12,729	11,953		24,682
ALASKA	43,550	4,779	3,000	51,329
AUTHORIZED IN PRIOR YEAR	(28,100)			(28,100)
ARIZONA	34,100	600	9,498	44,198
ARKANSAS	42,500		210	42,710
CALIFORNIA	294,724	7,738	130,667	433,129
(MEMO-NON-ADD)	(600)			(600)
COLORADO	33,614	1,400	570	35,584
DELAWARE	25,454			25,454
DISTRICT OF COLUMBIA	27,343		4,100	31,443
FLORIDA	46,665		15,473	62,138
GEORGIA	81,006	2,020	513	83,539
HAWAII	37,380		48,400	85,780
IDAHO	18,650	320	844	19,814
ILLINOIS	25,140	14,870		40,010
INDIANA		1,500		1,500
KANSAS	9,450	12,226	5,193	26,869
KENTUCKY	5,600			5,600
LOUISIANA	19,700		10,299	29,999
MARYLAND	157,069		1,690	158,759
AUTHORIZED IN PRIOR YEAR	(119,000)			(119,000)
MASSACHUSETTS		4,470		4,470
MICHIGAN		2,900		2,900
MINNESOTA		1,180		1,180
MISSISSIPPI	7,650	1,100	9,300	18,050
MISSOURI	64,900		9,948	74,848
NEVADA	10,500		1,357	11,857

FISCAL YEAR 1996 MILITARY CONSTRUCTION AND FAMILY HOUSING

SUMMARY BY STATE - COUNTRY
($ THOUSANDS)
DATA AS OF FEB 1995

STATE-COUNTRY	ACTIVE FORCES	GUARD AND RESERVE	FAMILY HOUSING	TOTAL
NEW JERSEY	22,900	7,450		30,350
NEW MEXICO	19,576	6,020	11,225	36,821
NEW YORK	680	12,061	16,500	29,241
NORTH CAROLINA	126,760	2,713	11,191	140,664
NORTH DAKOTA	16,350			16,350
OHIO	76,503	9,590		86,093
OKLAHOMA	12,600	9,200		21,800
OREGON	55,000			55,000
PENNSYLVANIA	6,243	5,332	300	11,875
SOUTH CAROLINA	72,076		715	72,791
SOUTH DAKOTA		4,000		4,000
TENNESSEE	5,000	6,490		11,490
TEXAS	102,144	1,400	8,126	111,670
(MEMO-NON-ADD)	(586)			(586)
UTAH		340		340
VIRGINIA	153,870	4,700	44,410	202,980
(MEMO-NON-ADD)	(5,113)			(5,113)
AUTHORIZED IN PRIOR YEAR	(71,900)			(71,900)
WASHINGTON	64,270		20,304	84,574
WISCONSIN		7,193		7,193
WYOMING	9,000	690		9,690
CONUS CLASSIFIED	14,100			14,100
CONUS VARIOUS	1,200			1,200
**INSIDE THE USA	1,755,996	144,235	363,833	2,264,064
(MEMO-NON-ADD)	(6,299)			(6,299)
AUTHORIZED IN PRIOR YEAR	(219,000)			(219,000)

FISCAL YEAR 1996 MILITARY CONSTRUCTION AND FAMILY HOUSING

SUMMARY BY STATE - COUNTRY
($ THOUSANDS)
DATA AS OF FEB 1995

STATE-COUNTRY	ACTIVE FORCES	GUARD AND RESERVE	FAMILY HOUSING	TOTAL
GERMANY	30,185			30,185
GREECE	1,950			1,950
GUAM	27,230		1,700	28,930
ITALY	53,515			53,515
KOREA	30,050			30,050
PUERTO RICO	19,900	5,660	710	26,270
SPAIN	7,400			7,400
TURKEY	11,500		9,900	21,400
UNITED KINGDOM	4,747			4,747
OVERSEAS CLASSIFIED	17,100			17,100
OVERSEAS VARIOUS	48,000			48,000
**SPECIFIED OUTSIDE THE USA	251,577	5,660	12,310	269,547
WORLDWIDE UNSPECIFIED	4,482,489	32,117	3,911,970	8,426,576
**UNSPECIFIED WORLDWIDE	4,482,489	32,117	3,911,970	8,426,576
***MILITARY CONSTRUCTION	6,490,062	182,012	4,288,113	10,960,187
(MEMO-NON-ADD)	(6,299)			(6,299)
AUTHORIZED IN PRIOR YEAR	(219,000)			(219,000)

FISCAL YEAR 1996 MILITARY CONSTRUCTION AND FAMILY HOUSING

ARMY *** SUMMARY BY STATE - COUNTRY
($ THOUSANDS) DATA AS OF FEB 1995

STATE-COUNTRY	ACTIVE FORCES	GUARD AND RESERVE	FAMILY HOUSING	TOTAL
ALABAMA		2,500		2,500
ALASKA		4,779		4,779
ARIZONA	16,000			16,000
CALIFORNIA	18,500	5,868		24,368
COLORADO	10,850			10,850
DISTRICT OF COLUMBIA	13,500			13,500
GEORGIA	52,050			52,050
ILLINOIS		9,510		9,510
KANSAS		11,426		11,426
KENTUCKY	5,600			5,600
MISSISSIPPI		1,100		1,100
NEW YORK	680		16,500	17,180
NORTH CAROLINA	29,700	2,713		32,413
OKLAHOMA	6,300	2,400		8,700
SOUTH CAROLINA	57,700			57,700
TEXAS	65,500			65,500
UTAH		340		340
VIRGINIA	22,400			22,400
WASHINGTON	32,100		10,800	42,900
WISCONSIN		6,523		6,523
WYOMING		690		690
CONUS CLASSIFIED	1,900			1,900
**INSIDE THE USA	332,780	47,849	27,300	407,929
KOREA	30,050			30,050

FISCAL YEAR 1996 MILITARY CONSTRUCTION AND FAMILY HOUSING

ARMY *** SUMMARY BY STATE - COUNTRY

($ THOUSANDS) DATA AS OF FEB 1995

STATE-COUNTRY	ACTIVE FORCES	GUARD AND RESERVE	FAMILY HOUSING	TOTAL
OVERSEAS VARIOUS	48,000			48,000
**SPECIFIED OUTSIDE THE USA	78,050			78,050
WORLDWIDE UNSPECIFIED	61,894	13,594	1,592,274	1,667,762
**UNSPECIFIED WORLDWIDE	61,894	13,594	1,592,274	1,667,762
***MILITARY CONSTRUCTION	472,724	61,443	1,619,574	2,153,741

FISCAL YEAR 1996 MILITARY CONSTRUCTION AND FAMILY HOUSING

NAVY *** SUMMARY BY STATE - COUNTRY
($ THOUSANDS) DATA AS OF FEB 1995

STATE-COUNTRY	ACTIVE FORCES	GUARD AND RESERVE	FAMILY HOUSING	TOTAL
CALIFORNIA	166,974		97,375	264,349
FLORIDA	18,715			18,715
GEORGIA	2,450			2,450
HAWAII	26,680		48,400	75,080
ILLINOIS	12,440			12,440
MARYLAND	3,600		1,690	5,290
MASSACHUSETTS		2,120		2,120
NEW JERSEY	1,700			1,700
NEW YORK		2,826		2,826
NORTH CAROLINA	85,380		1,003	86,383
PENNSYLVANIA			300	300
VIRGINIA	33,270		44,410	77,680
(MEMO-NON-ADD)	(4,850)			(4,850)
WASHINGTON	14,770			14,770
CONUS VARIOUS	1,200			1,200
**INSIDE THE USA	367,179	4,946	193,178	565,303
(MEMO-NON-ADD)	(4,850)			(4,850)
GUAM	18,430			18,430
ITALY	37,120			37,120
PUERTO RICO	13,700		710	14,410
**SPECIFIED OUTSIDE THE USA	69,250		710	69,960
WORLDWIDE UNSPECIFIED	51,657	2,974	1,320,196	1,374,827
**UNSPECIFIED WORLDWIDE	51,657	2,974	1,320,196	1,374,827
***MILITARY CONSTRUCTION	488,086	7,920	1,514,084	2,010,090
(MEMO-NON-ADD)	(4,850)			(4,850)

FISCAL YEAR 1996 MILITARY CONSTRUCTION AND FAMILY HOUSING

AIR FORCE *** SUMMARY BY STATE - COUNTRY
($ THOUSANDS) DATA AS OF FEB 1995

STATE-COUNTRY	ACTIVE FORCES	GUARD AND RESERVE	FAMILY HOUSING	TOTAL
ALABAMA	3,700	9,453		13,153
ALASKA	15,450		3,000	18,450
ARIZONA	10,000	600	9,498	20,098
ARKANSAS	2,500		210	2,710
CALIFORNIA	74,000	1,870	33,292	109,162
(MEMO-NON-ADD)	(600)			(600)
COLORADO	22,764	1,400	570	24,734
DELAWARE	5,500			5,500
DISTRICT OF COLUMBIA	12,100		4,100	16,200
FLORIDA	9,000		15,473	24,473
GEORGIA	19,790	2,020	513	22,323
HAWAII	10,700			10,700
IDAHO	18,650	320	844	19,814
ILLINOIS	12,700	5,360		18,060
INDIANA		1,500		1,500
KANSAS	9,450	800	5,193	15,443
LOUISIANA	2,500		10,299	12,799
MARYLAND	12,886			12,886
MASSACHUSETTS		2,350		2,350
MICHIGAN		2,900		2,900
MINNESOTA		1,180		1,180
MISSISSIPPI	7,650		9,300	16,950
MISSOURI	24,600		9,948	34,548
NEVADA	10,500		1,357	11,857
NEW JERSEY	9,200	7,450		16,650
NEW MEXICO	19,576	6,020	11,225	36,821

FISCAL YEAR 1996 MILITARY CONSTRUCTION AND FAMILY HOUSING

AIR FORCE *** SUMMARY BY STATE - COUNTRY
($ THOUSANDS) DATA AS OF FEB 1995

STATE-COUNTRY	ACTIVE FORCES	GUARD AND RESERVE	FAMILY HOUSING	TOTAL
NEW YORK		9,235		9,235
NORTH CAROLINA	9,080		10,188	19,268
NORTH DAKOTA	16,350			16,350
OHIO	4,100	9,590		13,690
OKLAHOMA	6,300	6,800		13,100
PENNSYLVANIA		5,332		5,332
SOUTH CAROLINA	13,800		715	14,515
SOUTH DAKOTA		4,000		4,000
TENNESSEE	5,000	6,490		11,490
TEXAS	10,444	1,400	8,126	19,970
(MEMO-NON-ADD)	(586)			(586)
VIRGINIA	1,000	4,700		5,700
(MEMO-NON-ADD)	(263)			(263)
WASHINGTON	17,400		9,504	26,904
WISCONSIN		670		670
WYOMING	9,000			9,000
CONUS CLASSIFIED	700			700
**INSIDE THE USA	406,390	91,440	143,355	641,185
(MEMO-NON-ADD)	(1,449)			(1,449)
GERMANY	10,980			10,980
GREECE	1,950			1,950
GUAM			1,700	1,700
ITALY	3,800			3,800
PUERTO RICO		5,660		5,660
TURKEY	11,500		9,900	21,400
UNITED KINGDOM	4,070			4,070

FISCAL YEAR 1996 MILITARY CONSTRUCTION AND FAMILY HOUSING

AIR FORCE *** SUMMARY BY STATE - COUNTRY
($ THOUSANDS) DATA AS OF FEB 1995

STATE-COUNTRY	ACTIVE FORCES	GUARD AND RESERVE	FAMILY HOUSING	TOTAL
OVERSEAS CLASSIFIED	17,100			17,100
**SPECIFIED OUTSIDE THE USA	49,400	5,660	11,600	66,660
WORLDWIDE UNSPECIFIED	39,865	15,549	943,261	998,675
**UNSPECIFIED WORLDWIDE	39,865	15,549	943,261	998,675
***MILITARY CONSTRUCTION	495,655	112,649	1,098,216	1,706,520
(MEMO-NON-ADD)	(1,449)			(1,449)

FISCAL YEAR 1996 MILITARY CONSTRUCTION AND FAMILY HOUSING

DEFENSEWIDE *** SUMMARY BY STATE - COUNTRY
($ THOUSANDS) DATA AS OF FEB 1995

STATE-COUNTRY	ACTIVE FORCES	GUARD AND RESERVE	FAMILY HOUSING	TOTAL
ALABAMA	9,029			9,029
ALASKA	28,100			28,100
AUTHORIZED IN PRIOR YEAR	(28,100)			(28,100)
ARIZONA	8,100			8,100
ARKANSAS	40,000			40,000
CALIFORNIA	35,250			35,250
DELAWARE	19,954			19,954
DISTRICT OF COLUMBIA	1,743			1,743
FLORIDA	18,950			18,950
GEORGIA	6,716			6,716
LOUISIANA	17,200			17,200
MARYLAND	140,583			140,583
AUTHORIZED IN PRIOR YEAR	(119,000)			(119,000)
MISSOURI	40,300			40,300
NEW JERSEY	12,000			12,000
NORTH CAROLINA	2,600			2,600
OHIO	72,403			72,403
OREGON	55,000			55,000
PENNSYLVANIA	6,243			6,243
SOUTH CAROLINA	576			576
TEXAS	26,200			26,200
VIRGINIA	97,200			97,200
AUTHORIZED IN PRIOR YEAR	(71,900)			(71,900)
CONUS CLASSIFIED	11,500			11,500
**INSIDE THE USA	649,647			649,647
AUTHORIZED IN PRIOR YEAR	(219,000)			(219,000)

FISCAL YEAR 1996 MILITARY CONSTRUCTION AND FAMILY HOUSING

DEFENSEWIDE *** SUMMARY BY STATE - COUNTRY
($ THOUSANDS) DATA AS OF FEB 1995

STATE-COUNTRY	ACTIVE FORCES	GUARD AND RESERVE	FAMILY HOUSING	TOTAL
GERMANY	19,205			19,205
GUAM	8,800			8,800
ITALY	12,595			12,595
PUERTO RICO	6,200			6,200
SPAIN	7,400			7,400
UNITED KINGDOM	677			677
**SPECIFIED OUTSIDE THE USA	54,877			54,877
WORLDWIDE UNSPECIFIED	4,329,073		56,239	4,385,312
**UNSPECIFIED WORLDWIDE	4,329,073		56,239	4,385,312
***MILITARY CONSTRUCTION	5,033,597		56,239	5,089,836
AUTHORIZED IN PRIOR YEAR	(219,000)			(219,000)

FY 1997 MILITARY CONSTRUCTION TOTAL OBLIGATIONAL AUTHORITY AS REQUESTED

($ THOUSANDS) DATA AS OF FEB 1995

SUMMARY	ACTIVE FORCES ARMY	NAVY	AIR FORCE	DEFWIDE	TOTAL
BY LOCATION:					
SPECIFIED LOCATIONS					
INSIDE THE UNITED STATES	308,700	382,753	391,031	736,687	1,819,171
AUTHORIZED IN PRIOR YEAR				(89,000)	(89,000)
OUTSIDE THE UNITED STATES	94,000	23,420	46,176	43,413	207,009
TOTAL SPECIFIED	402,700	406,173	437,207	780,100	2,026,180
AUTHORIZED IN PRIOR YEAR				(89,000)	(89,000)
UNSPECIFIED LOCATIONS	89,382	54,310	41,745	2,714,097	2,899,534
*** TOTAL BY LOCATION ***	492,082	460,483	478,952	3,494,197	4,925,714
AUTHORIZED IN PRIOR YEAR				(89,000)	(89,000)
BY PURPOSE:					
MAJOR CONSTRUCTION	402,700	406,173	437,207	836,866	2,082,946
AUTHORIZED IN PRIOR YEAR				(89,000)	(89,000)
MINOR CONSTRUCTION					
UNSPECIFIED	5,000	7,400	9,328	21,524	43,252
TOTAL MINOR CONSTR.	5,000	7,400	9,328	21,524	43,252
PLANNING AND DESIGN	84,382	46,410	32,417	64,886	228,095
SUPPORTING ACTIVITIES		500			500
NATO INFRASTRUCTURE				199,000	199,000
BASE RLNMT & CLOSURE ACCT PT II				255,957	255,957
BASE RLNMT & CLOSURE ACCT PT III				1,291,764	1,291,764
BASE RLNMT & CLOSURE ACCT PT IV				824,200	824,200
*** TOTAL BY PURPOSE ***	492,082	460,483	478,952	3,494,197	4,925,714
AUTHORIZED IN PRIOR YEAR				(89,000)	(89,000)

FY 1997 MILITARY CONSTRUCTION TOTAL OBLIGATIONAL AUTHORITY AS REQUESTED

($ THOUSANDS) DATA AS OF FEB 1995

SUMMARY	ARMY	NATIONAL GUARD FORCES NAVY	AIR FORCE	DEFWIDE	TOTAL
BY LOCATION:					
SPECIFIED LOCATIONS					
INSIDE THE UNITED STATES	4,900		76,086		80,986
OUTSIDE THE UNITED STATES			460		460
TOTAL SPECIFIED	4,900		76,546		81,446
UNSPECIFIED LOCATIONS	9,400		8,825		18,225
*** TOTAL BY LOCATION ***	14,300		85,371		99,671
BY PURPOSE:					
MAJOR CONSTRUCTION	4,900		76,546		81,446
MINOR CONSTRUCTION					
UNSPECIFIED	5,500		4,100		9,600
TOTAL MINOR CONSTR.	5,500		4,100		9,600
PLANNING AND DESIGN	3,900		4,725		8,625
*** TOTAL BY PURPOSE ***	14,300		85,371		99,671

FY 1997 MILITARY CONSTRUCTION TOTAL OBLIGATIONAL AUTHORITY AS REQUESTED

($ THOUSANDS) DATA AS OF FEB 1995

SUMMARY	RESERVE FORCES ARMY	NAVY	AIR FORCE	TOTAL
BY LOCATION:				
SPECIFIED LOCATIONS INSIDE THE UNITED STATES	47,879	8,971	23,567	80,417
TOTAL SPECIFIED	47,879	8,971	23,567	80,417
UNSPECIFIED LOCATIONS	7,280	111	6,726	14,117
*** TOTAL BY LOCATION ***	55,159	9,082	30,293	94,534
BY PURPOSE:				
MAJOR CONSTRUCTION	47,879	8,971	23,567	80,417
MINOR CONSTRUCTION UNSPECIFIED	3,800		4,326	8,126
TOTAL MINOR CONSTR.	3,800		4,326	8,126
PLANNING AND DESIGN	3,480	111	2,400	5,991
*** TOTAL BY PURPOSE ***	55,159	9,082	30,293	94,534

FY 1997 MILITARY CONSTRUCTION TOTAL OBLIGATIONAL AUTHORITY AS REQUESTED

($ THOUSANDS) DATA AS OF FEB 1995

SUMMARY	TOT GUARD AND RESERVE ARMY	NAVY	AIR FORCE	DEFWIDE	TOTAL
BY LOCATION:					
SPECIFIED LOCATIONS					
INSIDE THE UNITED STATES	52,779	8,971	99,653		161,403
OUTSIDE THE UNITED STATES			460		460
TOTAL SPECIFIED	52,779	8,971	100,113		161,863
UNSPECIFIED LOCATIONS	16,680	111	15,551		32,342
*** TOTAL BY LOCATION ***	69,459	9,082	115,664		194,205
BY PURPOSE:					
MAJOR CONSTRUCTION	52,779	8,971	100,113		161,863
MINOR CONSTRUCTION					
UNSPECIFIED	9,300		8,426		17,726
TOTAL MINOR CONSTR.	9,300		8,426		17,726
PLANNING AND DESIGN	7,380	111	7,125		14,616
*** TOTAL BY PURPOSE ***	69,459	9,082	115,664		194,205

FY 1997 MILITARY CONSTRUCTION TOTAL OBLIGATIONAL AUTHORITY AS REQUESTED

($ THOUSANDS) DATA AS OF FEB 1995

SUMMARY	***FAMILY HOUSING*** ARMY	NAVY	AIR FORCE	DEFWIDE	TOTAL
BY LOCATION:					
SPECIFIED LOCATIONS					
INSIDE THE UNITED STATES	99,000	208,576	161,531		469,107
TOTAL SPECIFIED	99,000	208,576	161,531		469,107
UNSPECIFIED LOCATIONS	1,467,103	1,245,181	954,564	329,569	3,996,417
*** TOTAL BY LOCATION ***	1,566,103	1,453,757	1,116,095	329,569	4,465,524
BY PURPOSE:					
NEW CONSTRUCTION	100,000	208,576	161,531		470,107
CONSTRUCTION IMPROVEMENTS	66,570	190,819	87,817	298,754	643,960
PLANNING	5,343	27,674	9,590		42,607
OPERATING EXPENSES					
MANAGEMENT ACCOUNT	86,401	98,066	45,454	236	230,157
SERVICES ACCOUNT	54,246	66,551	33,412	387	154,596
UTILITIES ACCOUNT	274,890	189,839	196,957	740	662,426
FURNISHINGS ACCOUNT	49,985	35,067	43,278	3,236	131,566
MISCELLANEOUS ACCOUNT	1,273	1,290	5,711	35	8,309
TOTAL OPERATING EXPENSES	466,795	390,813	324,812	4,634	1,187,054
LEASING	249,930	114,710	118,048	25,453	508,141
MAINTENANCE	511,114	521,085	414,267	728	1,447,194
INTEREST PAYMENTS, C&W	11				11
MORTGAGE INS., PREMIUMS		80	30		110
HOMEOWNERS	166,340				166,340
*** TOTAL BY PURPOSE ***	1,566,103	1,453,757	1,116,095	329,569	4,465,524

FISCAL YEAR 1997 MILITARY CONSTRUCTION AND FAMILY HOUSING

SUMMARY BY STATE - COUNTRY
($ THOUSANDS)
DATA AS OF FEB 1995

STATE-COUNTRY	ACTIVE FORCES	GUARD AND RESERVE	FAMILY HOUSING	TOTAL
ALABAMA		8,160	12,000	20,160
ALASKA	40,473		24,979	65,452
ARIZONA	4,500		747	5,247
ARKANSAS	88,400			88,400
CALIFORNIA	342,583	4,565	164,746	511,894
COLORADO	100,820	3,460	19,000	123,280
CONNECTICUT	10,700			10,700
DISTRICT OF COLUMBIA	13,866	2,901	5,000	21,767
FLORIDA	57,248	1,980	12,062	71,290
GEORGIA	45,150	29,490	5,763	80,403
HAWAII	90,090		96,730	186,820
IDAHO	8,000			8,000
ILLINOIS	21,300	3,685		24,985
INDIANA		500		500
KANSAS	60,600	13,745		74,345
KENTUCKY	11,100		18,500	29,600
LOUISIANA	9,330	3,570	10,092	22,992
MAINE	9,200			9,200
MARYLAND	64,740	2,294	1,285	68,319
MASSACHUSETTS	2,750	740	4,875	8,365
MICHIGAN		3,600		3,600
MINNESOTA		4,637		4,637
MISSISSIPPI			6,500	6,500
MISSOURI	1,200		9,451	10,651
MONTANA	2,000			2,000
NEBRASKA	8,600	3,100	1,719	13,419

FISCAL YEAR 1997 MILITARY CONSTRUCTION AND FAMILY HOUSING

SUMMARY BY STATE - COUNTRY
($ THOUSANDS)
DATA AS OF FEB 1995

STATE-COUNTRY	ACTIVE FORCES	GUARD AND RESERVE	FAMILY HOUSING	TOTAL
NEVADA	3,900			3,900
NEW JERSEY	6,200	3,250		9,450
NEW MEXICO	1,500	2,900	6,339	10,739
NEW YORK	12,600	5,230		17,830
NORTH CAROLINA	200,775	12,216	870	213,861
AUTHORIZED IN PRIOR YEAR	(89,000)			(89,000)
NORTH DAKOTA	16,426	3,650	19,400	39,476
OHIO	20,200	1,990		22,190
OKLAHOMA	36,630	3,625		40,255
OREGON	119,000			119,000
PENNSYLVANIA		11,230		11,230
RHODE ISLAND		2,500		2,500
SOUTH CAROLINA	51,160			51,160
SOUTH DAKOTA	3,400			3,400
TENNESSEE	3,800			3,800
TEXAS	103,050		20,300	123,350
UTAH		2,960		2,960
VIRGINIA	101,930	12,142	4,590	118,662
WASHINGTON	105,200		24,159	129,359
WISCONSIN	10,250	4,303		14,553
CONUS CLASSIFIED	30,500	4,980		35,480
CONUS UNSPECIFIED		4,000		4,000
**INSIDE THE USA	1,819,171	161,403	469,107	2,449,681
AUTHORIZED IN PRIOR YEAR	(89,000)			(89,000)

FISCAL YEAR 1997 MILITARY CONSTRUCTION AND FAMILY HOUSING

SUMMARY BY STATE - COUNTRY
($ THOUSANDS)
DATA AS OF FEB 1995

STATE-COUNTRY	ACTIVE FORCES	GUARD AND RESERVE	FAMILY HOUSING	TOTAL
BAHRAIN ISLAND	4,600			4,600
GERMANY	3,400			3,400
GREENLAND	5,300			5,300
GUAM	18,000			18,000
ITALY	4,200			4,200
KOREA	30,000			30,000
KWAJALEIN	4,700			4,700
PUERTO RICO	18,490	460		18,950
SPAIN	11,300			11,300
TURKEY	1,800			1,800
UNITED KINGDOM	21,693			21,693
OVERSEAS CLASSIFIED	19,526			19,526
OVERSEAS VARIOUS	64,000			64,000
**SPECIFIED OUTSIDE THE USA	207,009	460		207,469
WORLDWIDE UNSPECIFIED	2,899,534	32,342	3,996,417	6,928,293
**UNSPECIFIED WORLDWIDE	2,899,534	32,342	3,996,417	6,928,293
***MILITARY CONSTRUCTION	4,925,714	194,205	4,465,524	9,585,443
AUTHORIZED IN PRIOR YEAR	(89,000)			(89,000)

FISCAL YEAR 1997 MILITARY CONSTRUCTION AND FAMILY HOUSING

ARMY *** SUMMARY BY STATE - COUNTRY
($ THOUSANDS) DATA AS OF FEB 1995

STATE-COUNTRY	ACTIVE FORCES	GUARD AND RESERVE	FAMILY HOUSING	TOTAL
ALABAMA			12,000	12,000
CALIFORNIA	20,000			20,000
COLORADO	37,000		19,000	56,000
DISTRICT OF COLUMBIA	6,900			6,900
GEORGIA	6,000			6,000
HAWAII	35,000		30,000	65,000
KANSAS	58,900	8,389		67,289
KENTUCKY			18,500	18,500
MINNESOTA		4,277		4,277
NEBRASKA		1,250		1,250
NORTH CAROLINA		10,266		10,266
NORTH DAKOTA		3,650		3,650
OKLAHOMA		3,125		3,125
PENNSYLVANIA		11,230		11,230
TEXAS	55,900		19,500	75,400
VIRGINIA	12,000	10,592		22,592
WASHINGTON	77,000			77,000
**INSIDE THE USA	308,700	52,779	99,000	460,479
KOREA	30,000			30,000
OVERSEAS VARIOUS	64,000			64,000
**SPECIFIED OUTSIDE THE USA	94,000			94,000
WORLDWIDE UNSPECIFIED	89,382	16,680	1,467,103	1,573,165
**UNSPECIFIED WORLDWIDE	89,382	16,680	1,467,103	1,573,165
***MILITARY CONSTRUCTION	492,082	69,459	1,566,103	2,127,644

FISCAL YEAR 1997 MILITARY CONSTRUCTION AND FAMILY HOUSING

NAVY *** SUMMARY BY STATE - COUNTRY
($ THOUSANDS)
DATA AS OF FEB 1995

STATE-COUNTRY	ACTIVE FORCES	GUARD AND RESERVE	FAMILY HOUSING	TOTAL
ARIZONA			747	747
CALIFORNIA	179,398		117,554	296,952
CONNECTICUT	10,700			10,700
DISTRICT OF COLUMBIA		2,901		2,901
FLORIDA	12,500			12,500
HAWAII	40,640		66,730	107,370
LOUISIANA		3,570		3,570
MARYLAND	2,500		1,285	3,785
NORTH CAROLINA	51,825		870	52,695
TEXAS	7,700			7,700
UTAH		2,500		2,500
VIRGINIA	72,990		4,590	77,580
WASHINGTON	4,500		16,800	21,300
**INSIDE THE USA	382,753	8,971	208,576	600,300
PUERTO RICO	18,490			18,490
UNITED KINGDOM	4,930			4,930
**SPECIFIED OUTSIDE THE USA	23,420			23,420
WORLDWIDE UNSPECIFIED	54,310	111	1,245,181	1,299,602
**UNSPECIFIED WORLDWIDE	54,310	111	1,245,181	1,299,602
***MILITARY CONSTRUCTION	460,483	9,082	1,453,757	1,923,322

FISCAL YEAR 1997 MILITARY CONSTRUCTION AND FAMILY HOUSING

AIR FORCE *** SUMMARY BY STATE - COUNTRY ($ THOUSANDS) DATA AS OF FEB 1995

STATE-COUNTRY	ACTIVE FORCES	GUARD AND RESERVE	FAMILY HOUSING	TOTAL
ALABAMA		8,160		8,160
ALASKA	22,973		24,979	47,952
ARIZONA	4,500			4,500
ARKANSAS	16,400			16,400
CALIFORNIA	42,810	4,565	47,192	94,567
COLORADO	18,820	3,460		22,280
DISTRICT OF COLUMBIA			5,000	5,000
FLORIDA	25,998	1,980	12,062	40,040
GEORGIA	39,150	29,490	5,763	74,403
HAWAII	3,150			3,150
IDAHO	8,000			8,000
ILLINOIS		3,685		3,685
INDIANA		500		500
KANSAS		5,356		5,356
LOUISIANA	3,600		10,092	13,692
MARYLAND	8,700	2,294		10,994
MASSACHUSETTS		740	4,875	5,615
MICHIGAN		3,600		3,600
MINNESOTA		360		360
MISSISSIPPI			6,500	6,500
MISSOURI	1,200		9,451	10,651
MONTANA	2,000			2,000
NEBRASKA	1,200	1,850	1,719	4,769
NEVADA	1,350			1,350
NEW JERSEY	6,200	3,250		9,450
NEW MEXICO	1,500	2,900	6,339	10,739

FISCAL YEAR 1997 MILITARY CONSTRUCTION AND FAMILY HOUSING

AIR FORCE *** SUMMARY BY STATE - COUNTRY
($ THOUSANDS)
DATA AS OF FEB 1995

STATE-COUNTRY	ACTIVE FORCES	GUARD AND RESERVE	FAMILY HOUSING	TOTAL
NEW YORK		5,230		5,230
NORTH CAROLINA	20,550	1,950		22,500
NORTH DAKOTA	6,500		19,400	25,900
OHIO	19,400	1,990		21,390
OKLAHOMA	20,580	500		21,080
RHODE ISLAND		2,500		2,500
SOUTH CAROLINA	42,610			42,610
SOUTH DAKOTA	3,400			3,400
TENNESSEE	3,800			3,800
TEXAS	34,500		800	35,300
UTAH		460		460
VIRGINIA	8,440	1,550		9,990
WASHINGTON	23,700		7,359	31,059
WISCONSIN		4,303		4,303
CONUS CLASSIFIED		4,980		4,980
CONUS UNSPECIFIED		4,000		4,000
**INSIDE THE USA	391,031	99,653	161,531	652,215
GERMANY	3,400			3,400
GREENLAND	5,300			5,300
PUERTO RICO		460		460
TURKEY	1,800			1,800
UNITED KINGDOM	16,150			16,150
OVERSEAS CLASSIFIED	19,526			19,526
**SPECIFIED OUTSIDE THE USA	46,176	460		46,636

FISCAL YEAR 1997 MILITARY CONSTRUCTION AND FAMILY HOUSING

AIR FORCE *** SUMMARY BY STATE - COUNTRY

($ THOUSANDS) DATA AS OF FEB 1995

STATE-COUNTRY	ACTIVE FORCES	GUARD AND RESERVE	FAMILY HOUSING	TOTAL
WORLDWIDE UNSPECIFIED	41,745	15,551	954,564	1,011,860
**UNSPECIFIED WORLDWIDE	41,745	15,551	954,564	1,011,860
***MILITARY CONSTRUCTION	478,952	115,664	1,116,095	1,710,711

FISCAL YEAR 1997 MILITARY CONSTRUCTION AND FAMILY HOUSING

DEFENSEWIDE *** SUMMARY BY STATE - COUNTRY
($ THOUSANDS) DATA AS OF FEB 1995

STATE-COUNTRY	ACTIVE FORCES	GUARD AND RESERVE	FAMILY HOUSING	TOTAL
ALASKA	17,500			17,500
ARKANSAS	72,000			72,000
CALIFORNIA	100,375			100,375
COLORADO	45,000			45,000
DISTRICT OF COLUMBIA	6,966			6,966
FLORIDA	18,750			18,750
HAWAII	11,300			11,300
ILLINOIS	21,300			21,300
KANSAS	1,700			1,700
KENTUCKY	11,100			11,100
LOUISIANA	5,730			5,730
MAINE	9,200			9,200
MARYLAND	53,540			53,540
MASSACHUSETTS	2,750			2,750
NEBRASKA	7,400			7,400
NEVADA	2,550			2,550
NEW YORK	12,600			12,600
NORTH CAROLINA	128,400			128,400
AUTHORIZED IN PRIOR YEAR	(89,000)			(89,000)
NORTH DAKOTA	9,926			9,926
OHIO	800			800
OKLAHOMA	16,050			16,050
OREGON	119,000			119,000
SOUTH CAROLINA	8,550			8,550
TEXAS	4,950			4,950
VIRGINIA	8,500			8,500

FISCAL YEAR 1997 MILITARY CONSTRUCTION AND FAMILY HOUSING

DEFENSEWIDE *** SUMMARY BY STATE - COUNTRY
($ THOUSANDS) DATA AS OF FEB 1995

STATE-COUNTRY	ACTIVE FORCES	GUARD AND RESERVE	FAMILY HOUSING	TOTAL
WISCONSIN	10,250			10,250
CONUS CLASSIFIED	30,500			30,500
**INSIDE THE USA	736,687			736,687
AUTHORIZED IN PRIOR YEAR	(89,000)			(89,000)
BAHRAIN ISLAND	4,600			4,600
GUAM	18,000			18,000
ITALY	4,200			4,200
KWAJALEIN	4,700			4,700
SPAIN	11,300			11,300
UNITED KINGDOM	613			613
**SPECIFIED OUTSIDE THE USA	43,413			43,413
WORLDWIDE UNSPECIFIED	2,714,097		329,569	3,043,666
**UNSPECIFIED WORLDWIDE	2,714,097		329,569	3,043,666
***MILITARY CONSTRUCTION	3,494,197		329,569	3,823,766
AUTHORIZED IN PRIOR YEAR	(89,000)			(89,000)

FY 1994 MILITARY CONSTRUCTION TOTAL OBLIGATIONAL AUTHORITY AS ENACTED

ACTIVE, GUARD AND RESERVE FORCES — DATA AS OF FEB 1995
INSIDE THE UNITED STATES
($ THOUSANDS)

STATE/COMP./INSTALLATION ----------PROJECT NAME----------	PROJ COST	TOTAL
ALABAMA		
ARMY		
ANNISTON ARMY DEPOT		
AMMUNITION DEMILITARIZATION FAC PH IV	110,900	
ANNISTON ARMY DEPOT		110,900
FORT RUCKER		
OPERATIONS FACILITY	1,150	
PERSONNEL SERVICES FACILITY	14,400	
PETROLEUM LAB AND FUEL STORAGE	5,800	
ROAD IMPROVEMENT	1,300	
WHOLE BARRACKS RENEWAL	20,000	
FORT RUCKER		42,650
**ARMY		153,550
AIR FORCE		
GUNTER AFB		
CHILD DEVELOPMENT CENTER	2,700	
EMERGENCY POWER GENERATOR PLANT	1,200	
HAZARDOUS WASTE ACCUMULATION FACILITY	310	
SPILL CONTAINMENT CONTROLS	470	
GUNTER AFB		4,680
MAXWELL AFB		
AIR FORCE QUALITY CENTER	4,650	
*EXTEND RUNWAY/UPGRADE	5,000	
SPILL CONTAINMENT CONTROLS	655	
TAXIWAY/RAMP	3,800	
UNDERGROUND FUEL STORAGE TANKS	1,517	
UPGRADE UTILITY SYSTEMS, PHASE 1	5,050	
MAXWELL AFB		20,672
AUTHORIZED FOR APPROPRIATION IN PRIOR YEAR		(5,000)
**AIR FORCE		25,352
AUTHORIZED FOR APPROPRIATION IN PRIOR YEAR		(5,000)
DOD DEPENDENT SCHOOLS		
FORT MCCLELLAN		
FT MCCLELLAN ELEM SCHOOL ADDN	2,798	
FORT MCCLELLAN		2,798
ARMY NATIONAL GUARD		
BIRMINGHAM		
AASF ADDITION	4,907	
BIRMINGHAM		4,907
CULLMAN		
CSMS ADDITION	5,070	
CULLMAN		5,070
MOBILE		
ORGANIZATIONAL MAINT SHOP	502	
MOBILE		502
MONTGOMERY		
OMS ADD/ALT	389	
MONTGOMERY		389
**ARMY NATIONAL GUARD		10,868
AIR NATIONAL GUARD		
ABSTON ANG STATION		
COMMUNICATIONS & ELECTRONICS TRAINING FAC	693	
ABSTON ANG STATION		693
BIRMINGHAM MAP		
AIRCRAFT MAINTENANCE HANGAR	5,500	

* AUTHORIZED FOR APPROPRIATION IN PRIOR YEAR

FY 1994 MILITARY CONSTRUCTION TOTAL OBLIGATIONAL AUTHORITY AS ENACTED

ACTIVE, GUARD AND RESERVE FORCES INSIDE THE UNITED STATES ($ THOUSANDS) — DATA AS OF FEB 1995

STATE/COMP./INSTALLATION ----------PROJECT NAME----------	PROJ COST	TOTAL
ALABAMA		
AIR NATIONAL GUARD		
BIRMINGHAM MAP		
FUEL CELL DOCK	4,400	
ROAD RELOCATION	6,200	
BIRMINGHAM MAP		16,100
DANNELLY FIELD		
VEHICLE MAINTENANCE COMPLEX	1,750	
DANNELLY FIELD		1,750
**AIR NATIONAL GUARD		18,543
ARMY RESERVE		
BIRMINGHAM		
BATTLE PROJECTION CENTER	4,719	
BIRMINGHAM		4,719
FAMILY HOUSING		
AIR FORCE		
MAXWELL AFB		
FAMILY HOUSING (55 UNITS)	(4,080)	
MAXWELL AFB		
FAMILY HOUSING		(4,080)
**ALABAMA		215,830
AUTHORIZED FOR APPROPRIATION IN PRIOR YEAR		(5,000)
FAMILY HOUSING		(4,080)
ALASKA		
ARMY		
FT J M WAINWRIGHT		
WASTE OIL BURNING POWER PLANT	740	
FT J M WAINWRIGHT		740
FORT RICHARDSON		
JOINT MOBILITY CENTER	10,000	
FORT RICHARDSON		10,000
**ARMY		10,740
AIR FORCE		
CAPE ROMANZOV AFS		
REPLACE TRAMWAY SYSTEM	3,350	
CAPE ROMANZOV AFS		3,350
EIELSON AFB		
CHILD DEVELOPMENT CENTER	5,400	
FIRE TRAINING FACILITY	2,400	
UPGRADE WASTEWATER TREATMENT SYSTEM	1,750	
UPGRADE WATER TREATMENT PLANT	3,750	
EIELSON AFB		13,300
ELMENDORF AFB		
ADD TO SANITARY SEWER SYSTEM	5,100	
CHILD DEVELOPMENT CENTER	5,070	
CORROSION CONTROL FACILITY	5,975	
DINING FACILITY	6,800	
HAZARDOUS WASTE STORAGE FACILITY	3,900	
JOINT MOBILITY COMPLEX	5,500	
MUNITIONS EQUIPMENT FACILITY	1,860	
MUNITIONS MAINTENANCE FACILITY	2,100	
RUNWAY REPAIR	2,500	
ELMENDORF AFB		38,805
**AIR FORCE		55,455

FY 1994 MILITARY CONSTRUCTION TOTAL OBLIGATIONAL AUTHORITY AS ENACTED

ACTIVE, GUARD AND RESERVE FORCES INSIDE THE UNITED STATES ($ THOUSANDS) — DATA AS OF FEB 1995

STATE/COMP./INSTALLATION ----------PROJECT NAME----------	PROJ COST	TOTAL
ALASKA		
DEFENSE LOGISTICS AGENCY		
DEF REUTILIZATION & MKTG OFC FAIRBANKS		
COVERED STORAGE	6,500	
DEF REUTILIZATION & MKTG OFC FAIRBANKS		6,500
DEFENSE MEDICAL SUPPORT ACTIVITY		
ELMENDORF AIR FORCE BASE		
#HOSPITAL REPLACEMENT PHASE II	37,000	
ELMENDORF AIR FORCE BASE		37,000
AUTHORIZED IN PRIOR YEAR		(37,000)
AIR NATIONAL GUARD		
EIELSON AFB		
FUEL SYSTEM MAINTENANCE HANGAR	8,900	
EIELSON AFB		8,900
KULIS ANGB		
REPLACE UNDERGROUND STORAGE TAMKS	1,100	
KULIS ANGB		1,100
**AIR NATIONAL GUARD		10,000
ARMY RESERVE		
FORT RICHARDSON		
ADD/ALT USARC/OMS/DS-GS/AMSA/STORAGE	10,324	
FORT RICHARDSON		10,324
**ALASKA		130,019
AUTHORIZED IN PRIOR YEAR		(37,000)
ARIZONA		
ARMY		
FORT HUACHUCA		
BATTALION HEADQUARTERS	4,800	
GENERAL PURPOSE ADMINISTRATIVE FACILITY	4,050	
FORT HUACHUCA		8,850
AIR FORCE		
DAVIS-MONTHAN AFB		
UNDERGROUND FUEL STORAGE TANKS	650	
VEHICLE MAINTENANCE FACILITY	5,500	
DAVIS-MONTHAN AFB		6,150
LUKE AFB		
DINING FACILITY	4,700	
FIRE TRAINING FACILITY	800	
FLOOD CONTROL	6,000	
UNDERGROUND FUEL STORAGE TANKS	1,250	
LUKE AFB		12,750
NAVAJO ARMY DEPOT		
ALTER MINUTEMAN II STORAGE FACILITIES	4,969	
NAVAJO ARMY DEPOT		4,969
**AIR FORCE		23,869
DEFENSE MEDICAL SUPPORT ACTIVITY		
YUMA MARINE CORPS AIR STATION		
MEDICAL/DENTAL CLINIC ADD/ALT	6,000	
YUMA MARINE CORPS AIR STATION		6,000
ARMY NATIONAL GUARD		
CAMP NAVAJO (BELLMONT)		
TNG SITE, WATER FILTRATION SYS	1,000	
CAMP NAVAJO (BELLMONT)		1,000

AUTHORIZED IN PRIOR YEAR

FY 1994 MILITARY CONSTRUCTION TOTAL OBLIGATIONAL AUTHORITY AS ENACTED

ACTIVE, GUARD AND RESERVE FORCES
INSIDE THE UNITED STATES
($ THOUSANDS)

DATA AS OF FEB 1995

STATE/COMP./INSTALLATION ----------PROJECT NAME----------	PROJ COST	TOTAL
ARIZONA		
ARMY NATIONAL GUARD		
MARANA		
OMSS	553	
WAATS, DINING FAC/DORM EXPAN	2,919	
MARANA		3,472
**ARMY NATIONAL GUARD		4,472
AIR NATIONAL GUARD		
TUCSON IAP		
ADD TO AND ALTER COMMUNICATIONS FACILITY	700	
REPLACE UNDERGROUND STORAGE TANKS	440	
TUCSON IAP		1,140
**ARIZONA		44,331
ARKANSAS		
AIR FORCE		
LITTLE ROCK AFB		
ADAL ENGINE INSP & REPAIR SHOP - DBOF T	1,200	
ADD & ALTER CHILD DEVELOPMENT CTR - DBOF	2,250	
ALTER JRTC OPERATIONS CENTER	1,050	
LITTLE ROCK AFB		4,500
ARMY NATIONAL GUARD		
CAMP ROBINSON		
ARMORY	3,205	
RANGE, MODIFIED RECORD FIRE	907	
TRNG SITE, SEWER IMPROV	4,424	
TRNG SITE, UTILITIES RENOV	1,275	
CAMP ROBINSON		9,811
AIR NATIONAL GUARD		
LITTLE ROCK AFB		
AIRCREW TRAINING FACILITY	3,750	
LITTLE ROCK AFB		3,750
FT SMITH MAP		
AIRCRAFT CORROSION CONTROL FACILITY	1,100	
FT SMITH MAP		1,100
**AIR NATIONAL GUARD		4,850
FAMILY HOUSING		
AIR FORCE		
LITTLE ROCK AFB		
HOUSING OFFICE AND MAINTENANCE FACILITY	(980)	
LITTLE ROCK AFB		
FAMILY HOUSING		(980)
**ARKANSAS		19,161
FAMILY HOUSING		(980)
CALIFORNIA		
ARMY		
FT IRWIN		
WHOLE BARRACKS RENEWAL	5,900	
FT IRWIN		5,900
NAVY		
BARSTOW MARINE CORPS LOGISTICS BASE		
INDUSTRIAL WASTE TREATMENT PLANT	8,690	
BARSTOW MARINE CORPS LOGISTICS BASE		8,690

FY 1994 MILITARY CONSTRUCTION TOTAL OBLIGATIONAL AUTHORITY AS ENACTED

ACTIVE, GUARD AND RESERVE FORCES INSIDE THE UNITED STATES ($ THOUSANDS) — DATA AS OF FEB 1995

STATE/COMP./INSTALLATION ----------PROJECT NAME----------	PROJ COST	TOTAL
CALIFORNIA		
NAVY		
CAMP PENDLETON MARINE CORPS AIR STATION		
DRAINAGE SYSTEM REPLACEMENT	3,000	
RADAR AIR TRAFFIC CONTROL FACILITY ADDN	3,850	
CAMP PENDLETON MARINE CORPS AIR STATION		6,850
CAMP PENDLETON MARINE CORPS BASE		
ARMORY	480	
AUTOMATED FIELD FIRING RANGE	1,340	
DRAINAGE SYSTEM	1,000	
SEWERAGE FACILITY	7,930	
WATER DISTRIBUTION LINE	750	
WATER DISTRIBUTION SYSTEM IMPROVEMENTS	1,380	
WATER WELLS RELOCATION	1,800	
CAMP PENDLETON MARINE CORPS BASE		14,680
FALLBROOK NAVAL WEAPONS STATION ANNEX		
HARM MISSILE MAGAZINES - DBOF	4,630	
FALLBROOK NAVAL WEAPONS STATION ANNEX		4,630
LEMOORE NAVAL AIR STATION		
FIRE FIGHTING TRAINING FACILITY	1,930	
LEMOORE NAVAL AIR STATION		1,930
SAN DIEGO FLEET & INDUSTRIAL SUPPLY CENTER		
FIRE PROTECTION SYSTEMS - DBOF	2,270	
SAN DIEGO FLEET & INDUSTRIAL SUPPLY CENTER		2,270
SAN DIEGO MARINE CORPS RECRUIT DEPOT		
WAREHOUSE	1,130	
SAN DIEGO MARINE CORPS RECRUIT DEPOT		1,130
SAN DIEGO NAVAL HOSPITAL		
CHILD DEVELOPMENT CENTER	2,700	
SAN DIEGO NAVAL HOSPITAL		2,700
TWENTYNINE PALMS MARCORP AIR-GRND COMB CTR		
ACADEMIC INSTRUCTION BUILDING ADDITION	600	
ANTI-ARMOR TRACKING RANGE MODERNIZATION	3,940	
ARMORY	3,360	
MULTIPURPOSE RANGE CPX	200	
TWENTYNINE PALMS MARCORP AIR-GRND COMB CTR		8,100
**NAVY		50,980
AIR FORCE		
BEALE AFB		
EDUCATION CENTER LIBRARY	3,100	
BEALE AFB		3,100
EDWARDS AFB		
CHILD DEVELOPMENT CENTER	5,900	
UNDERGROUND FUEL STORAGE TANKS	5,400	
EDWARDS AFB		11,300
MCCLELLAN AFB		
FIRE PROTECTION ACFT FACILITIES - DBOF	1,900	
INTERGRATED MEDIA CENTER	1,600	
REPAIR AIRCRAFT PARKING APRON	3,100	
UPGRADE AIRCRAFT PARKING APRON	3,600	
MCCLELLAN AFB		10,200
TRAVIS AFB		
ADD/ALTER DORMITORIES, PH IV	5,100	
AIRCRAFT GENERAL PURPOSE MAINTENANCE SHOP	11,200	

FY 1994 MILITARY CONSTRUCTION TOTAL OBLIGATIONAL AUTHORITY AS ENACTED

ACTIVE, GUARD AND RESERVE FORCES — DATA AS OF FEB 1995
INSIDE THE UNITED STATES
($ THOUSANDS)

STATE/COMP./INSTALLATION ----------PROJECT NAME----------	PROJ COST	TOTAL
CALIFORNIA		
AIR FORCE		
TRAVIS AFB		
UNDERGROUND FUEL STORAGE TANKS - DBOF T	2,840	
TRAVIS AFB		19,140
VANDENBERG AFB		
HARDWARE STORAGE FACILITY	3,500	
SLFI-TPQ-18 RADAR FACILITY	2,408	
SLFI-UPGRADE FIRE PROTECTION SYSTEM	1,600	
UNDERGROUND FUEL STORAGE TANKS	1,700	
UPGRADE ELECTRICAL SYSTEM	11,520	
VANDENBERG AFB		20,728
**AIR FORCE		64,468
DEFENSE LOGISTICS AGENCY		
DEFENSE REUTIL AND MARKTNG OFC MARCH AFB		
DRMO RELOCATION	630	
DEFENSE REUTIL AND MARKTNG OFC MARCH AFB		630
DEFENSE MEDICAL SUPPORT ACTIVITY		
EDWARDS AIR FORCE BASE		
LIFE SAFETY UPGRADE	1,700	
EDWARDS AIR FORCE BASE		1,700
ARMY NATIONAL GUARD		
BURBANK		
OMS ADDITION/ALTERATION	905	
BURBANK		905
FRESNO		
ARMORY/OMS	8,147	
FRESNO		8,147
FORT FUNSTON (SAN FRANCISCO)		
MVSB MOTOR VEHICLE STORAGE BLDG	739	
FORT FUNSTON (SAN FRANCISCO)		739
FORT IRWIN		
MAINTENANCE SHELTERS	1,265	
FORT IRWIN		1,265
VAN NUYS		
ARMORY, ADDITION/ALTERATION	6,518	
VAN NUYS		6,518
**ARMY NATIONAL GUARD		17,574
AIR NATIONAL GUARD		
FRESNO ANGB		
REPLACE UNDERGROUND FUEL STORAGE TANKS	490	
FRESNO ANGB		490
ONTARIO INTERNATIONAL AIRPORT (ANG)		
REPLACE UNDERGROUND FUEL STORAGE TANKS	310	
ONTARIO INTERNATIONAL AIRPORT (ANG)		310
**AIR NATIONAL GUARD		800
NAVY RESERVE		
NAVAL STATION SAN DIEGO		
CBU FACILITY	1,000	
NAVAL STATION SAN DIEGO		1,000
AIR FORCE RESERVE		
TRAVIS AFB		
AERIAL PORT TRAINING FACILITY	3,050	

FY 1994 MILITARY CONSTRUCTION TOTAL OBLIGATIONAL AUTHORITY AS ENACTED

ACTIVE, GUARD AND RESERVE FORCES
INSIDE THE UNITED STATES
($ THOUSANDS)

DATA AS OF FEB 1995

STATE/COMP./INSTALLATION ----------PROJECT NAME----------	PROJ COST	TOTAL
CALIFORNIA		
AIR FORCE RESERVE		
TRAVIS AFB		
ALTER RESERVE OPERATIONS AND TRAINING FAC	4,000	
TRAVIS AFB		7,050
FAMILY HOUSING		
ARMY		
FORT IRWIN		
NEW CONSTRUCTION (220)	(25,000)	
FORT IRWIN		
FAMILY HOUSING		(25,000)
NAVY		
PUBLIC WORKS CENTER SAN DIEGO		
NEW CONSTRUCTION (318 HOMES)	(36,571)	
PUBLIC WORKS CENTER SAN DIEGO		
FAMILY HOUSING		(36,571)
AIR FORCE		
VANDENBERG AFB		
FAMILY HOUSING (166 UNITS)	(21,907)	
VANDENBERG AFB		
FAMILY HOUSING		(21,907)
**CALIFORNIA		150,102
FAMILY HOUSING		(83,478)
COLORADO		
ARMY		
FORT CARSON		
RANGE CONTROL FACILITY	4,050	
FORT CARSON		4,050
FITZSIMONS ARMY MEDICAL CENTER		
DIAL CENTRAL OFFICE	4,400	
FITZSIMONS ARMY MEDICAL CENTER		4,400
**ARMY		8,450
AIR FORCE		
BUCKLEY ANG BASE		
COMMUNICATION DATA PROCESSING FACILITY	39,000	
BUCKLEY ANG BASE		39,000
CHEYENNE MT COMPLEX AFB		
UPGRADE ELECTRICAL SERVICE	4,450	
CHEYENNE MT COMPLEX AFB		4,450
PETERSON AFB		
ADD TO AND ALTER INTEGRATION SUPPORT FAC	16,400	
PRECISION MEASUREMENT EQUIPMENT LABORATORY	2,200	
TEST AND EVALUATION SUPPORT FACILITY	2,430	
PETERSON AFB		21,030
US AIR FORCE ACADEMY		
ADAL WASTEWATER TREATMENT PLANT	7,100	
ENHANCED FLIGHT SCREENER HANGARS	3,800	
UNDERGROUND FUEL STORAGE TANKS	780	
US AIR FORCE ACADEMY		11,680
**AIR FORCE		76,160
AIR NATIONAL GUARD		
BUCKLEY ANGB		
F-16 WEAPONS RELEASE SHOP	1,300	
BUCKLEY ANGB		1,300

FY 1994 MILITARY CONSTRUCTION TOTAL OBLIGATIONAL AUTHORITY AS ENACTED

ACTIVE, GUARD AND RESERVE FORCES
INSIDE THE UNITED STATES
($ THOUSANDS)

DATA AS OF FEB 1995

STATE/COMP./INSTALLATION ----------PROJECT NAME----------	PROJ COST	TOTAL
COLORADO		
AIR FORCE RESERVE		
PETERSON AFB		
ORGANIZATIONAL MAINTENANCE SUPPORT FAC	1,200	
PETERSON AFB		1,200
**COLORADO		87,110
CONNECTICUT		
NAVY		
NEW LONDON NAVAL SUBMARINE BASE		
BACHELOR ENLISTED QUARTERS MODERNIZATION	14,800	
ELECTRICAL DISTRIBUTION IMPROVEMENTS	8,190	
HAZARDOUS WASTE TRANSFER FACILITY	1,450	
INDUSTRIAL WASTE TREATMENT FACILITY	5,700	
STEAM TURBINE GENERATOR	6,600	
SUBMARINE DRYDOCK PIER	4,200	
NEW LONDON NAVAL SUBMARINE BASE		40,940
ARMY NATIONAL GUARD		
BRADLEY FIELD (WINDSOR)		
AVN. AASF ADDITION/ALTERATION	6,000	
BRADLEY FIELD (WINDSOR)		6,000
AIR NATIONAL GUARD		
BRADLEY FIELD		
ADD TO AND ALTER BASE CIVIL ENGINEER FAC	510	
BRADLEY FIELD		510
**CONNECTICUT		47,450
DELAWARE		
AIR FORCE		
DOVER AFB		
ADD TO AND ALTER DINNING FACILITY - DBOF	2,500	
DORMITORY - DBOF	4,180	
INSTALL EMISSION CONTROL DEVICES	860	
DOVER AFB		7,540
AIR NATIONAL GUARD		
GREATER WILMINGTON AIRPORT		
COMMUNICATIONS FACILITY	900	
REPLACE UNDERGROUND FUEL STORAGE TANKS	890	
GREATER WILMINGTON AIRPORT		1,790
**DELAWARE		9,330
DISTRICT OF COLUMBIA		
NAVY		
WASHINGTON COMMANDANT NAVAL DISTRICT		
CHILD DEVELOPMENT CENTER	1,480	
FIRE PROTECTION SYSTEM	1,630	
WASHINGTON COMMANDANT NAVAL DISTRICT		3,110
WASHINGTON NAVAL RESEARCH LABORATORY		
NAVAL CENTER FOR SPACE TECHNOLOGY	1,980	
SPECIAL PROJECTS BUILDING	400	
WASHINGTON NAVAL RESEARCH LABORATORY		2,380
**NAVY		5,490
AIR FORCE		
BOLLING AIR FORCE BASE		
ADD TO CHILD DEVELOPMENT CENTER	2,000	
BOLLING AIR FORCE BASE		2,000

FY 1994 MILITARY CONSTRUCTION TOTAL OBLIGATIONAL AUTHORITY AS ENACTED

ACTIVE, GUARD AND RESERVE FORCES
INSIDE THE UNITED STATES
($ THOUSANDS)

DATA AS OF FEB 1995

STATE/COMP./INSTALLATION ----------PROJECT NAME----------	PROJ COST	TOTAL
DISTRICT OF COLUMBIA		
FAMILY HOUSING		
NAVY		
PUBLIC WORKS CENTER WASHINGTON DC		
NEW CONSTRUCTION (188 HOMES)	(21,556)	
PUBLIC WORKS CENTER WASHINGTON DC		
FAMILY HOUSING		(21,556)
**DISTRICT OF COLUMBIA		7,490
FAMILY HOUSING		(21,556)
FLORIDA		
NAVY		
JACKSONVILLE NAVAL AIR STATION		
BACHELOR ENLISTED QUARTERS	13,800	
HELICOPTER WASH AND RINSE FACILITY	620	
JACKSONVILLE NAVAL AIR STATION		14,420
MAYPORT NAVAL STATION		
AIR EMISSIONS CONTROL	3,260	
MAYPORT NAVAL STATION		3,260
PENSACOLA NAVAL AIR STATION		
RADAR AIR TRAFFIC CONTROL CENTER	1,880	
WATER SURVIVAL TRAINING FACILITY	4,540	
PENSACOLA NAVAL AIR STATION		6,420
**NAVY		24,100
AIR FORCE		
CAPE CANAVERAL AFS		
SEWAGE TREATMENT PLANT	11,900	
SLFI-BACKUP POWER	800	
SLFI-BACKUP POWER	2,500	
SLFI-UPGRADE WATER SUPPLY MAINS	1,200	
UNDERGROUND FUEL STORAGE TANKS	400	
UPGRADE FIRE SYSTEM	2,100	
CAPE CANAVERAL AFS		18,900
EGLIN AFB		
AIRCRAFT ENGINE TEST FACILITY	1,600	
RENOVATE CLIMATIC TEST CHAMBER PHASE II	37,000	
REPLACE POL PIPELINE	3,300	
UPGRADE HYDRANT FUELING SYSTEM	4,550	
VEHICLE MAINTENANCE/WAREHOUSE FACILITIES	2,600	
EGLIN AFB		49,050
EGLIN AFB AUXILIARY FIELD 9		
ADD TO AND ALTER DORMITORIES	4,479	
UPGRADE SANITARY SEWAGE SYSTEMS	1,750	
UPGRADE STORM SEWAGE SYSTEM	1,544	
EGLIN AFB AUXILIARY FIELD 9		7,773
PATRICK AFB		
ALTER MAINTENANCE HANGAR	407	
UNDERGROUND FUEL STORAGE TANKS	1,600	
PATRICK AFB		2,007
TYNDALL AFB		
BASE SUPPLY & EQUIPMENT WAREHOUSE	3,200	
BASE SUPPLY LOGISTICS CENTER	2,400	
SECURITY POLICE OPERATIONS	2,400	
TYNDALL AFB		8,000
**AIR FORCE		85,730

FY 1994 MILITARY CONSTRUCTION TOTAL OBLIGATIONAL AUTHORITY AS ENACTED

ACTIVE, GUARD AND RESERVE FORCES INSIDE THE UNITED STATES ($ THOUSANDS)

DATA AS OF FEB 1995

STATE/COMP./INSTALLATION ----------PROJECT NAME----------	PROJ COST	TOTAL
FLORIDA		
SPECIAL OPERATIONS COMMAND		
EGLIN AUX FIELD 9		
ADD TO SUPPLY/WRSK	1,502	
ALTER AVIONICS SHOP-H	4,500	
MH60G HELO HANGER (H)	5,700	
MUNITIONS MAINT FAC-H	2,550	
SQN OPS MC130 (H)	2,750	
SQN OPS MH60G(1SOW)-H	2,250	
WEAPONS MX FAC ADD(H)	580	
EGLIN AUX FIELD 9		19,832
AIR NATIONAL GUARD		
JACKSONVILLE IAP		
REPLACE UNDERGROUND FUEL STORAGE TANKS	1,150	
JACKSONVILLE IAP		1,150
AIR FORCE RESERVE		
MACDILL AFB		
AEROMEDICAL EVACUATION FACILITY	3,500	
MACDILL AFB		3,500
FAMILY HOUSING		
NAVY		
PUBLIC WORKS CENTER PENSACOLA		
NEW CONSTRUCTION (SELF HELP/WAREHOUSE)	(300)	
PUBLIC WORKS CENTER PENSACOLA		
FAMILY HOUSING		(300)
AIR FORCE		
PATRICK AFB		
FAMILY HOUSING (155 UNITS)	(15,388)	
PATRICK AFB		
FAMILY HOUSING		(15,388)
TYNDALL AFB		
INFRASTRUCTURE	(5,732)	
TYNDALL AFB		
FAMILY HOUSING		(5,732)
**AIR FORCE		
FAMILY HOUSING		(21,120)
**FLORIDA		134,312
FAMILY HOUSING		(21,420)
GEORGIA		
ARMY		
FORT BENNING		
BARRACKS MODERNIZATION	18,500	
MULTIPURPOSE MACHINE GUN RANGE	1,650	
WHOLE BARRACKS RENEWAL	17,500	
FORT BENNING		37,650
FORT GILLEM		
PHYSICAL FITNESS CENTER	2,600	
FORT GILLEM		2,600
FT STEWART/HUNTER AAF		
CARGO HANDLING FACILITY	4,200	
EXPAND AMMUNITION STORAGE AREA	3,600	
HARDSTAND	9,400	
RAILROAD TRACK IMPROVEMENT	3,100	
FT STEWART/HUNTER AAF		20,300
**ARMY		60,550

FY 1994 MILITARY CONSTRUCTION TOTAL OBLIGATIONAL AUTHORITY AS ENACTED

ACTIVE, GUARD AND RESERVE FORCES INSIDE THE UNITED STATES ($ THOUSANDS)

DATA AS OF FEB 1995

STATE/COMP./INSTALLATION ----------PROJECT NAME----------	PROJ COST	TOTAL
GEORGIA		
NAVY		
ALBANY MARINE CORPS LOGISTICS BASE		
CHILD DEVELOPMENT CENTER	940	
ALBANY MARINE CORPS LOGISTICS BASE		940
KINGS BAY NAVAL SUBMARINE BASE		
DIKES	3,730	
UTILITIES AND SITE IMPROVEMENTS	7,190	
KINGS BAY NAVAL SUBMARINE BASE		10,920
KINGS BAY TRIDENT TRAINING FACILITY		
FIRE FIGHTING TRAINING FACILITY	3,870	
KINGS BAY TRIDENT TRAINING FACILITY		3,870
**NAVY		15,730
AIR FORCE		
MOODY AFB		
AIRCRAFT MAINTENANCE DOCK	4,700	
AIRCRAFT PARKING/ACCESS TAXIWAY	9,000	
MOODY AFB		13,700
ROBINS AFB		
ADAL LOGISTICAL SYSTEMS OPERATIONS CENTER	3,000	
ADD TO ALTER DORMITORIES - DBOF	4,300	
AIRCRAFT SUPPORT EQUIPMENT PAINT FACILITY	970	
J-STARS ADD TO AND ALTER MAINT COMPLEX	9,300	
J-STARS ADD TO AND ALTER OPERATIONS CMPLX	4,100	
J-STARS ADD TO AND ALTER UTILITIES	3,500	
J-STARS SQUADRON OPERATIONS/AMU	7,500	
UPGD INDSTRL WASTEWATER TRTMNT & DSPSL PLT	10,700	
ROBINS AFB		43,370
**AIR FORCE		57,070
DOD DEPENDENT SCHOOLS		
ROBINS AFB		
LINWOOD ELEM SCHOOL ADDN	1,580	
ROBINS ELEM SCHOOL ADDN	1,580	
ROBINS AFB		3,160
AIR NATIONAL GUARD		
DOBBINS AFB		
PETROLEUM OPERATIONS COMPLEX	600	
REPLACE UNDERGROUND FUEL STORAGE TANKS	1,150	
DOBBINS AFB		1,750
LEWIS B. WILSON AIRPORT (ANG)		
REPLACE UNDERGROUND FUEL STORAGE TANKS	340	
LEWIS B. WILSON AIRPORT (ANG)		340
MCCOLLUM ANG STATION		
REPLACE UNDERGROUND FUEL STORAGE TANKS	315	
MCCOLLUM ANG STATION		315
ROBINS AFB		
SUPPORT AND HYDRANT SYSTEM	5,750	
ROBINS AFB		5,750
SAVANNAH ANG COMMUNICATIONS STATION		
REPLACE UNDERGROUND FUEL STORAGE TANKS	330	
SAVANNAH ANG COMMUNICATIONS STATION		330
SAVANNAH COMBAT READINESS TRAINING SITE		
FIRE DETECTION AND SUPPRESSION SYSTEMS	1,650	

FY 1994 MILITARY CONSTRUCTION TOTAL OBLIGATIONAL AUTHORITY AS ENACTED

ACTIVE, GUARD AND RESERVE FORCES INSIDE THE UNITED STATES ($ THOUSANDS)

DATA AS OF FEB 1995

STATE/COMP./INSTALLATION ----------PROJECT NAME----------	PROJ COST	TOTAL
GEORGIA		
AIR NATIONAL GUARD		
SAVANNAH COMBAT READINESS TRAINING SITE		
REPLACE UNDERGROUND FUEL STORAGE TANKS	315	
SAVANNAH COMBAT READINESS TRAINING SITE		1,965
SAVANNAH MAP		
REFUELING VEHICLE PARKING AND OPS COMPLEX	990	
SAVANNAH MAP		990
**AIR NATIONAL GUARD		11,440
ARMY RESERVE		
FORT MCPHERSON		
USAR COMD HQ BLDG, PH 1	15,000	
FORT MCPHERSON		15,000
AIR FORCE RESERVE		
DOBBINS AFB		
ADD TO AND ALTER SECURITY POLICE OPS W/ANG	1,900	
FLIGHT SIMULATION CENTER	6,000	
DOBBINS AFB		7,900
FAMILY HOUSING		
NAVY		
NAVAL SUBMARINE SUPPORT BASE KINGS BAY		
NEW CONSTRUCTION (CMM CNTR/SELF HLP/HHSE)	(790)	
NAVAL SUBMARINE SUPPORT BASE KINGS BAY FAMILY HOUSING		(790)
AIR FORCE		
ROBINS AFB		
FAMILY HOUSING (118 UNITS)	(7,424)	
ROBINS AFB FAMILY HOUSING		(7,424)
**GEORGIA		170,850
FAMILY HOUSING		(8,214)
HAWAII		
ARMY		
SCHOFIELD BARRACKS		
MULTI-PURPOSE FAMILY SERVICE CENTER	16,000	
OPERATIONS FACILITY	2,600	
SCHOFIELD BARRACKS		18,600
NAVY		
BARBERS POINT NAVAL AIR STATION		
CHILD DEVELOPMENT CENTER	2,700	
BARBERS POINT NAVAL AIR STATION		2,700
HONOLULU COMP&TELCOMM AREA MASTER STA EPAC		
BACH ENLLISTED QUARTERS MODERNIZATION	4,390	
BACHELOR ENLISTED QUARTERS MODERNIZATION	4,730	
HONOLULU COMP&TELCOMM AREA MASTER STA EPAC		9,120
PEARL HARBOR NAVAL SUBMARINE BASE		
BACHELOR ENLISTED QUARTERS COMPLEX	25,500	
ENLISTED MESS HALL MODERNIZATION	2,640	
SUBMARINE BERTING WHARF	26,000	
PEARL HARBOR NAVAL SUBMARINE BASE		54,140
PEARL HARBOR NAVY PUBLIC WORKS CENTER		
INDUSTRIAL WASTE TREATMENT PLANT - OBOF	18,560	

FY 1994 MILITARY CONSTRUCTION TOTAL OBLIGATIONAL AUTHORITY AS ENACTED

ACTIVE, GUARD AND RESERVE FORCES — DATA AS OF FEB 1995
INSIDE THE UNITED STATES
($ THOUSANDS)

STATE/COMP./INSTALLATION ----------PROJECT NAME----------	PROJ COST	TOTAL
HAWAII		
NAVY		
PEARL HARBOR NAVY PUBLIC WORKS CENTER		
WASTEWATER COLLECTION SYS IMPRVMNT - DBOF	8,980	
PEARL HARBOR NAVY PUBLIC WORKS CENTER		27,540
PEARL HARBOR UNDERSEA SURV US PACIFIC FLT		
BERTHING PIER	16,780	
PEARL HARBOR UNDERSEA SURV US PACIFIC FLT		16,780
WAIPAHU NAV INACTIVE SHIP MAINTENANCE FAC		
INACTIVE SHIPS PIER	2,620	
WAIPAHU NAV INACTIVE SHIP MAINTENANCE FAC		2,620
**NAVY		112,900
AIR FORCE		
HICKAM AFB		
DORMITORY	9,500	
MILSTAR COMMUNICATIONS GROUND TERMINAL	2,200	
UNDERGROUND FUEL STORAGE TANKS	2,100	
HICKAM AFB		13,800
KAENA POINT		
POWER PLANT	7,350	
KAENA POINT		7,350
**AIR FORCE		21,150
DEFENSE LOGISTICS AGENCY		
DEFENSE FUEL SUPPORT POINT PEARL HARBOR		
POL LABORATORY FACILITY	2,250	
DEFENSE FUEL SUPPORT POINT PEARL HARBOR		2,250
ARMY NATIONAL GUARD		
KAUAI		
RANGE, KNOWN DISTANCE UPGRADE	334	
KAUAI		334
MOLOKAI		
ARMORY	1,050	
MOLOKAI		1,050
OAHU		
ARMORY ADDITION	4,300	
OAHU		4,300
**ARMY NATIONAL GUARD		5,684
AIR NATIONAL GUARD		
BARKING SANDS		
FORWARD AIR CONTROL POINT FACILITY	8,500	
BARKING SANDS		8,500
HICKAM AFB		
CONSOLIDATED SUPPORT FACILITY	9,700	
FUEL SYSTEM MAINT AND CORROSION CONTROL FA	5,300	
HICKAM AFB		15,000
**AIR NATIONAL GUARD		23,500
NAVY RESERVE		
NAVAL STATION PEARL HARBOR		
CBU ADDITION	500	
NAVAL STATION PEARL HARBOR		500
FAMILY HOUSING		
ARMY		
SCHOFIELD BARRACKS		
NEW CONST(124)(18.0M) + REPL(136)(21.0M)	(39,000)	

FY 1994 MILITARY CONSTRUCTION TOTAL OBLIGATIONAL AUTHORITY AS ENACTED

ACTIVE, GUARD AND RESERVE FORCES
INSIDE THE UNITED STATES
($ THOUSANDS)

DATA AS OF FEB 1995

STATE/COMP./INSTALLATION ----------PROJECT NAME----------	PROJ COST	TOTAL
HAWAII		
ARMY		
SCHOFIELD BARRACKS		
NEW CONSTRUCTION (88)	(13,000)	
SCHOFIELD BARRACKS		
FAMILY HOUSING		(52,000)
**HAWAII		184,584
FAMILY HOUSING		(52,000)
IDAHO		
ARMY NATIONAL GUARD		
GOWEN FIELD		
COMBAT VEHICLE TRANSITION CMPLX	5,044	
USPFO ADMIN OFC/WHSE ADD	1,391	
GOWEN FIELD		6,435
HOMEDALE		
ARMORY	1,157	
HOMEDALE		1,157
**ARMY NATIONAL GUARD		7,592
AIR NATIONAL GUARD		
BOISE AIRPORT		
FIRE STATION AND AGE FACILITY	1,750	
BOISE AIRPORT		1,750
GOWEN FIELD		
IDAHO TRAINING RANGE	6,700	
GOWEN FIELD		6,700
**AIR NATIONAL GUARD		8,450
**IDAHO		16,042
ILLINOIS		
AIR FORCE		
SCOTT AFB		
INTEROPERABILITY TEST AND TRAINING FAC	5,000	
MUNITIONS STORAGE FAC/LAND ACQUIST - DBOF	2,249	
SCOTT AFB		7,249
ARMY NATIONAL GUARD		
ROCK ISLAND		
ARMORY/OMS	3,310	
ROCK ISLAND		3,310
AIR NATIONAL GUARD		
CAPITAL MAP		
ALTER STORM DRAINAGE DISPOSAL	500	
UPGRADE RUNWAY	2,300	
CAPITAL MAP		2,800
GREATER PEORIA AIRPORT		
ADD TO AND ALTER F-16 ACRFT AVIONICS SHOP	840	
GREATER PEORIA AIRPORT		840
**AIR NATIONAL GUARD		3,640
ARMY RESERVE		
ARGONNE		
USARC/OMS	10,381	
ARGONNE		10,381

FY 1994 MILITARY CONSTRUCTION TOTAL OBLIGATIONAL AUTHORITY AS ENACTED

ACTIVE, GUARD AND RESERVE FORCES
INSIDE THE UNITED STATES
($ THOUSANDS)

DATA AS OF FEB 1995

STATE/COMP./INSTALLATION ----------PROJECT NAME----------	PROJ COST	TOTAL
ILLINOIS		
FAMILY HOUSING		
AIR FORCE		
SCOTT AFB		
CARDINAL CREEK PHASE II	(10,000)	
SCOTT AFB		
FAMILY HOUSING		(10,000)
**ILLINOIS		24,580
FAMILY HOUSING		(10,000)
INDIANA		
NAVY		
CRANE NAVAL SURFACE WARFARE CENTER DIV		
ORDNANCE ENVIRONMENTAL TEST FACILITY	9,600	
CRANE NAVAL SURFACE WARFARE CENTER DIV		9,600
ARMY NATIONAL GUARD		
CAMP ATTERBURY		
RANGE, INF SQUAD BATTLE CRSE	1,156	
RANGE, MOD RECORD FIRE UPGRADE	654	
TNG SITE, HQ/BKS/ADM/SPLY PH6B	7,545	
TNG SITE, MILITARY ED FAC	5,400	
CAMP ATTERBURY		14,755
EVANSVILLE		
ARMORY/OMS	6,050	
EVANSVILLE		6,050
LAFAYETTE		
ARMORY/OMS	3,116	
LAFAYETTE		3,116
**ARMY NATIONAL GUARD		23,921
AIR NATIONAL GUARD		
HULMAN FIELD		
DINING HALL AND MEDICAL TRAINING FACILITY	3,800	
REPLACE UNDERGROUND FUEL STORAGE TANKS	950	
HULMAN FIELD		4,750
FT WAYNE MAP		
REPLACE UNDERGROUND FUEL STORAGE TANKS	1,350	
FT WAYNE MAP		1,350
**AIR NATIONAL GUARD		6,100
**INDIANA		39,621
IOWA		
ARMY NATIONAL GUARD		
CAMP DODGE		
ARMORY	4,550	
CONSOLIDATED PAINT FACILITY	1,500	
TNG SITE, BN COMPLEX, PHASE II	3,800	
CAMP DODGE		9,850
AIR NATIONAL GUARD		
DES MOINES MAP		
ADD TO AND ALTER DINING & MEDICAL TRNG FAC	1,800	
JET FUEL STORAGE COMPLEX	4,000	
REPLACE UNDERGROUND FUEL STORAGE TANKS	880	
DES MOINES MAP		6,680
SIOUX CITY MAP		
BASE CIVIL ENGINEER MAINTENANCE COMPLEX	2,650	

FY 1994 MILITARY CONSTRUCTION TOTAL OBLIGATIONAL AUTHORITY AS ENACTED

ACTIVE, GUARD AND RESERVE FORCES
INSIDE THE UNITED STATES
($ THOUSANDS)

DATA AS OF FEB 1995

STATE/COMP./INSTALLATION· PROJECT NAME	PROJ COST	TOTAL
IOWA		
AIR NATIONAL GUARD		
SIOUX CITY MAP		
MUNITIONS MAINTENANCE & STORAGE COMPLEX	2,850	
SIOUX CITY MAP		5,500
**AIR NATIONAL GUARD		12,180
**IOWA		22,030
KANSAS		
ARMY		
FORT RILEY		
BARRACKS & ADMIN RENOVATION	9,900	
BATTLE SIMULATION FACILITY	4,742	
FORT RILEY		14,642
AIR FORCE		
MCCONNELL AFB		
CONTROL TOWER CAB	900	
LAND RESTRICTIVE EASEMENT ACQUISITION	1,000	
MCCONNELL AFB		1,900
ARMY NATIONAL GUARD		
NICKELL BARRACKS		
TNG SITE, COMPLEX PHASE I	6,168	
NICKELL BARRACKS		6,168
FORT RILEY		
XTNG SITE, WASH FACILITY	3,398	
FORT RILEY		3,398
**ARMY NATIONAL GUARD		9,566
AIR NATIONAL GUARD		
FORBES FIELD		
REPLACE UNDERGROUND FUEL STORAGE TANKS	1,400	
FORBES FIELD		1,400
MCCONNELL AFB		
ALTER MEDICAL TRAINING AND TELECOM	890	
MCCONNELL AFB		890
**AIR NATIONAL GUARD		2,290
**KANSAS		28,398
KENTUCKY		
ARMY		
FORT CAMPBELL		
AIRFIELD IMPROVEMENTS	3,950	
DINING FACILITIES MODERNIZATION	3,500	
MOBILIZATION WAREHOUSE	850	
WHOLE BARRACKS RENEWAL	32,000	
FORT CAMPBELL		40,300
FORT KNOX		
MAINTENANCE FACILITY	12,200	
MULTIPURPOSE TRAINING RANGE	4,150	
WHOLE BARRACKS RENEWAL	25,000	
FORT KNOX		41,350
**ARMY		81,650
SPECIAL OPERATIONS COMMAND		
FORT CAMPBELL		
AIRCRAFT PARKING APRON	2,650	

FY 1994 MILITARY CONSTRUCTION TOTAL OBLIGATIONAL AUTHORITY AS ENACTED

ACTIVE, GUARD AND RESERVE FORCES INSIDE THE UNITED STATES ($ THOUSANDS) — DATA AS OF FEB 1995

STATE/COMP./INSTALLATION ----------PROJECT NAME----------	PROJ COST	TOTAL
KENTUCKY		
SPECIAL OPERATIONS COMMAND		
FORT CAMPBELL		
ARMY SOA BN, HQS	4,300	
FORT CAMPBELL		6,950
DOD DEPENDENT SCHOOLS		
FORT CAMPBELL		
FT CAMPBELL ELEM SCHOOL	8,982	
FT CAMPBELL LINCOLN ELEM SCHOOL ADDN	1,900	
FT CAMPBELL MAHAFFEY MIDDLE SCHOOL ADDN	2,300	
FORT CAMPBELL		13,182
FORT KNOX		
FT KNOX KINSOLVER VAN/VOORHIS ELEM SCHOOL	1,600	
FT KNOX SIX GYMNASIUM ADDN	6,107	
FORT KNOX		7,707
**DOD DEPENDENT SCHOOLS		20,889
ARMY NATIONAL GUARD		
FORT KNOX		
MATES PHASE I	10,000	
FORT KNOX		10,000
AIR NATIONAL GUARD		
STANDIFORD FIELD		
RELOCATION FACILITIES PHASE IV	5,000	
STANDIFORD FIELD		5,000
**KENTUCKY		124,489
LOUISIANA		
AIR FORCE		
BARKSDALE AFB		
ADD TO AND ALTER APRON/HYDRANT FUELING SYS	10,000	
APRON LIGHTING	1,300	
UPGRADE BULK STORAGE BASINS	1,600	
WEAPONS STORAGE AREA SECURITY	960	
BARKSDALE AFB		13,860
DOD DEPENDENT SCHOOLS		
FORT POLK		
FORT POLK ELEM SCHOOL	4,950	
FORT POLK		4,950
AIR NATIONAL GUARD		
HAMMOND		
REPLACE UNDERGROUND STORAGE TANKS	350	
HAMMOND		350
NEW ORLEANS NAS		
REPLACE UNDERGROUND FUEL STORAGE TANKS	350	
NEW ORLEANS NAS		350
**AIR NATIONAL GUARD		700
ARMY RESERVE		
NEW ORLEANS		
LAND ACQUISITION	645	
NEW ORLEANS		645
NAVY RESERVE		
NAVAL AIR STATION NEW ORLEANS		
ORDNANCE COMPLEX	1,900	
NAVAL AIR STATION NEW ORLEANS		1,900

FY 1994 MILITARY CONSTRUCTION TOTAL OBLIGATIONAL AUTHORITY AS ENACTED

ACTIVE, GUARD AND RESERVE FORCES INSIDE THE UNITED STATES ($ THOUSANDS)

DATA AS OF FEB 1995

STATE/COMP./INSTALLATION PROJECT NAME	PROJ COST	TOTAL
LOUISIANA		
NAVY RESERVE		
NAVAL SUPPORT ACTIVITY NEW ORLEANS		
HDQT 4TH MARDIV MCRC IMPROVEMENTS LA	460	
RENOVATE MARRESFDR HQ NSA NEW ORLEANS	1,560	
NAVAL SUPPORT ACTIVITY NEW ORLEANS		2,020
**NAVY RESERVE		3,920
AIR FORCE RESERVE		
BARKSDALE AFB		
WELDING AND MACHINE SHOP	600	
BARKSDALE AFB		600
FAMILY HOUSING		
AIR FORCE		
BARKSDALE AFB		
FAMILY HOUSING (117 UNITS)	(8,578)	
BARKSDALE AFB		
FAMILY HOUSING		(8,578)
**LOUISIANA		24,675
FAMILY HOUSING		(8,578)
MAINE		
NAVY		
KITTERY PORTSMOUTH NAVAL SHIPYARD		
HAZARDOUS WASTE STORAGE FACILITY - DBOF	4,780	
KITTERY PORTSMOUTH NAVAL SHIPYARD		4,780
ARMY NATIONAL GUARD		
NORWAY		
ARMORY EXPAN/REHAB	1,380	
NORWAY		1,380
FAMILY HOUSING		
NAVY		
NAS BRUNSWICK		
NEW CONSTRUCTION (MOBILE HOME SPACES)	(490)	
NAS BRUNSWICK		
FAMILY HOUSING		(490)
**MAINE		6,160
FAMILY HOUSING		(490)
MARYLAND		
ARMY		
ABERDEEN PROVING GROUND		
APPLIED INSTRUCTION FACILITY	14,000	
CHILD DEVELOPMENT CENTER	1,450	
TARGET ASSEMBLY AND STORAGE FACILITY	1,800	
UPGRADE RANGE COMPLEX	4,450	
ABERDEEN PROVING GROUND		21,700
NAVY		
ANNAPOLIS NAVAL ACADEMY		
PHYISCAL THERAPY/TRAINING/MEETING CENTER	6,500	
ANNAPOLIS NAVAL ACADEMY		6,500
BETHESDA NATIONAL NAVAL MEDICAL CENTER		
CHILD DEVELOPMENT CENTER	3,090	
BETHESDA NATIONAL NAVAL MEDICAL CENTER		3,090

FY 1994 MILITARY CONSTRUCTION TOTAL OBLIGATIONAL AUTHORITY AS ENACTED

ACTIVE, GUARD AND RESERVE FORCES INSIDE THE UNITED STATES ($ THOUSANDS)

DATA AS OF FEB 1995

STATE/COMP./INSTALLATION ----------PROJECT NAME----------	PROJ COST	TOTAL
MARYLAND		
NAVY		
INDIAN HEAD NAVAL SURFACE WARFARE CTR DIV		
HAZARDOUS WASTE TREATMENT FACILITY	3,400	
INDIAN HEAD NAVAL SURFACE WARFARE CTR DIV		3,400
PATUXENT RIVER NAVAL AIR STATION		
ADVANCE SYSTEM INTEGRATION FAC - PHASE II	10,000	
HAZARDOUS AND FLAMMABLE MATERIAL STOREHSE	3,400	
JET ENGINE TEST CELL	4,900	
SEWAGE TREATMENT PLANT UPGRADE	1,000	
PATUXENT RIVER NAVAL AIR STATION		19,300
**NAVY		32,290
AIR FORCE		
ANDREWS AFB		
AIR FREIGHT TERMINAL - DBOF T	4,400	
FIRE TRAINING FACILITY - DBOF	1,000	
UPGRADE COMPOSITE ADMIN FACILITY - DBOF	9,940	
UPGRADE SANITARY SEWER SYSTEMS	2,477	
ANDREWS AFB		17,817
FORT GEORGE MEADE		
ADD TO AIR FORCE SENIOR SCOUT OPS FAC	1,450	
FORT GEORGE MEADE		1,450
**AIR FORCE		19,267
NATIONAL SECURITY AGENCY		
FORT MEADE		
OPS 1 ROADWAY STRUCTURAL ENHANCEMENT	5,910	
SUPERCOMPUTER FACILITY	35,000	
FORT MEADE		40,910
DEFENSE MEDICAL SUPPORT ACTIVITY		
FORT DETRICK		
BIOLOGICAL INCINERATOR	4,300	
FORT DETRICK		4,300
FOREST GLEN (WRAIR)		
#ARMY INSTITUTE OF RESEARCH PHASE II	15,000	
FOREST GLEN (WRAIR)		15,000
AUTHORIZED IN PRIOR YEAR		(15,000)
**DEFENSE MEDICAL SUPPORT ACTIVITY		19,300
AUTHORIZED IN PRIOR YEAR		(15,000)
ARMY NATIONAL GUARD		
HAGERSTOWN		
ARMORY ADDITION/ALTERATION	1,776	
HAGERSTOWN		1,776
TOWSON		
ARMORY ALT/ADD	2,823	
TOWSON		2,823
**ARMY NATIONAL GUARD		4,599
AIR NATIONAL GUARD		
ANDREWS AFB		
ADD TO AND ALTER AVIONICS AND ECM POD FAC	1,100	
REPLACE UNDERGROUND FUEL STORAGE TANKS	890	
ANDREWS AFB		1,990
GLENN L MARTIN AIRPORT		
REPLACE UNDERGROUND FUEL STORAGE TANKS	1,000	
GLENN L MARTIN AIRPORT		1,000
**AIR NATIONAL GUARD		2,990

AUTHORIZED IN PRIOR YEAR

FY 1994 MILITARY CONSTRUCTION TOTAL OBLIGATIONAL AUTHORITY AS ENACTED

ACTIVE, GUARD AND RESERVE FORCES INSIDE THE UNITED STATES ($ THOUSANDS)

DATA AS OF FEB 1995

STATE/COMP./INSTALLATION ----------PROJECT NAME----------	PROJ COST	TOTAL
MARYLAND		
NAVY RESERVE		
NAF WASHINGTON		
EQUIPMENT OPS FACILITY	2,500	
NAF WASHINGTON		2,500
AIR FORCE RESERVE		
ANDREWS AFB		
REPLACE AIRCRAFT PARKING APRON	13,373	
ANDREWS AFB		13,373
FAMILY HOUSING		
ARMY		
FORT MEADE		
REPLACEMENT CONSTRUCTION (275)	(26,000)	
FORT MEADE		
FAMILY HOUSING		(26,000)

**MARYLAND		156,929
AUTHORIZED IN PRIOR YEAR		(15,000)
FAMILY HOUSING		(26,000)
MASSACHUSETTS		
ARMY NATIONAL GUARD		
AYER		
CSMS REHABILITATION	3,002	
AYER		3,002
AIR NATIONAL GUARD		
BARNES MAP		
ALTER OPS/TRAINING FACILITY	600	
BARNES MAP		600
OTIS ANGB		
COMMUNICTIONS/ELECTRONICS FACILITY	3,000	
OTIS ANGB		3,000
WORCESTER ANGS		
BASE SUPPLY WAREHOUSE	390	
WORCESTER ANGS		390

**AIR NATIONAL GUARD		3,990
AIR FORCE RESERVE		
WESTOVER AFB		
MEDICAL TRAINING FACILITY	2,600	
WESTOVER AFB		2,600
FAMILY HOUSING		
AIR FORCE		
HANSCOM AFB		
FAMILY HOUSING (46 UNITS)	(5,135)	
HANSCOM AFB		
FAMILY HOUSING		(5,135)

**MASSACHUSETTS		9,592
FAMILY HOUSING		(5,135)
MICHIGAN		
AIR NATIONAL GUARD		
ALPENA COUNTY REGIONAL AIRPORT		
UPGRADE WATER DISTRIBUTION SYSTEM	1,400	
ALPENA COUNTY REGIONAL AIRPORT		1,400

FY 1994 MILITARY CONSTRUCTION TOTAL OBLIGATIONAL AUTHORITY AS ENACTED

ACTIVE, GUARD AND RESERVE FORCES DATA AS OF FEB 1995
INSIDE THE UNITED STATES
($ THOUSANDS)

STATE/COMP./INSTALLATION ----------PROJECT NAME----------	PROJ COST	TOTAL
MICHIGAN		
AIR NATIONAL GUARD		
SELFRIDGE ANGB		
REPLACE UNDERGROUND FUEL STORAGE TANKS	710	
SELFRIDGE ANGB		710
WK KELLOGG REGIONAL AIRPORT		
ADAL FUEL CELL AND CORROSION CONTROL FAC	1,100	
WK KELLOGG REGIONAL AIRPORT		1,100
**AIR NATIONAL GUARD		3,210
NAVY RESERVE		
NRRC DETROIT		
MCRC IMPROVEMENTS NAVMARCORESCEN DETROIT	698	
RESCEN ADDITION	3,100	
NRRC DETROIT		3,798
**MICHIGAN		7,008
MINNESOTA		
ARMY NATIONAL GUARD		
CAMP RIPLEY		
ORGANIZATIONAL MAINT SHOPS	2,625	
RANGE, MPRC (HEAVY)	3,185	
CAMP RIPLEY		5,810
INVER GROVE HEIGHTS		
ARMORY/OMS	4,571	
INVER GROVE HEIGHTS		4,571
VARIOUS LOCATIONS		
ARMORY ADDITIONS/ALTERATIONS	3,225	
VARIOUS LOCATIONS		3,225
**ARMY NATIONAL GUARD		13,606
AIR NATIONAL GUARD		
DULUTH ANGB		
REPLACE UNDERGROUND FUEL STORAGE TANKS	1,000	
DULUTH ANGB		1,000
**MINNESOTA		14,606
MISSISSIPPI		
NAVY		
GULFPORT NAVAL CONSTRUCTION BATTALION CTR		
CHILD DEVELOPMENT CENTER	2,400	
FAMILY SERVICE CENTER	2,000	
GULFPORT NAVAL CONSTRUCTION BATTALION CTR		4,400
AIR FORCE		
COLUMBUS AFB		
UPGRADE AIRFIELD LIGHTING	2,900	
COLUMBUS AFB		2,900
KEESLER AFB		
FIRE TRAINING FACILITY	690	
UNDERGROUND FUEL STORAGE TANKS	600	
UPGRADE SANITARY SEWER SYSTEM	2,920	
UPGRADE STUDENT DORMITORY	4,021	
KEESLER AFB		8,231
**AIR FORCE		11,131

FY 1994 MILITARY CONSTRUCTION TOTAL OBLIGATIONAL AUTHORITY AS ENACTED

ACTIVE, GUARD AND RESERVE FORCES INSIDE THE UNITED STATES ($ THOUSANDS)

DATA AS OF FEB 1995

STATE/COMP./INSTALLATION ----------PROJECT NAME----------	PROJ COST	TOTAL
MISSISSIPPI		
ARMY NATIONAL GUARD		
CAMP MC CAIN		
TNG SITE IMPROVEMENTS	5,500	
CAMP MC CAIN		5,500
CAMP SHELBY		
REGION MIL ED FAC PHASE I	6,000	
TNG SITE, TANK WASH	5,000	
CAMP SHELBY		11,000
GREENVILLE		
ARMORY,	2,230	
GREENVILLE		2,230
JACKSON		
ARMORY, HQ STARC	2,550	
JACKSON		2,550
TUPELO		
AVN, AASF ADDITION/ALTERATION	3,210	
TUPELO		3,210
VARIOUS		
ARMORY (6)	5,204	
VARIOUS		5,204
**ARMY NATIONAL GUARD		29,694
AIR NATIONAL GUARD		
ALLEN C THOMPSON FIELD		
REPLACE UNDERGROUND FUEL STORAGE TANKS	730	
ALLEN C THOMPSON FIELD		730
GULFPORT		
REPLACE UNDERGROUND FUEL STORAGE TANKS	335	
UPGRADE ELECTRICAL DISTRIBUTION SYSTEM	850	
GULFPORT		1,185
**AIR NATIONAL GUARD		1,915
**MISSISSIPPI		47,140
MISSOURI		
ARMY		
FORT LEONARD WOOD		
OPERATIONS FACILITY	1,000	
FORT LEONARD WOOD		1,000
AIR FORCE		
WHITEMAN AFB		
B-2 ADD TO AND ALTER MUNITIONS STORAGE FAC	3,338	
B-2 AIRCRAFT APRON/TAXIWAY UPGRADE	3,400	
B-2 AIRCRAFT MAINTENANCE DOCK	14,500	
B-2 DEFENSE ACCESS ROADS	7,150	
B-2 HYDRANT FUELING SYSTEM LOOP, PH II	2,700	
B-2 UPGRADE BASE ROADS	5,900	
B-2 UTILITY UPGRADE	4,850	
B-2 VEHICLE MAINTENANCE FACILITY	1,700	
WHITEMAN AFB		43,538
ARMY NATIONAL GUARD		
FORT CROWDER		
TRNG SITE, TROOP MED TRNG FACIL	386	
FORT CROWDER		386

FY 1994 MILITARY CONSTRUCTION TOTAL OBLIGATIONAL AUTHORITY AS ENACTED

ACTIVE, GUARD AND RESERVE FORCES INSIDE THE UNITED STATES ($ THOUSANDS)

DATA AS OF FEB 1995

STATE/COMP./INSTALLATION ----------PROJECT NAME----------	PROJ COST	TOTAL
MISSOURI		
ARMY NATIONAL GUARD		
FORT LEONARDWOOD		
ARMORY/OMS	2,349	
FORT LEONARDWOOD		2,349
POPLAR BLUFF		
ARMORY/OMS	2,842	
POPLAR BLUFF		2,842
**ARMY NATIONAL GUARD		5,577
AIR NATIONAL GUARD		
JEFFERSON BARRACKS ANG SITE		
ALTER COMMUNICATIONS ELECTRONICS TRNG FAC	2,800	
UPGRADE DINING HALL	720	
JEFFERSON BARRACKS ANG SITE		3,520
ROSECRANS MEMORIAL AIRPORT		
JET FUEL STORAGE	4,000	
REPLACE UNDERGROUND FUEL STORAGE TANKS	1,250	
ROSECRANS MEMORIAL AIRPORT		5,250
**AIR NATIONAL GUARD		8,770
**MISSOURI		58,885
MONTANA		
AIR FORCE		
MALMSTROM AFB		
BASE ENGINEERING COMPLEX - DBOF	6,200	
UNDGD FUEL STORAGE TANKS MINUTEMAN II FACS	1,500	
MALMSTROM AFB		7,700
ARMY NATIONAL GUARD		
FT WM HENRY HARRISON		
TRNG SITE, MED UNIT TNG FACIL	501	
FT WM HENRY HARRISON		501
AIR NATIONAL GUARD		
GREAT FALLS IAP		
MEDICAL TRAINING AND DINING HALL	2,900	
REPLACE UNDERGROUND FUEL STORAGE TANKS	400	
GREAT FALLS IAP		3,300
FAMILY HOUSING		
AIR FORCE		
MALMSTROM AFB		
HOUSING OFFICE	(581)	
MALMSTROM AFB		
FAMILY HOUSING		(581)
**MONTANA		11,501
FAMILY HOUSING		(581)
NEBRASKA		
AIR FORCE		
OFFUTT AFB		
ADD TO EMERGENCY BACK-UP POWER	2,300	
REPAIR AIRFIELD PAVEMENTS AND LIGHTING	8,700	
OFFUTT AFB		11,000
DEFENSE MEDICAL SUPPORT ACTIVITY		
OFFUTT AIR FORCE BASE		
LIFE SAFETY UPGRADE	1,100	
OFFUTT AIR FORCE BASE		1,100

FY 1994 MILITARY CONSTRUCTION TOTAL OBLIGATIONAL AUTHORITY AS ENACTED

ACTIVE, GUARD AND RESERVE FORCES INSIDE THE UNITED STATES ($ THOUSANDS) — DATA AS OF FEB 1995

STATE/COMP./INSTALLATION ----------PROJECT NAME----------	PROJ COST	TOTAL
NEBRASKA		
AIR NATIONAL GUARD		
LINCOLN MAP		
ALTER MAINTENANCE HANGAR	7,300	
FIRE STATION	1,850	
REPLACE HEATING PLANTS	1,500	
LINCOLN MAP		10,650
**NEBRASKA		22,750
NEVADA		
ARMY		
HAWTHORNE AAP		
CONTAINER HOLDING PADS	7,000	
REHABILITATE RAIL LINE	4,700	
HAWTHORNE AAP		11,700
NAVY		
FALLON NAVAL AIR STATION		
LAND ACQUISITION	1,600	
FALLON NAVAL AIR STATION		1,600
AIR FORCE		
NELLIS AFB		
ADD TO ALTER PHYSICAL FITNESS CTR	4,350	
BOMBER LIVE ORDANCE LOADING APRON	4,100	
UPGRADE POL TANKS	1,650	
NELLIS AFB		10,100
ARMY NATIONAL GUARD		
LAS VEGAS		
ARMORY	1,430	
LAS VEGAS		1,430
AIR NATIONAL GUARD		
RENO IAP		
FLIGHT SIMULATOR BUILDING	400	
REPLACE UNDERGROUND FUEL STORAGE TANKS	460	
RENO IAP		860
FAMILY HOUSING		
ARMY		
HAWTHORNE APP		
DEMOLISH SUBSTANDARD, ABANDONED HSE (100)	(500)	
HAWTHORNE APP		
FAMILY HOUSING		(500)
**NEVADA		25,690
FAMILY HOUSING		(500)
NEW JERSEY		
ARMY		
FORT MONMOUTH		
SATELLITE CONTROL SYSTEM	7,500	
FORT MONMOUTH		7,500
PICATINNY ARSENAL		
EXPLOSIVE DEVELOPMENT FACILITY	6,100	
WARHEAD DEVELOPMENT FACILITY	4,400	
PICATINNY ARSENAL		10,500
**ARMY		18,000
NAVY		
EARLE NAVAL WEAPONS STATION		
EXPLOSIVES HOLDING YARD - DBOF	1,290	

FY 1994 MILITARY CONSTRUCTION TOTAL OBLIGATIONAL AUTHORITY AS ENACTED

ACTIVE, GUARD AND RESERVE FORCES
INSIDE THE UNITED STATES
($ THOUSANDS)

DATA AS OF FEB 1995

STATE/COMP./INSTALLATION ----------PROJECT NAME----------	PROJ COST	TOTAL
NEW JERSEY		
NAVY		
EARLE NAVAL WEAPONS STATION		
HAZARDOUS WASTE STORAGE FACILITY - DBOF	870	
MATERIALS HNDLG EQUIP SERV CTR ALT - DBOF	420	
EARLE NAVAL WEAPONS STATION		2,580
AIR NATIONAL GUARD		
ATLANTIC CITY		
FIRE STATION	1,350	
REPLACE UNDERGROUND FUEL STORAGE TANKS	1,900	
ATLANTIC CITY		3,250
ARMY RESERVE		
FORT DIX		
UPGRADE RANGE # 65	2,700	
FORT DIX		2,700
NAVY RESERVE		
NRC KEARNY		
MCRC IMPROVEMENTS WEST TRENTON	264	
RESCEN A/C	800	
NRC KEARNY		1,064
**NEW JERSEY		27,594
NEW MEXICO		
ARMY		
WHITE SANDS MISSILE RANGE		
CHILD DEVELOPMENT CENTER	3,300	
TARGET TRACK	2,900	
WHITE SANDS MISSILE RANGE		6,200
AIR FORCE		
CANNON AFB		
ADD TO ALTER DORMITORY	3,100	
BASE ENGINEERING COMPLEX	6,150	
FIRE TRAINING FACILITY	1,000	
SOUND SUPPRESSOR SUPPORT PAD	665	
UNDERGROUND FUEL STORAGE TANKS	1,100	
CANNON AFB		12,015
HOLLOMAN AFB		
ADD TO AND ALTER DORMITORIES	6,400	
FIGHTER MAINTENANCE FACILITY	1,900	
SEWER EFFLUENT SYSTEM	1,800	
UNDERGROUND FUEL STORAGE TANKS	1,000	
HOLLOMAN AFB		11,100
KIRTLAND AFB		
AEROSPACE ENGINEERING FACILITY	3,167	
ALTER DORMITORY	5,100	
COMPOSITE MATERIALS LABORATORY	5,750	
SPACE STRUCTURES LABORATORY	6,200	
UPGRADE ELECTRICAL DISTRIBUTION SYSTEM	6,844	
UPGRADE UTILITY SYSTEM	8,000	
KIRTLAND AFB		35,061
**AIR FORCE		58,176
DEFENSE MEDICAL SUPPORT ACTIVITY		
CANNON AIR FORCE BASE		
CMF ADD/ALT LIFE SAFETY/SEISMIC UPGRADE	13,600	
CANNON AIR FORCE BASE		13,600
ARMY NATIONAL GUARD		
WHITE SANDS MISSILE BASE		
MATES	3,570	

FY 1994 MILITARY CONSTRUCTION TOTAL OBLIGATIONAL AUTHORITY AS ENACTED

ACTIVE, GUARD AND RESERVE FORCES INSIDE THE UNITED STATES ($ THOUSANDS) — DATA AS OF FEB 1995

STATE/COMP./INSTALLATION PROJECT NAME	PROJ COST	TOTAL
NEW MEXICO		
ARMY NATIONAL GUARD		
WHITE SANDS MISSILE BASE		
OMS	2,940	
TNG SITE, TACTICAL SITE	1,995	
WHITE SANDS MISSILE BASE		8,505
AIR NATIONAL GUARD		
KIRTLAND AFB		
ALTER MAINTENANCE SHOPS	345	
ALTER OPERATIONAL TRAINING FACILITY	390	
POWER CHECK PAD WITH SOUND SUPPRESSOR	800	
KIRTLAND AFB		1,535
AIR FORCE RESERVE		
KIRTLAND AFB		
CIVIL ENGINEERING TRAINING FACILITY	900	
KIRTLAND AFB		900
**NEW MEXICO		88,916
NEW YORK		
ARMY		
U S MILITARY ACADEMY		
WHOLE BARRACKS RENEWAL	13,800	
U S MILITARY ACADEMY		13,800
AIR NATIONAL GUARD		
FRANCIS S. GABRESKI AIRPORT		
WASTE WATER TREATMENT PLANT	2,700	
FRANCIS S. GABRESKI AIRPORT		2,700
HANCOCK FIELD		
FIRE STATION	1,350	
HANCOCK FIELD		1,350
NIAGARA FALLS INTERNATIONAL AIRPORT		
ALTER KC-135 OPERATIONS FACILITIES	1,650	
NIAGARA FALLS INTERNATIONAL AIRPORT		1,650
SCHENECTADY AIRPORT ANG		
REPLACE UNDERGROUND FUEL STORAGE TANKS	1,050	
SCHENECTADY AIRPORT ANG		1,050
STEWART AIRPORT		
INDUSTRIAL WASTE HOLDING POND	320	
STEWART AIRPORT		320
**AIR NATIONAL GUARD		7,070
AIR FORCE RESERVE		
NIAGARA FALLS IAP		
BASE COMMUNICATIONS CENTER	2,100	
NIAGARA FALLS IAP		2,100
FAMILY HOUSING		
ARMY		
U S MILITARY ACADEMY		
REPLACEMENT CONSTRUCTION (100)	(15,000)	
U S MILITARY ACADEMY FAMILY HOUSING		(15,000)
**NEW YORK		22,970
FAMILY HOUSING		(15,000)

FY 1994 MILITARY CONSTRUCTION TOTAL OBLIGATIONAL AUTHORITY AS ENACTED

ACTIVE, GUARD AND RESERVE FORCES
INSIDE THE UNITED STATES
($ THOUSANDS)

DATA AS OF FEB 1995

STATE/COMP./INSTALLATION -----PROJECT NAME-----	PROJ COST	TOTAL
NORTH CAROLINA		
ARMY		
FORT BRAGG		
MAIN LIBRARY AND REFERENCE CENTER	5,500	
OVERHILLS LAND TRACT	15,000	
SEWAGE TREATMENT PLANT UPGRADE	540	
SIMMONS AIRFIELD LAND PURCHASE	1,450	
TACTICAL EQUIPMENT SHOP	7,100	
TACTICAL EQUIPMENT SHOP	23,000	
WHOLE BRIGADE BARRACKS COMPLEX	71,600	
FORT BRAGG		124,190
NAVY		
CAMP LEJEUNE MARINE CORPS BASE		
LANDFILL	7,690	
MULTI-PURPOSE TRAINING RANGE	5,300	
WASTEWATER TREATMENT PLANT (PHASE I)	28,300	
CAMP LEJEUNE MARINE CORPS BASE		41,290
CAMP LEJEUNE NAVAL HOSPITAL		
BACHELOR ENLISTED QUARTERS	2,370	
CAMP LEJEUNE NAVAL HOSPITAL		2,370
CHERRY POINT MARINE CORPS AIR STATION		
AIRCRAFT MAINTENANCE TRAINING FACILITY	4,040	
COMMUNICATIONS CENTER	3,460	
CHERRY POINT MARINE CORPS AIR STATION		7,500
**NAVY		51,160
AIR FORCE		
POPE AFB		
ADD TO AND ALTER DORMITORIES	4,300	
DINING FACILITY	4,300	
POPE AFB		8,600
SEYMOUR JOHNSON AFB		
ADD TO AND ALTER DORMITORIES	4,900	
MUNITIONS MAINTENANCE SUPPORT FACILITY	480	
SEYMOUR JOHNSON AFB		5,380
**AIR FORCE		13,980
SPECIAL OPERATIONS COMMAND		
FORT BRAGG		
MEDICAL TRNG FAC	18,250	
3SFG/4POG BARRACKS	20,000	
FORT BRAGG		38,250
DOD DEPENDENT SCHOOLS		
FORT BRAGG		
FT BRAGG ELEM SCHOOL	8,838	
FORT BRAGG		8,838
CAMP LEJEUNE MARINE CORPS BASE		
CAMP LEJEUNE AUDITORIUM/BAND ROOM	1,465	
CAMP LEJEUNE MULTI ROOM/STONE ELEM SCHOOL	328	
CAMP LEJEUNE MARINE CORPS BASE		1,793
**DOD DEPENDENT SCHOOLS		10,631
DEFENSE MEDICAL SUPPORT ACTIVITY		
FORT BRAGG		
#HOSPITAL REPLACEMENT PHASE II	35,000	
FORT BRAGG		35,000
AUTHORIZED IN PRIOR YEAR		(35,000)

AUTHORIZED IN PRIOR YEAR

FY 1994 MILITARY CONSTRUCTION TOTAL OBLIGATIONAL AUTHORITY AS ENACTED

ACTIVE, GUARD AND RESERVE FORCES INSIDE THE UNITED STATES ($ THOUSANDS)

DATA AS OF FEB 1995

STATE/COMP./INSTALLATION ----------PROJECT NAME----------	PROJ COST	TOTAL
NORTH CAROLINA		
ARMY NATIONAL GUARD		
FAYETTEVILLE		
ORGANIZATIONAL MAINT SHOP	473	
FAYETTEVILLE		473
ARMY RESERVE		
MOREHEAD CITY		
ADD/ALT USARC/OMS/AMSA (MARINE)	9,335	
MOREHEAD CITY		9,335
FAMILY HOUSING		
ARMY		
FORT BRAGG		
REPLACEMENT CONSTRUCTION (224)	{18,000}	
FORT BRAGG		
FAMILY HOUSING		{18,000}

**NORTH CAROLINA		283,019
AUTHORIZED IN PRIOR YEAR		(35,000)
FAMILY HOUSING		{18,000}
NORTH DAKOTA		
AIR FORCE		
GRAND FORKS AFB		
UNDERGROUND FUEL STORAGE TANKS	2,600	
UPGRADE AIRFIELD PAVEMENT	10,200	
UPGRADE HYDRANT FUELING SYSTEM	3,250	
GRAND FORKS AFB		16,050
MINOT AFB		
REPAIR RUNWAYS & TAXIWAYS	8,500	
UNDERGROUND FUEL STORAGE TANKS	2,000	
MINOT AFB		10,500

**AIR FORCE		26,550
DEFENSE MEDICAL SUPPORT ACTIVITY		
GRAND FORKS AIR FORCE BASE		
LIFE SAFETY UPGRADE	860	
GRAND FORKS AIR FORCE BASE		860
ARMY NATIONAL GUARD		
BISMARCK		
AVIATION C-12 HANGAR	1,300	
BISMARCK		1,300
CAMP GRAFTON (DEVILS LAKE)		
RANGE, MOD RECORD FIRE (MRF)	1,038	
TRNG SITE, HEATING PLANT ADD	1,826	
CAMP GRAFTON (DEVILS LAKE)		2,864

**ARMY NATIONAL GUARD		4,164
AIR NATIONAL GUARD		
HECTOR FIELD		
UPGRADE STORM DRAINAGE	400	
HECTOR FIELD		400

**NORTH DAKOTA		31,974
OHIO		
AIR FORCE		
WRIGHT-PATTERSON AFB		
ADAL ACQUISTION MANAGEMENT CMPLX, PH II	12,850	

FY 1994 MILITARY CONSTRUCTION TOTAL OBLIGATIONAL AUTHORITY AS ENACTED

ACTIVE, GUARD AND RESERVE FORCES
INSIDE THE UNITED STATES
($ THOUSANDS)

DATA AS OF FEB 1995

STATE/COMP./INSTALLATION ----------PROJECT NAME----------	PROJ COST	TOTAL
OHIO		
AIR FORCE		
WRIGHT-PATTERSON AFB		
ADD TO AVIONICS RESEARCH LAB, PHASE II	5,650	
ADD/ALTER ACQUISITION MANAGEMENT CMPLX P2	14,400	
FIRE PROTECTION SYSTEM	1,400	
FIRE STATION	1,230	
RENOVATE ELECTRIC SUBSTATIONS	4,450	
SEAL FUEL CONTAINMENT DIKES	1,500	
UNDERGROUND FUEL STORAGE TANKS	3,200	
WRIGHT-PATTERSON AFB		44,680
DEFENSE LOGISTICS AGENCY		
DEFENSE CONSTRUCTION SUPPLY CENTER		
CHILD DEVELOPMENT CENTER	3,100	
DEFENSE CONSTRUCTION SUPPLY CENTER		3,100
ARMY NATIONAL GUARD		
RICKENBACHER		
TNG SITE, CONSOLIDATED MESS	1,250	
RICKENBACHER		1,250
AIR NATIONAL GUARD		
MANSFIELD LAHM AIRPORT		
MEDICAL TRAINING & DINING FACILITY	2,900	
MANSFIELD LAHM AIRPORT		2,900
TOLEDO EXPRESS AIRPORT		
ADD/ALTER OPERATIONS & TRAINING FACILITY	1,800	
FIRE SUPPRESSION SYSTEM	1,100	
TAXIWAY & ARM/DEARM PADS	1,950	
TOLEDO EXPRESS AIRPORT		4,850
**AIR NATIONAL GUARD		7,750
ARMY RESERVE		
COLUMBUS		
USARC/OMS/AMSA/DS-GS	14,701	
COLUMBUS		14,701
AIR FORCE RESERVE		
YOUNGSTOWN MAP		
WIDEN AIRCRAFT PARKING APRON	7,850	
YOUNGSTOWN MAP		7,850
**OHIO		79,331
OKLAHOMA		
ARMY		
FORT SILL		
CENTRAL VEHICLE WASH FACILITY	7,600	
ENVIRONMENTAL TRAINING CENTER	3,700	
WHOLE BARRACKS RENEWAL	15,700	
FORT SILL		27,000
AIR FORCE		
ALTUS AFB		
C-17 ADD TO ACFT MAINT FACILITY - DBOF T	3,300	
C-17 ADD TO FLT SIMULAT TRN FAC - DBOF T	2,850	
C-17 FIRE STATION - DBOF	780	
DROP ZONE LAND ACQUISITION	780	
ALTUS AFB		7,710
TINKER AFB		
ALTER HYDRANT FUELING SYSTEM	4,129	

FY 1994 MILITARY CONSTRUCTION TOTAL OBLIGATIONAL AUTHORITY AS ENACTED

ACTIVE, GUARD AND RESERVE FORCES INSIDE THE UNITED STATES ($ THOUSANDS)

DATA AS OF FEB 1995

STATE/COMP./INSTALLATION ----------PROJECT NAME----------	PROJ COST	TOTAL
OKLAHOMA		
AIR FORCE		
TINKER AFB		
ENGINEERING AND CONTRACT SUPPORT FACILITY	5,900	
INDTL WASTEWATER REGIONAL CONNECT - DBOF	5,400	
SEAL FUEL CONTAINMENT DIKES	620	
UNDERGROUND FUEL STORAGE TANKS	4,700	
TINKER AFB		20,749
VANCE AFB		
REPAIR AIRFIELD PAVEMENT (RAMP)	5,000	
T-1 SPECIALIZED UPT MAINTENANCE SUPPORT	2,700	
UPGRADE AIRFIELD LIGHTING	3,300	
VANCE AFB		11,000
**AIR FORCE		39,459
ARMY NATIONAL GUARD		
FREDERICK		
ARMORY	1,200	
FREDERICK		1,200
AIR NATIONAL GUARD		
TULSA IAP		
ADD TO AND ALTER FIRE STATION	460	
TULSA IAP		460
WILL ROGERS WORLD AIRPORT		
COMPOSITE SUPPORT FACILITY	3,900	
MOBILITY EQUIPMENT STORAGE WAREHOUSE	950	
WILL ROGERS WORLD AIRPORT		4,850
**AIR NATIONAL GUARD		5,310
**OKLAHOMA		72,969
OREGON		
ARMY NATIONAL GUARD		
CAMP WITHYCOMBE		
CSMS	7,569	
CAMP WITHYCOMBE		7,569
PENDELTON		
AVN LAASF (LIMITED)	3,515	
PENDELTON		3,515
**ARMY NATIONAL GUARD		11,084
AIR NATIONAL GUARD		
KINGSLEY FIELD		
REPAIR RUNWAY/TAXIWAY	8,500	
KINGSLEY FIELD		8,500
PORTLAND IAP		
ADD TO AND ALTER FIRE STATION	500	
DRAINAGE IMPROVEMENTS	950	
PORTLAND IAP		1,450
**AIR NATIONAL GUARD		9,950
**OREGON		21,034
PENNSYLVANIA		
ARMY		
TOBYHANNA ARMY DEPOT		
WATER POLLUTION ABATEMENT	750	
TOBYHANNA ARMY DEPOT		750

FY 1994 MILITARY CONSTRUCTION TOTAL OBLIGATIONAL AUTHORITY AS ENACTED

ACTIVE, GUARD AND RESERVE FORCES
INSIDE THE UNITED STATES
($ THOUSANDS)

DATA AS OF FEB 1995

STATE/COMP./INSTALLATION ----------PROJECT NAME----------	PROJ COST	TOTAL
PENNSYLVANIA		
NAVY		
PHILADELPHIA NAV INACTIVE SHIP MAINT FAC		
BERTHING WHARF IMPROVEMENTS (INCR II)	8,660	
PHILADELPHIA NAV INACTIVE SHIP MAINT FAC		8,660
PHILADELPHIA NAVAL SHIPYARD		
ASBESTOS REMOVAL FACILITY	2,300	
POWER PLANT MODERNIZATION	11,500	
PHILADELPHIA NAVAL SHIPYARD		13,800
PHILADELPHIA NAVY AVIATION SUPPLY OFFICE		
ELECTRICAL DISTRIB SYSTEM UPGRADE - DBOF	1,900	
PHILADELPHIA NAVY AVIATION SUPPLY OFFICE		1,900
**NAVY		24,360
SPECIAL OPERATIONS COMMAND		
OLMSTEAD FIELD, HARRISBURG IAP		
AVION/ECM POD FAC(O)	1,300	
OLMSTEAD FIELD, HARRISBURG IAP		1,300
ARMY NATIONAL GUARD		
FORT INDIANTOWN GAP		
TNG SITE, MIL ED FACILITY	9,200	
FORT INDIANTOWN GAP		9,200
JOHNSTOWN		
ARMORY (AVN) ADDITION	3,309	
AVN, JOINT AASF	5,004	
JOHNSTOWN		8,313
**ARMY NATIONAL GUARD		17,513
AIR NATIONAL GUARD		
FT INDIANTOWN ANG COMMUNICATIONS SITE		
CIVIL ENGINEERING MAINTENANCE SHOPS	850	
FT INDIANTOWN ANG COMMUNICATIONS SITE		850
STATE COLLEGE, ANG STATION		
COMM ELECTRONICS TRAINING COMPLEX	9,700	
STATE COLLEGE, ANG STATION		9,700
**AIR NATIONAL GUARD		10,550
AIR FORCE RESERVE		
GREATER PITTSBURGH IAP		
JET FUEL STORAGE COMPLEX	7,400	
OFF BASE FIRING RANGE	1,300	
GREATER PITTSBURGH IAP		8,700
**PENNSYLVANIA		63,173
RHODE ISLAND		
NAVY		
NEWPORT NAVAL EDUCATION & TRAINING CENTER		
BACHELOR ENLISTED QUARTERS	7,500	
ELECTRICAL DISTR SYS UPGRADE (INCR II)	3,800	
NEWPORT NAVAL EDUCATION & TRAINING CENTER		11,300
DEFENSE MEDICAL SUPPORT ACTIVITY		
NEWPORT NAVAL EDUCATION TRAINING CENTER		
COMPREHENSIVE HEALTH CARE CLINIC PHASE II	4,000	
NEWPORT NAVAL EDUCATION TRAINING CENTER		4,000
AIR NATIONAL GUARD		
COVENTRY AGS		
REPLACE UNDERGROUND FUEL STORAGE TANKS	840	
COVENTRY AGS		840

FY 1994 MILITARY CONSTRUCTION TOTAL OBLIGATIONAL AUTHORITY AS ENACTED

ACTIVE, GUARD AND RESERVE FORCES INSIDE THE UNITED STATES ($ THOUSANDS) — DATA AS OF FEB 1995

STATE/COMP./INSTALLATION ----------PROJECT NAME----------	PROJ COST	TOTAL
RHODE ISLAND		
AIR NATIONAL GUARD		
NORTH SMITHFIELD ANGS		
REPLACE UNDERGROUND FUEL STORAGE TANKS	550	
NORTH SMITHFIELD ANGS		550
QUONSET STATE AIRPORT		
BASE ENGINEER MAINTENANCE FACILITY	2,750	
REPLACE UNDERGROUND FUEL STORAGE TANKS	890	
QUONSET STATE AIRPORT		3,640
**AIR NATIONAL GUARD		5,030
NAVY RESERVE		
NETC NEWPORT		
CBU ADDITION	500	
NETC NEWPORT		500
**RHODE ISLAND		20,830
SOUTH CAROLINA		
ARMY		
FORT JACKSON		
OPERATIONS FACILITY	1,100	
RANGE UPGRADE	1,600	
FORT JACKSON		2,700
NAVY		
BEAUFORT MARINE CORPS AIR STATION		
BACHELOR ENLISTED QUARTERS (PHASE II)	8,390	
JET FUEL DELIVERY SYSTEM IMPROVEMENT	2,510	
BEAUFORT MARINE CORPS AIR STATION		10,900
CHARLESTON NAVAL WEAPONS STATION		
FIRE PROTECTION PIPELINE - DBOF	580	
CHARLESTON NAVAL WEAPONS STATION		580
**NAVY		11,480
AIR FORCE		
CHARLESTON AFB		
FIRE TRAINING FACILITY - DBOF	1,100	
CHARLESTON AFB		1,100
SHAW AFB		
CHILD DEVELOPMENT CENTER	2,650	
CONTROL TOWER	2,700	
UNDERGROUND FUEL STORAGE TANKS	520	
SHAW AFB		5,870
**AIR FORCE		6,970
ARMY NATIONAL GUARD		
COLUMBIA		
CSMS	8,616	
LAND ACQUISITION	950	
COLUMBIA		9,566
FORT JACKSON		
TNG SITE, TRACK VEH WASH RACK	1,009	
FORT JACKSON		1,009
SUMMERVILLE		
ORGAN MAINT SHOP #13	834	
SUMMERVILLE		834
**ARMY NATIONAL GUARD		11,409

FY 1994 MILITARY CONSTRUCTION TOTAL OBLIGATIONAL AUTHORITY AS ENACTED

ACTIVE, GUARD AND RESERVE FORCES
INSIDE THE UNITED STATES
($ THOUSANDS)

DATA AS OF FEB 1995

STATE/COMP./INSTALLATION ----------PROJECT NAME----------	PROJ COST	TOTAL
SOUTH CAROLINA		
AIR NATIONAL GUARD		
MCENTIRE		
REPLACE UNDERGROUND FUEL STORAGE TANKS	1,750	
UPGRADE AIRFIELD LIGHTING AND PAVEMENT	4,200	
MCENTIRE		5,950
ARMY RESERVE		
FORT JACKSON		
USARC/OMS/DS	10,428	
FORT JACKSON		10,428
**SOUTH CAROLINA		48,937
SOUTH DAKOTA		
AIR FORCE		
ELLSWORTH AFB		
ALTER AIRCRAFT MAINTENANCE DOCK	630	
ALTER WASH AND CORROSION CONTROL FACILITY	6,200	
ELLSWORTH AFB		6,830
DEFENSE MEDICAL SUPPORT ACTIVITY		
ELLSWORTH AIR FORCE BASE		
LIFE SAFETY UPGRADE	1,400	
ELLSWORTH AIR FORCE BASE		1,400
ARMY NATIONAL GUARD		
SIOUX FALLS		
ARMORY ADDITION	3,700	
OMS ADDITION/ALTERATION	1,700	
SIOUX FALLS		5,400
AIR NATIONAL GUARD		
JOE FOSS FIELD		
ADAL FUEL SYSTEMS MAINT/CORROSION DOCK	1,700	
ALTER COMPOSITE OPERATIONS & TRAINING FAC	350	
JOE FOSS FIELD		2,050
**SOUTH DAKOTA		15,680
TENNESSEE		
NAVY		
MEMPHIS NAVAL AIR STATION		
FIRE ALARM SYSTEM IMPROVEMENTS	1,100	
POTABLE WATER SYSTEM IMPROVEMENTS	350	
MEMPHIS NAVAL AIR STATION		1,450
AIR FORCE		
ARNOLD ENGINEERING DEV CENTER		
UPGRADE SEWAGE TREATMENT PLANT	1,500	
ARNOLD ENGINEERING DEV CENTER		1,500
DEFENSE MEDICAL SUPPORT ACTIVITY		
MILLINGTON NAVAL AIR STATION		
HOSP LIFE SAFETY/SEISMIC UPGRADE PHASE II	5,000	
MILLINGTON NAVAL AIR STATION		5,000
ARMY NATIONAL GUARD		
CAMDEN		
ARMORY ADDITION/ALTERATION	714	
CAMDEN		714
ELIZABETHTON		
AAUSB ARMORY UNIT STORAGE BLDG	100	
ELIZABETHTON		100

FY 1994 MILITARY CONSTRUCTION TOTAL OBLIGATIONAL AUTHORITY AS ENACTED

ACTIVE, GUARD AND RESERVE FORCES
INSIDE THE UNITED STATES
($ THOUSANDS)

DATA AS OF FEB 1995

STATE/COMP./INSTALLATION ----------PROJECT NAME----------	PROJ COST	TOTAL
TENNESSEE		
ARMY NATIONAL GUARD		
JEFFERSON CITY		
ARMORY	952	
JEFFERSON CITY		952
MILAN		
ARMORY ADDITION	1,357	
MILAN		1,357
SEVIERVILLE		
ARMORY	1,352	
SEVIERVILLE		1,352
SMYRNA		
ARMORY, (MEDICAL)	3,934	
DLOG/CLASS IX WAREHOUSE	710	
SMYRNA		4,644
TIPTONVILLE		
ARMORY, ADDITION/ALTERATION	1,157	
TIPTONVILLE		1,157
WAVERLY		
ARMORY ADDITION/ALTERATION	587	
WAVERLY		587
**ARMY NATIONAL GUARD		10,863
AIR NATIONAL GUARD		
ALCOA AIR NATIONAL GUARD STATION		
ADAL COMMUNICATIONS ELECTRONICS TRNG FAC	1,300	
ALCOA AIR NATIONAL GUARD STATION		1,300
MCGHEE-TYSON AIRPORT		
PMEC ADMINISTRATIVE SUPPORT FACILITY	2,200	
REPLACE UNDERGROUND FUEL STORAGE TANKS	1,100	
MCGHEE-TYSON AIRPORT		3,300
NASHVILLE MAP		
REPLACE UNDERGROUND FUEL STORAGE TANKS	1,000	
NASHVILLE MAP		1,000
**AIR NATIONAL GUARD		5,600
NAVY RESERVE		
NMCRC CHATTANOOGA		
RESCEN REPLACEMENT	3,690	
NMCRC CHATTANOOGA		3,690
**TENNESSEE		28,103
TEXAS		
ARMY		
FORT BLISS		
CONSOLIDATED MAINTENANCE FACILITY	14,000	
TACTICAL EQUIPMENT SHOP	2,800	
TACTICAL EQUIPMENT SHOP	12,800	
FORT BLISS		29,600
FORT HOOD		
BATTALION COMMAND AND CONTROL FACILITY	5,600	
CLOSE COMBAT TACTICAL TRAINER FACILITY	7,500	
COLD/DRY STORAGE FACILITY	13,400	
DEPLOYMENT EQUIPMENT STORAGE FACILITY	1,500	

FY 1994 MILITARY CONSTRUCTION TOTAL OBLIGATIONAL AUTHORITY AS ENACTED

ACTIVE, GUARD AND RESERVE FORCES
INSIDE THE UNITED STATES
($ THOUSANDS)

DATA AS OF FEB 1995

STATE/COMP./INSTALLATION ----------PROJECT NAME----------	PROJ COST	TOTAL
TEXAS		
ARMY		
FORT HOOD		
TACTICAL EQUIPMENT SHOP	5,300	
TEST AND EVALUATION SUPPORT FACILITY	5,200	
WHOLE BARRACKS RENEWAL	18,000	
FORT HOOD		56,500
FORT SAM HOUSTON		
FIRE STATION	1,300	
MULTI-PURPOSE FAMILY SERVICE CENTER	4,351	
FORT SAM HOUSTON		5,651
**ARMY		91,751
NAVY		
CORPUS CHRISTI NAVAL AIR STATION		
BACHELOR ENLISTED QUARTERS IMPROVEMENTS	1,670	
CORPUS CHRISTI NAVAL AIR STATION		1,670
AIR FORCE		
BROOKS AFB		
AIR FORCE CTR FOR ENVIRONMENTAL EXCELLENCE	8,400	
BROOKS AFB		8,400
DYESS AFB		
ADD TO ALTER DORMITORIES	5,200	
UPGRADE HYDRANT FUELING SYSTEM, PHASE II	9,500	
WEAPONS STORAGE AREA SECURITY	890	
DYESS AFB		15,590
GOODFELLOW AFB		
BASE ENGINEERING COMPLEX	3,700	
GOODFELLOW AFB		3,700
KELLY AFB		
ADD TO & ALTER DORMITORIES - DBOF	2,000	
ALT WEAPON SYS SUPPORT CTR, PH II - DBOF	7,800	
C-17 ADAL NDI FACILITY - DBOF	4,900	
C-17 ALTDEPOT AVIONICS FACILITY - DBOF	731	
C-17 ENGINEERING TEST LABORATORY	2,600	
UPGRADE SANITARY SEWER MAINS	3,000	
UPGRADE STORM DRAINAGE SYSTEM, PHASE I	2,900	
UPGRADE TAXIWAY	3,550	
KELLY AFB		27,481
LACKLAND AFB		
ALTER BASE SUPPORT FACILITY	5,400	
BASE CONTRACTING CENTER	2,450	
MISSION SUPPORT CENTER	7,543	
TRAINING SERVICES FACILITIES	5,717	
7-LEVEL TRAINING DORMITORY	8,900	
LACKLAND AFB		30,010
LAUGHLIN AFB		
FIRE STATION	2,400	
UPGRADE AIRFIELD LIGHTING	3,000	
UPGRADE AIRFIELD PAVEMENT	3,032	
LAUGHLIN AFB		8,432
RANDOLPH AFB		
CONTROL TOWER	2,652	
UPGRADE ELECTRICAL DISTRIBUTION SYSTEM	2,500	
RANDOLPH AFB		5,152
REESE AFB		
UNDERGROUND FUEL STORAGE TANKS	900	
REESE AFB		900

FY 1994 MILITARY CONSTRUCTION TOTAL OBLIGATIONAL AUTHORITY AS ENACTED

ACTIVE, GUARD AND RESERVE FORCES INSIDE THE UNITED STATES ($ THOUSANDS)

DATA AS OF FEB 1995

STATE/COMP./INSTALLATION ----------PROJECT NAME----------	PROJ COST	TOTAL
TEXAS		
AIR FORCE		
SHEPPARD AFB		
ADD TO AND ALTER CHILD DEVELOPMENT CENTER	780	
ENJJPT ALTER FLIGHT TRAINING FACILITY	2,200	
FIRE TRAINING FACILITY	850	
7-LEVEL TRAINING DORMITORY	14,200	
SHEPPARD AFB		18,030
**AIR FORCE		117,695
DEFENSE MEDICAL SUPPORT ACTIVITY		
FORT SAM HOUSTON		
COMBAT MEDIC TRAINING COMPLEX	1,400	
#HOSPITAL REPLACEMENT PHASE VII	50,000	
NCO ACADEMY-AMEDD CENTER AND SCHOOL	3,400	
FORT SAM HOUSTON		54,800
AUTHORIZED IN PRIOR YEAR		(50,000)
ARMY NATIONAL GUARD		
CORPUS CHRISTI		
ARMORY ADDITION/ALTERATION	2,719	
OMS	991	
CORPUS CHRISTI		3,710
LUBBOCK		
OMS (AFRC)	1,726	
LUBBOCK		1,726
WESLACO		
ARMORY/OMS	5,567	
WESLACO		5,567
**ARMY NATIONAL GUARD		11,003
AIR NATIONAL GUARD		
ELLINGTON FIELD		
REPLACE UNDERGROUND FUEL STORAGE TANKS	1,600	
ELLINGTON FIELD		1,600
KELLY AFB		
BASE SUPPLY WAREHOUSE	4,300	
REPLACE UNDERGROUND FUEL STORAGE TANKS	560	
KELLY AFB		4,860
**AIR NATIONAL GUARD		6,460
AIR FORCE RESERVE		
KELLY AFB		
RED HORSE STRUCTURAL/UTILITY FACILITY	2,300	
KELLY AFB		2,300
FAMILY HOUSING		
AIR FORCE		
DYESS AFB		
HOUSING MAINTENANCE FACILITY	(281)	
DYESS AFB		
FAMILY HOUSING		(281)
LACKLAND AFB		
FAMILY HOUSING (111 UNITS)	(8,770)	
LACKLAND AFB		
FAMILY HOUSING		(8,770)
**AIR FORCE		
FAMILY HOUSING		(9,051)
**TEXAS		285,679
AUTHORIZED IN PRIOR YEAR		(50,000)
FAMILY HOUSING		(9,051)

AUTHORIZED IN PRIOR YEAR

FY 1994 MILITARY CONSTRUCTION TOTAL OBLIGATIONAL AUTHORITY AS ENACTED

ACTIVE, GUARD AND RESERVE FORCES
INSIDE THE UNITED STATES
($ THOUSANDS)

DATA AS OF FEB 1995

STATE/COMP./INSTALLATION ----------PROJECT NAME----------	PROJ COST	TOTAL
UTAH		
ARMY		
DUGWAY PROVING GROUND		
LIFE SCIENCES TEST FACILITY	16,500	
DUGWAY PROVING GROUND		16,500
TOOELE ARMY DEPOT		
TREATY COMPLIANCE FACILITY	1,500	
TOOELE ARMY DEPOT		1,500
**ARMY		18,000
AIR FORCE		
HILL AFB		
FIRE TRAINING FACILITY - DBOF	880	
UPGDE INDTRL WASTEWATER TRTMNT PLT - DBOF	5,100	
UPGRADE INDUSTRIAL WASTEWATER COLL SYSTEM	6,200	
UPGRADE WATER DISTRIBUTION SYSTEM	2,400	
HILL AFB		14,580
DEFENSE LOGISTICS AGENCY		
DEF REUTILIZATION & MKTG OFC HILL AFB		
FIRE PROTECTION & OPEN STORAGE	1,700	
DEF REUTILIZATION & MKTG OFC HILL AFB		1,700
ARMY NATIONAL GUARD		
CAMP WILLIAMS		
RANGE, INFANTRY SQUAD BATTLE CRSE	1,066	
RANGE, MAC	850	
CAMP WILLIAMS		1,916
AIR NATIONAL GUARD		
SALT LAKE CITY IAP		
ADAL COMMUNICATION AND ELECTRONICS TRNG	850	
ALTER COMPOSITE SUPPORT FACILITY	950	
SITE RESTORATION	2,000	
SALT LAKE CITY IAP		3,800
**UTAH		39,996
VERMONT		
ARMY NATIONAL GUARD		
CAMP JOHNSON		
ORGANIZATIONAL MAINT SHOP	1,002	
CAMP JOHNSON		1,002
COLCHESTER		
TNG SITE, MIL ED FACILITY	3,200	
COLCHESTER		3,200
JERICHO		
TRNG SITE, SUPPORT FACILITIES	304	
JERICHO		304
**ARMY NATIONAL GUARD		4,506
AIR NATIONAL GUARD		
BURLINGTON IAP		
FIRE STATION	1,500	
BURLINGTON IAP		1,500
**VERMONT		6,006
VIRGINIA		
ARMY		
FORT BELVOIR		
ELEMENTARY SCHOOL	8,000	

FY 1994 MILITARY CONSTRUCTION TOTAL OBLIGATIONAL AUTHORITY AS ENACTED

ACTIVE, GUARD AND RESERVE FORCES INSIDE THE UNITED STATES ($ THOUSANDS)

DATA AS OF FEB 1995

STATE/COMP./INSTALLATION -PROJECT NAME-	PROJ COST	TOTAL
VIRGINIA		
ARMY		
FORT BELVOIR		
OPERATIONS FACILITY	860	
FORT BELVOIR		8,860
FORT LEE		
APPLIED INSTRUCTION FACILITY	12,600	
WHOLE BARRACKS RENEWAL	20,000	
FORT LEE		32,600
FORT MYER		
WHOLE BARRACKS RENEWAL	6,800	
FORT MYER		6,800
**ARMY		48,260
NAVY		
CHESAPEAKE MARINE CORPS SEC FORCE BATTN NW		
ACADEMIC INSTRUCTION BUILDING	2,320	
INDOOR RANGE COMPLEX	3,060	
CHESAPEAKE MARINE CORPS SEC FORCE BATTN NW		5,380
CRANEY ISLAND FLT & INDUS SUPPLY CTR ANNEX		
WASTEWATER TREATMENT PLANT MODS - DBOF	11,740	
CRANEY ISLAND FLT & INDUS SUPPLY CTR ANNEX		11,740
NORFOLK CDR OPERATIONAL TEST & EVAL FORCE		
OPERATIONS TEST & EVALUATION MGMT CTR	8,100	
NORFOLK CDR OPERATIONAL TEST & EVAL FORCE		8,100
NORFOLK NAVAL AIR STATION		
BACHELOR ENLISTED QUARTERS	12,270	
NORFOLK NAVAL AIR STATION		12,270
NORFOLK NAVY PUBLIC WORKS CENTER		
TRASH RECYCLE FACILITY ADDITION - DBOF	5,330	
NORFOLK NAVY PUBLIC WORKS CENTER		5,330
OCEANA NAVAL AIR STATION		
FUEL STORAGE TANKS REPLACEMENT	1,800	
OCEANA NAVAL AIR STATION		1,800
PORTSMOUTH NORFOLK NAVAL SHIPYARD		
BACHELOR ENLISTED QUARTERS	13,420	
PORTSMOUTH NORFOLK NAVAL SHIPYARD		13,420
QUANTICO MARINE CORPS COMBAT DEV COMMAND		
ACADEMIC INSTRUCTION BUILDING ALTERATIONS	5,000	
ANTI-ARMOR TRACKING & LIVE FIRE RANGE	3,600	
CHILD DEVELOPMENT CENTER	3,850	
QUANTICO MARINE CORPS COMBAT DEV COMMAND		12,450
WALLOPS IS NAVAL SURFACE WEAPONS CTR DET		
SHIP SELF-DEFENSE ENGINEERING FACILITY	10,170	
WALLOPS IS NAVAL SURFACE WEAPONS CTR DET		10,170
**NAVY		80,660
AIR FORCE		
LANGLEY AFB		
BASE ENGINEERING COMPLEX, PHASE II	5,300	
FIRE STATION	3,850	
RESTORE KING STREET BRIDGE	4,100	
UNDERGROUND FUEL STORAGE TANKS	500	
LANGLEY AFB		13,750

FY 1994 MILITARY CONSTRUCTION TOTAL OBLIGATIONAL AUTHORITY AS ENACTED

ACTIVE, GUARD AND RESERVE FORCES INSIDE THE UNITED STATES ($ THOUSANDS)

DATA AS OF FEB 1995

STATE/COMP./INSTALLATION ----------PROJECT NAME----------	PROJ COST	TOTAL
VIRGINIA		
SPECIAL OPERATIONS COMMAND		
NAVAL AMPHIBIOUS BASE, LITTLE CREEK		
SOF SPECBOATRON PBC SUPPORT	7,500	
NAVAL AMPHIBIOUS BASE, LITTLE CREEK		7,500
DEFENSE LOGISTICS AGENCY		
FT. BELVOIR		
ADMINISTRATIVE BUILDING	5,200	
FT. BELVOIR		5,200
DEFENSE GENERAL SUPPLY CENTER		
ALTER HAZARDOUS MATERIAL WAREHOUSE	2,900	
HAZARDOUS MATERIAL PROCESSING FACILITY	4,600	
SHEDS FOR OIL STORAGE	9,500	
DEFENSE GENERAL SUPPLY CENTER		17,000
**DEFENSE LOGISTICS AGENCY		22,200
DOD DEPENDENT SCHOOLS		
QUANTICO MARINE CORPS COMBAT DEV COMMAND		
QUANTICO HIGH ADDN	422	
QUANTICO MARINE CORPS COMBAT DEV COMMAND		422
DEFENSE MEDICAL SUPPORT ACTIVITY		
FORT EUSTIS		
LIFE SAFETY UPGRADE	3,650	
FORT EUSTIS		3,650
PORTSMOUTH NAVAL HOSPITAL		
#HOSPITAL REPLACEMENT V	20,000	
PORTSMOUTH NAVAL HOSPITAL		20,000
AUTHORIZED IN PRIOR YEAR		(20,000)
**DEFENSE MEDICAL SUPPORT ACTIVITY		23,650
AUTHORIZED IN PRIOR YEAR		(20,000)
AIR NATIONAL GUARD		
CAMP PENDLETON ANGB		
BASE ENGINEER MAINTENANCE AND STORAGE FAC	1,150	
CAMP PENDLETON ANGB		1,150
RICHARD E BYRD IAP		
ADAL FUEL SYSTEMS MAINTENANCE DOCK	1,300	
REPLACE UNDERGROUND FUEL STORAGE TANKS	1,100	
RICHARD E BYRD IAP		2,400
**AIR NATIONAL GUARD		3,550
NAVY RESERVE		
MCRC DAMNECK		
ELECTRONIC MAINT SHOP	1,000	
MCRC DAMNECK		1,000
FAMILY HOUSING		
NAVY		
NAVAL AIR STATION OCEANA		
NEW CONSTRUCTION (COMMUNITY CENTER)	(860)	
NAVAL AIR STATION OCEANA		
FAMILY HOUSING		(860)
NAVAL COMPLEX NORFOLK		
NEW CONSTRUCTION (392 HOMES)	(50,674)	
NAVAL COMPLEX NORFOLK		
FAMILY HOUSING		(50,674)
**NAVY		
FAMILY HOUSING		(51,534)

AUTHORIZED IN PRIOR YEAR

FY 1994 MILITARY CONSTRUCTION TOTAL OBLIGATIONAL AUTHORITY AS ENACTED

ACTIVE, GUARD AND RESERVE FORCES
INSIDE THE UNITED STATES
($ THOUSANDS)

DATA AS OF FEB 1995

STATE/COMP./INSTALLATION ----------PROJECT NAME----------	PROJ COST	TOTAL
VIRGINIA		
AIR FORCE		
LANGLEY AFB		
HOUSING OFFICE	{452}	
LANGLEY AFB		
FAMILY HOUSING		{452}
**VIRGINIA		200,992
AUTHORIZED IN PRIOR YEAR		(20,000)
FAMILY HOUSING		{51,986}
WASHINGTON		
ARMY		
FORT LEWIS		
INCINERATOR BUILDING COMPLETION	14,200	
FORT LEWIS		14,200
NAVY		
BANGOR NAVAL SUBMARINE BASE		
MESS HALL ADDITION	1,720	
OILY WASTE TREATMENT FACILITY	1,380	
BANGOR NAVAL SUBMARINE BASE		3,100
EVERETT NAVAL STATION		
BREAKWATER	22,200	
STEAM PLANT	11,800	
EVERETT NAVAL STATION		34,000
KEYPORT NAVAL UNDERSEA WARFARE CENTER DIV		
HAZARDOUS WASTE STORAGE FACILITY - DBOF	8,980	
KEYPORT NAVAL UNDERSEA WARFARE CENTER DIV		8,980
**NAVY		46,080
AIR FORCE		
FAIRCHILD AFB		
INTELLIGENCE TECHNICAL TRAINING FACILITY	3,500	
FAIRCHILD AFB		3,500
MCCHORD AFB		
ADD TO & ALTER DORMITORIES - DBOF	6,500	
CHILD DEVELOPMENT CTR COMPLEX - DBOF	4,400	
MCCHORD AFB		10,900
**AIR FORCE		14,400
DEFENSE MEDICAL SUPPORT ACTIVITY		
FAIRCHILD AIR FORCE BASE		
UTILITY/LIFE SAFETY UPGRADE	8,250	
FAIRCHILD AIR FORCE BASE		8,250
ARMY NATIONAL GUARD		
YAKIMA TRAINING CENTER (YAKIMA)		
RANGE, MACHINE GUN MODIFICATION	1,527	
YAKIMA TRAINING CENTER (YAKIMA)		1,527
AIR NATIONAL GUARD		
BELLINGHAM MUNICIPAL AIRPORT ANG		
REPLACE UNDERGROUND FUEL STORAGE TANKS	420	
BELLINGHAM MUNICIPAL AIRPORT ANG		420
CAMP MURRAY		
REPLACE UNDERGROUND FUEL STORAGE TANKS	380	
CAMP MURRAY		380
FOUR LAKES COMMUNICATIONS STATION		
REPLACE UNDERGROUND FUEL STORAGE TANKS	360	
FOUR LAKES COMMUNICATIONS STATION		360

FY 1994 MILITARY CONSTRUCTION TOTAL OBLIGATIONAL AUTHORITY AS ENACTED

ACTIVE, GUARD AND RESERVE FORCES INSIDE THE UNITED STATES ($ THOUSANDS)

DATA AS OF FEB 1995

STATE/COMP./INSTALLATION ----------PROJECT NAME----------	PROJ COST	TOTAL
WASHINGTON		
AIR NATIONAL GUARD		
PAINE FIELD ANG STATION		
REPLACE UNDERGROUND FUEL STORAGE TANKS	320	
PAINE FIELD ANG STATION		320
SEATTLE AIR NATIONAL GUARD BASE		
REPLACE UNDERGROUND FUEL STORAGE TANKS	320	
SEATTLE AIR NATIONAL GUARD BASE		320
**AIR NATIONAL GUARD		1,800
ARMY RESERVE		
FORT LEWIS		
USARC/OMS/AMSA/ECS/WAREHOUSE	14,703	
FORT LEWIS		14,703
NAVY RESERVE		
JOINT TRAINING CENTER EVERETT		
RESCEN REPLACEMENT	2,550	
RESCEN REPLACEMENT BANSOR	1,456	
JOINT TRAINING CENTER EVERETT		4,006
FAMILY HOUSING		
NAVY		
NAVAL AIR STATION WHIDBEY ISLAND		
NEW CONSTRUCTION (106 HOMES)	(10,000)	
NAVAL AIR STATION WHIDBEY ISLAND FAMILY HOUSING		(10,000)
NAVAL SUBMARINE BASE BANGOR		
NEW CONSTRUCTION (290 HOMES)	(27,438)	
NAVAL SUBMARINE BASE BANGOR FAMILY HOUSING		(27,438)
**NAVY		
FAMILY HOUSING		(37,438)
AIR FORCE		
FAIRCHILD AFB		
FAMILY HOUSING (1 UNIT)	(184)	
FAIRCHILD AFB FAMILY HOUSING		(184)
**WASHINGTON		104,966
FAMILY HOUSING		(37,622)
WEST VIRGINIA		
AIR NATIONAL GUARD		
E WV REGIONAL APT (MARTINSBURG)		
ADD TO AERIAL PORT TRAINING FACILITY	390	
E WV REGIONAL APT (MARTINSBURG)		390
YEAGER AIRPORT		
REPLACE UNDERGROUND FUEL STORAGE TANKS	370	
YEAGER AIRPORT		370
**AIR NATIONAL GUARD		760
WISCONSIN		
ARMY NATIONAL GUARD		
CAMP DOUGLAS (CAMP WILLIAMS)		
CSMS	11,900	
CAMP DOUGLAS (CAMP WILLIAMS)		11,900

FY 1994 MILITARY CONSTRUCTION TOTAL OBLIGATIONAL AUTHORITY AS ENACTED

ACTIVE, GUARD AND RESERVE FORCES
INSIDE THE UNITED STATES
($ THOUSANDS)

DATA AS OF FEB 1995

STATE/COMP./INSTALLATION ----------PROJECT NAME----------	PROJ COST	TOTAL
WISCONSIN		
AIR NATIONAL GUARD		
BILLY MITCHELL FIELD		
REPLACE UNDERGROUND FUEL STORAGE TANKS	600	
BILLY MITCHELL FIELD		600
TRUAX FIELD		
FIRE STATION	1,400	
TRUAX FIELD		1,400
VOLK FIELD		
REPLACE UNDERGROUND FUEL STORAGE TANKS	510	
VOLK FIELD		510
**AIR NATIONAL GUARD		2,510
NAVY RESERVE		
NMCRC GREEN BAY		
RESCEN ADDITION	650	
NMCRC GREEN BAY		650
AIR FORCE RESERVE		
BILLY MITCHELL FIELD		
ADD FIRE PROTECTION TO AIRCRAFT HANGARS	1,500	
UPGRADE BASE FUELS COMPLEX	1,800	
BILLY MITCHELL FIELD		3,300
FAMILY HOUSING		
ARMY		
FORT MCCOY		
REPLACEMENT CONSTRUCTION (16)	(2,950)	
FORT MCCOY		
FAMILY HOUSING		(2,950)
**WISCONSIN		18,360
FAMILY HOUSING		(2,950)
WYOMING		
AIR FORCE		
F E WARREN AFB		
REMOTE MISSILE CREW FACILITIES	3,800	
RENOVATE SECURITY POLICE OPERATIONS	6,000	
UNDERGROUND FUEL STORAGE TANKS	2,200	
WEAPONS STORAGE AREA SECURITY	640	
F E WARREN AFB		12,640
ARMY NATIONAL GUARD		
CAMP GUERNSEY		
TNG SITE, BKS PHASE III	3,338	
CAMP GUERNSEY		3,338
FAMILY HOUSING		
AIR FORCE		
F E WARREN AFB		
FAMILY HOUSING (107 UNITS)	(10,572)	
F E WARREN AFB		
FAMILY HOUSING		(10,572)
**WYOMING		15,978
FAMILY HOUSING		(10,572)
CONUS CLASSIFIED		
ARMY		
CLASSIFIED LOCATIONS		
CLASSIFIED PROJECT	1,852	
CLASSIFIED LOCATIONS		1,852

FY 1994 MILITARY CONSTRUCTION TOTAL OBLIGATIONAL AUTHORITY AS ENACTED

ACTIVE, GUARD AND RESERVE FORCES
INSIDE THE UNITED STATES
($ THOUSANDS)

DATA AS OF FEB 1995

STATE/COMP./INSTALLATION ----------PROJECT NAME----------	PROJ COST	TOTAL
CONUS CLASSIFIED		
AIR FORCE		
CLASSIFIED LOCATION		
OMEGA FACILITIES	2,600	
SPECIAL TACTICAL UNIT DETENTION FACILITY	5,540	
CLASSIFIED LOCATION		8,140
DEFENSE LEVEL ACTIVITIES		
OSD MILCON		
CLASSIFIED LOCATION	5,600	
OSD MILCON		5,600
AIR FORCE RESERVE		
AIR FORCE RESERVE		
CONSTRUCT AIRCRAFT PARKING APRON	8,000	
AIR FORCE RESERVE		8,000
**CONUS CLASSIFIED		23,592
CONUS VARIOUS		
NAVY		
CONUS VARIOUS		
WASTEWATER COLLECTION & TREATMENT SYSTEM	3,260	
CONUS VARIOUS		3,260

TOTALS

ARMY	1,141,459
FAMILY HOUSING	(139,450)
NAVY	559,438
FAMILY HOUSING	(148,679)
AIR FORCE	1,232,655
AUTHORIZED IN PRIOR YEAR	(5,000)
FAMILY HOUSING	(100,064)
DEFENSEWIDE	411,232
AUTHORIZED IN PRIOR YEAR	(157,000)
INSIDE THE UNITED STATES	3,344,784
AUTHORIZED IN PRIOR YEAR	(162,000)
FAMILY HOUSING	(388,193)

FY 1994 MILITARY CONSTRUCTION TOTAL OBLIGATIONAL AUTHORITY AS ENACTED

ACTIVE, GUARD AND RESERVE FORCES SPECIFIED OUTSIDE THE UNITED STATES ($ THOUSANDS)

DATA AS OF FEB 1995

STATE/COMP./INSTALLATION ----------PROJECT NAME----------	PROJ COST	TOTAL
ANTIGUA		
AIR FORCE		
ANTIGUA ISLAND		
SLFI-UPGRADE BACKUP GENERATOR	1,000	
ANTIGUA ISLAND		1,000
ASCENSION ISLAND		
AIR FORCE		
ASCENSION ISLAND		
SLFI-WASTEWATER TREATMENT PLANT	3,400	
ASCENSION ISLAND		3,400
DIEGO GARCIA		
AIR FORCE		
DIEGO GARCIA		
GPS INSTRUMENTATION FACILITY	1,700	
SATELLITE TRACKING STORAGE FACILITY	560	
DIEGO GARCIA		2,260
DEFENSE LOGISTICS AGENCY		
DIEGO GARCIA		
FUEL TANKAGE	9,558	
DIEGO GARCIA		9,558
**DIEGO GARCIA		11,818
GERMANY		
AIR FORCE		
RAMSTEIN AB		
CHILD DEVELOPMENT CENTER	3,100	
RAMSTEIN AB		3,100
GREENLAND		
AIR FORCE		
THULE AB		
WASTEWATER TREATMENT PLANT	5,492	
THULE AB		5,492
GUAM		
NAVY		
ANDERSON AIR FORCE BASE NAVAL AIR FACILITY		
BACHELOR ENLISTED QUARTERS RENOVATION	3,560	
BACHELOR OFFICER QUARTERS MODERNIZATION	3,750	
ANDERSON AIR FORCE BASE NAVAL AIR FACILITY		7,310
FLEET AND INDUSTRIAL SUPPLY CENTER		
INTERGRATED STORAGE HNDLG FACILITY - DBOF	21,200	
FLEET AND INDUSTRIAL SUPPLY CENTER		21,200
NAVAL HOSPITAL		
CHILD DEVELOPMENT CENTER	2,460	
NAVAL HOSPITAL		2,460
NAVAL STATION		
CHILD DEVELOPMENT CENTER ADDITION	2,020	
EXPLOSIVE ORDNANCE DISPOSAL OPERS FAC	12,500	
NAVAL STATION		14,520
NAVY PUBLIC WORKS CENTER		
SEWERAGE TREATMENT PLANT - DBOF	7,230	
NAVY PUBLIC WORKS CENTER		7,230
**NAVY		52,720

FY 1994 MILITARY CONSTRUCTION TOTAL OBLIGATIONAL AUTHORITY AS ENACTED

ACTIVE, GUARD AND RESERVE FORCES SPECIFIED OUTSIDE THE UNITED STATES ($ THOUSANDS)

DATA AS OF FEB 1995

STATE/COMP./INSTALLATION ----------PROJECT NAME----------	PROJ COST	TOTAL
GUAM		
ARMY NATIONAL GUARD		
BARRIGADA		
USPFO/WAREHOUSE	1,573	
BARRIGADA		1,573
AIR NATIONAL GUARD		
ANDERSON AFB		
BASE SUPPLIES AND EQUIPMENT WAREHOUSE	400	
ANDERSON AFB		400
**GUAM		54,693
ITALY		
NAVY		
NAPLES NAVAL SUPPORT ACTIVITY		
QUALITY OF LIFE (INCREMENT I)	11,740	
NAPLES NAVAL SUPPORT ACTIVITY		11,740
SIGONELLA NAVAL AIR STATION		
CHILD DEVELOPMENT CENTER	3,460	
SIGONELLA NAVAL AIR STATION		3,460
**NAVY		15,200
KWAJALEIN		
ARMY		
KWAJALEIN		
SEWAGE TREATMENT FACILITY	11,200	
UNACCOMPANIED PERSONNEL HOUSING	10,000	
KWAJALEIN		21,200
PUERTO RICO		
AIR NATIONAL GUARD		
PUERTO RICO IAP		
ADD TO AND ALTER F-16 AVIONICS SHOP	320	
ALTER FUEL SYSTEMS MAINTENANCE FACILITY	750	
UPGRADE F-16 ACFT PKNG RAMP SECURITY SYS	2,000	
PUERTO RICO IAP		3,070
SPAIN		
NAVY		
ROTA NAVAL STATION		
CHILD DEVELOPMENT CENTER	2,670	
ROTA NAVAL STATION		2,670
TURKEY		
AIR FORCE		
INCIRLIK AB		
ADD TO AND ALTER DORMITORIES	2,400	
INCIRLIK AB		2,400
UNITED KINGDOM		
AIR FORCE		
RAF MILDENHALL		
NAVAL AIR FACILITY	4,800	
RAF MILDENHALL		4,800
FAMILY HOUSING		
NAVY		
NAVAL ACTIVITIES LONDON		
NEW CONSTRUCTION (81 HOMES)	(15,470)	
NAVAL ACTIVITIES LONDON		
FAMILY HOUSING		(15,470)
**UNITED KINGDOM		4,800
FAMILY HOUSING		(15,470)

FY 1994 MILITARY CONSTRUCTION TOTAL OBLIGATIONAL AUTHORITY AS ENACTED

ACTIVE, GUARD AND RESERVE FORCES — DATA AS OF FEB 1995
SPECIFIED OUTSIDE THE UNITED STATES
($ THOUSANDS)

STATE/COMP./INSTALLATION ----------PROJECT NAME----------	PROJ COST	TOTAL
OVERSEAS CLASSIFIED		
DEFENSE LEVEL ACTIVITIES		
OVERSEAS CLASSIFIED		
CLASSIFIED PROJECT	10,755	
OVERSEAS CLASSIFIED		10,755

TOTALS

ARMY	22,773
NAVY	70,590
FAMILY HOUSING	(15,470)
AIR FORCE	25,922
DEFENSEWIDE	20,313
SPECIFIED OUTSIDE THE UNITED STATES	139,598
FAMILY HOUSING	(15,470)

FY 1994 MILITARY CONSTRUCTION TOTAL OBLIGATIONAL AUTHORITY AS ENACTED

ACTIVE, GUARD AND RESERVE FORCES — DATA AS OF FEB 1995
UNSPECIFIED WORLDWIDE
($ THOUSANDS)

STATE/COMP./INSTALLATION ----------PROJECT NAME----------	PROJ COST	TOTAL
WORLDWIDE UNSPECIFIED		
NATO INFRASTRUCTURE		
DEFENSE LEVEL ACTIVITIES	148,417	
NATO INFRASTRUCTURE		148,417
BASE REALIGNMENT & CLOSURE PART I		
DEFENSE LEVEL ACTIVITIES	77,830	
BASE REALIGNMENT & CLOSURE PART I		77,830
BASE REALIGNMENT & CLOSURE PART II		
DEFENSE LEVEL ACTIVITIES	1,438,942	
BASE REALIGNMENT & CLOSURE PART II		1,438,942
BASE REALIGNMENT & CLOSURE PART III		
DEFENSE LEVEL ACTIVITIES	1,144,000	
BASE REALIGNMENT & CLOSURE PART III		1,144,000
CONTINGENCY CONSTRUCTION		
DEFENSE LEVEL ACTIVITIES	12,400	
CONTINGENCY CONSTRUCTION		12,400
GENERAL REDUCTION		
AIR FORCE RESERVE	-2,780	
GENERAL REDUCTION		-2,780
UNSPECIFIED MINOR CONSTRUCTION		
ARMY	12,000	
NAVY	5,500	
AIR FORCE	6,844	
ON-SITE INSPECTION AGENCY	812	
SPECIAL OPERATIONS COMMAND	4,922	
BALLISTIC MISSILE DEFENSE ORAGNIZATION	2,192	
DEFENSE LEVEL ACTIVITIES	2,000	
JOINT CHIEFS OF STAFF	5,975	
DOD DEPENDENT SCHOOLS	4,000	
DEFENSE MEDICAL SUPPORT ACTIVITY	3,757	
ARMY NATIONAL GUARD	5,000	
AIR NATIONAL GUARD	4,000	
ARMY RESERVE	2,100	
NAVY RESERVE	1,042	
AIR FORCE RESERVE	3,904	
UNSPECIFIED MINOR CONSTRUCTION		64,048
PLANNING AND DESIGN		
ARMY	84,441	
NAVY	64,373	
AIR FORCE	63,882	
SPECIAL OPERATIONS COMMAND	7,900	
BALLISTIC MISSILE DEFENSE ORAGNIZATION	535	
DEFENSE LEVEL ACTIVITIES	10,105	
DEFENSE MEDICAL SUPPORT ACTIVITY	25,865	
ARMY NATIONAL GUARD	10,271	
AIR NATIONAL GUARD	10,868	
ARMY RESERVE	7,004	
NAVY RESERVE	1,359	
AIR FORCE RESERVE	3,989	
PLANNING AND DESIGN		290,592
ENERGY CONSERVATION IMPROVEMENT PROGRAM		
DEFENSE LEVEL ACTIVITIES	50,000	
ENERGY CONSERVATION IMPROVEMENT PROGRAM		50,000
ARMY - HOST NATION SUPPORT		
ARMY	25,000	
ARMY - HOST NATION SUPPORT		25,000
WORLDWIDE UNSPECIFIED		3,248,449

FY 1994 MILITARY CONSTRUCTION TOTAL OBLIGATIONAL AUTHORITY AS ENACTED

ACTIVE, GUARD AND RESERVE FORCES — DATA AS OF FEB 1995
UNSPECIFIED WORLDWIDE
($ THOUSANDS)

STATE/COMP./INSTALLATION ----------PROJECT NAME----------		PROJ COST	TOTAL
WORLDWIDE VARIOUS			
ARMY			
ARMY, PL 103-211 RESCISSION		-22,319	
ARMY			-22,319
NAVY		1,340	
LAND ACQUISITION			1,340
NAVY			
NAVY, PL 103-211 RESCISSION		-13,969	
NAVY			-13,969
HOST NATION INFRASTRUCTURE SUPPORT			
NAVY		2,960	
HOST NATION INFRASTRUCTURE SUPPORT			2,960
AIR FORCE, PL 103-211 RESCISSION		-24,787	
AIR FORCE			-24,787
DEFENSE LEVEL ACTIVITIES, PL 103-211 RESC.		-13,663	
DEFENSE LEVEL ACTIVITIES			-13,663
ARMY NATIONAL GUARD, PL 103-211 RESCISSION		-7,568	
ARMY NATIONAL GUARD			-7,568
INDOOR RANGE MODERNIZATION			
ARMY NATIONAL GUARD		637	
INDOOR RANGE MODERNIZATION			637
ARMORY UNIT STORAGE BUILDINGS			
ARMY NATIONAL GUARD		750	
ARMORY UNIT STORAGE BUILDINGS			750
AIR NATIONAL GUARD		-5,740	
GENERAL REDUCTION			-5,740
AIR NATIONAL GUARD			
AIR NATIONAL GUARD, PL 103-211 RESCISSION		-6,187	
AIR NATIONAL GUARD			-6,187
ARMY RESERVE, PL 103-211 RESCISSION		-2,551	
ARMY RESERVE			-2,551
NAVY RESERVE, PL 103-211 RESCISSION		-626	
NAVY RESERVE			-626
AIR FORCE RESERVE, PL 103-211 RESCISSION		-1,862	
AIR FORCE RESERVE			-1,862
DEFENSE LEVEL ACTIVITIES, PL 103-211 RESC.		-507,692	
DEFENSE LEVEL ACTIVITIES			-507,692
WORLDWIDE VARIOUS	114,765		
NAVY			61,979
AIR FORCE			52,131
DEFENSEWIDE			2,418,297
UNSPECIFIED WORLDWIDE			2,647,172

FY 1994 FAMILY HOUSING TOTAL OBLIGATIONAL AUTHORITY AS ENACTED

DATA AS OF FEB 1995

($ THOUSANDS)

STATE/COMP./INSTALLATION ----------PROJECT NAME----------	PROJ COST	TOTAL
ARMY		
NEW CONSTRUCTION		
CALIFORNIA		
FORT IRWIN		
NEW CONSTRUCTION (220)	25,000	
FORT IRWIN		25,000
HAWAII		
SCHOFIELD BARRACKS		
NEW CONST(124)(18.0M) + REPL(136)(21.0M)	39,000	
NEW CONSTRUCTION (88)	13,000	
SCHOFIELD BARRACKS		52,000
MARYLAND		
FORT MEADE		
REPLACEMENT CONSTRUCTION (275)	26,000	
FORT MEADE		26,000
NEVADA		
HAWTHORNE APP		
DEMOLISH SUBSTANDARD, ABANDONED HSE (100)	500	
HAWTHORNE APP		500
NEW YORK		
U S MILITARY ACADEMY		
REPLACEMENT CONSTRUCTION (100)	15,000	
U S MILITARY ACADEMY		15,000
NORTH CAROLINA		
FORT BRAGG		
REPLACEMENT CONSTRUCTION (224)	18,000	
FORT BRAGG		18,000
WISCONSIN		
FORT MCCOY		
REPLACEMENT CONSTRUCTION (16)	2,950	
FORT MCCOY		2,950
NEW CONSTRUCTION		139,450
CONSTRUCTION IMPROVEMENTS	77,630	77,630
PLANNING	11,805	11,805
TOTAL FAMILY HOUSING, ARMY CONSTRUCTION		228,885
OPERATING EXPENSES		
FURNISHINGS ACCOUNT	55,707	
MANAGEMENT ACCOUNT	88,063	
MISCELLANEOUS ACCOUNT	1,640	
SERVICES ACCOUNT	64,247	
UTILITIES ACCOUNT	306,648	
OPERATING EXPENSES		516,305
LEASING	265,639	265,639
MAINTENANCE OF REAL PROPERTY	287,228	287,228
TOTAL FAMILY HOUSING, ARMY OPERATIONS		1,069,172
MORTGAGE INSURANCE PREMIUMS	17	17
TOTAL FAMILY HOUSING, ARMY DEBT		17
GRAND TOTAL FAMILY HOUSING, ARMY		1,298,074
NAVY		
NEW CONSTRUCTION		
CALIFORNIA		
PUBLIC WORKS CENTER SAN DIEGO		
NEW CONSTRUCTION (318 HOMES)	36,571	
PUBLIC WORKS CENTER SAN DIEGO		36,571

FY 1994 FAMILY HOUSING TOTAL OBLIGATIONAL AUTHORITY AS ENACTED

DATA AS OF FEB 1995

($ THOUSANDS)

STATE/COMP./INSTALLATION -----PROJECT NAME-----	PROJ COST	TOTAL
NAVY		
NEW CONSTRUCTION		
DISTRICT OF COLUMBIA		
PUBLIC WORKS CENTER WASHINGTON DC		
NEW CONSTRUCTION (188 HOMES)	21,556	
PUBLIC WORKS CENTER WASHINGTON DC		21,556
FLORIDA		
PUBLIC WORKS CENTER PENSACOLA		
NEW CONSTRUCTION (SELF HELP/WAREHOUSE)	300	
PUBLIC WORKS CENTER PENSACOLA		300
GEORGIA		
NAVAL SUBMARINE SUPPORT BASE KINGS BAY		
NEW CONSTRUCTION (CMM CNTR/SELF HLP/HHSE)	790	
NAVAL SUBMARINE SUPPORT BASE KINGS BAY		790
MAINE		
NAS BRUNSWICK		
NEW CONSTRUCTION (MOBILE HOME SPACES)	490	
NAS BRUNSWICK		490
VIRGINIA		
NAVAL AIR STATION OCEANA		
NEW CONSTRUCTION (COMMUNITY CENTER)	860	
NAVAL AIR STATION OCEANA		860
NAVAL COMPLEX NORFOLK		
NEW CONSTRUCTION (392 HOMES)	50,674	
NAVAL COMPLEX NORFOLK		50,674
VIRGINIA		51,534
WASHINGTON		
NAVAL AIR STATION WHIDBEY ISLAND		
NEW CONSTRUCTION (106 HOMES)	10,000	
NAVAL AIR STATION WHIDBEY ISLAND		10,000
NAVAL SUBMARINE BASE BANGOR		
NEW CONSTRUCTION (290 HOMES)	27,438	
NAVAL SUBMARINE BASE BANGOR		27,438
WASHINGTON		37,438
UNITED KINGDOM		
NAVAL ACTIVITIES LONDON		
NEW CONSTRUCTION (81 HOMES)	15,470	
NAVAL ACTIVITIES LONDON		15,470
NEW CONSTRUCTION		164,149
CONSTRUCTION IMPROVEMENTS	183,135	183,135
PLANNING	22,924	22,924
TOTAL FAMILY HOUSING, NAVY CONSTRUCTION		370,208
OPERATING EXPENSES		
FURNISHINGS ACCOUNT	36,904	
MANAGEMENT ACCOUNT	79,569	
MISCELLANEOUS ACCOUNT	1,133	
SERVICES ACCOUNT	45,539	
UTILITIES ACCOUNT	192,760	
OPERATING EXPENSES		355,905
LEASING	113,308	113,308
MAINTENANCE OF REAL PROPERTY	302,754	302,754
TOTAL FAMILY HOUSING, NAVY OPERATIONS		771,967

FY 1994 FAMILY HOUSING TOTAL OBLIGATIONAL AUTHORITY AS ENACTED

DATA AS OF FEB 1995

($ THOUSANDS)

STATE/COMP./INSTALLATION ----------PROJECT NAME----------	PROJ COST	TOTAL
NAVY		
MORTGAGE INSURANCE PREMIUMS	88	88
TOTAL FAMILY HOUSING, NAVY DEBT		88
GRAND TOTAL FAMILY HOUSING, NAVY		1,142,263
AIR FORCE		
NEW CONSTRUCTION		
ALABAMA		
MAXWELL AFB		
FAMILY HOUSING (55 UNITS)	4,080	
MAXWELL AFB		4,080
ARKANSAS		
LITTLE ROCK AFB		
HOUSING OFFICE AND MAINTENANCE FACILITY	980	
LITTLE ROCK AFB		980
CALIFORNIA		
VANDENBERG AFB		
FAMILY HOUSING (166 UNITS)	21,907	
VANDENBERG AFB		21,907
FLORIDA		
PATRICK AFB		
FAMILY HOUSING (155 UNITS)	15,388	
PATRICK AFB		15,388
TYNDALL AFB		
INFRASTRUCTURE	5,732	
TYNDALL AFB		5,732
FLORIDA		21,120
GEORGIA		
ROBINS AFB		
FAMILY HOUSING (118 UNITS)	7,424	
ROBINS AFB		7,424
ILLINOIS		
SCOTT AFB		
CARDINAL CREEK PHASE II	10,000	
SCOTT AFB		10,000
LOUISIANA		
BARKSDALE AFB		
FAMILY HOUSING (117 UNITS)	8,578	
BARKSDALE AFB		8,578
MASSACHUSETTS		
HANSCOM AFB		
FAMILY HOUSING (46 UNITS)	5,135	
HANSCOM AFB		5,135
MONTANA		
MALMSTROM AFB		
HOUSING OFFICE	581	
MALMSTROM AFB		581
TEXAS		
DYESS AFB		
HOUSING MAINTENANCE FACILITY	281	
DYESS AFB		281
LACKLAND AFB		
FAMILY HOUSING (111 UNITS)	8,770	
LACKLAND AFB		8,770
TEXAS		9,051

FY 1994 FAMILY HOUSING TOTAL OBLIGATIONAL AUTHORITY AS ENACTED

DATA AS OF FEB 1995

($ THOUSANDS)

STATE/COMP./INSTALLATION ----------PROJECT NAME----------	PROJ COST	TOTAL
AIR FORCE		
NEW CONSTRUCTION		
VIRGINIA		
LANGLEY AFB		
HOUSING OFFICE	452	
LANGLEY AFB		452
WASHINGTON		
FAIRCHILD AFB		
FAMILY HOUSING (1 UNIT)	184	
FAIRCHILD AFB		184
WYOMING		
F E WARREN AFB		
FAMILY HOUSING (107 UNITS)	10,572	
F E WARREN AFB		10,572
NEW CONSTRUCTION		100,064
CONSTRUCTION IMPROVEMENTS	75,070	75,070
PLANNING	11,901	11,901
TOTAL FAMILY HOUSING, AIR FORCE CONSTRUCTION		187,035
OPERATING EXPENSES		
FURNISHINGS ACCOUNT	43,543	
MANAGEMENT ACCOUNT	44,282	
MISCELLANEOUS ACCOUNT	4,639	
SERVICES ACCOUNT	28,183	
UTILITIES ACCOUNT	148,036	
OPERATING EXPENSES		268,683
LEASING	118,266	118,266
MAINTENANCE OF REAL PROPERTY	403,942	403,942
TOTAL FAMILY HOUSING, AIR FORCE OPERATIONS		790,891
MORTGAGE INSURANCE PREMIUMS	21	21
TOTAL FAMILY HOUSING, AIR FORCE DEBT		21
GRAND TOTAL FAMILY HOUSING, AIR FORCE		977,947
NATIONAL SECURITY AGENCY		
CONSTRUCTION IMPROVEMENTS	50	50
OPERATING EXPENSES		
FURNISHINGS ACCOUNT	16	
MANAGEMENT ACCOUNT	62	
MISCELLANEOUS ACCOUNT	26	
SERVICES ACCOUNT	366	
UTILITIES ACCOUNT	372	
OPERATING EXPENSES		842
LEASING	10,105	10,105
MAINTENANCE OF REAL PROPERTY	228	228
TOTAL FAMILY HOUSING, NSA		11,225
DEF INTELLIGENCE AGENCY		
OPERATING EXPENSES		
FURNISHINGS ACCOUNT	1,441	
OPERATING EXPENSES		1,441

FY 1994 FAMILY HOUSING TOTAL OBLIGATIONAL AUTHORITY AS ENACTED

DATA AS OF FEB 1995

($ THOUSANDS)

STATE/COMP./INSTALLATION ----------PROJECT NAME----------	PROJ COST	TOTAL
DEF INTELLIGENCE AGENCY		
LEASING	12,368	12,368
TOTAL FAMILY HOUSING, DIA		13,809
DEFENSE LOGISTICS AGENCY		
CONSTRUCTION IMPROVEMENTS	109	109
OPERATING EXPENSES		
FURNISHINGS ACCOUNT	41	
MANAGEMENT ACCOUNT	158	
SERVICES ACCOUNT	50	
UTILITIES ACCOUNT	451	
OPERATING EXPENSES		700
MAINTENANCE OF REAL PROPERTY	653	653
TOTAL FAMILY HOUSING, DLA		1,462
GRAND TOTAL FAMILY HOUSING, DEFENSE		26,496
ARMY		
PAYMENT TO HOMEOWNERS	9,631	9,631
OTHER OPERATING COSTS	27,319	27,319
ACQUISITION OF REAL PROPERTY	109,426	109,426
ARMY		146,376

FY 1995 MILITARY CONSTRUCTION TOTAL OBLIGATIONAL AUTHORITY AS ENACTED

ACTIVE, GUARD AND RESERVE FORCES — DATA AS OF FEB 1995
INSIDE THE UNITED STATES
($ THOUSANDS)

STATE/COMP./INSTALLATION ----------PROJECT NAME----------	PROJ COST	TOTAL
ALABAMA		
ARMY		
REDSTONE ARSENAL		
PHYSICAL FITNESS TRAINING CENTER	2,600	
REDSTONE ARSENAL		2,600
AIR FORCE		
MAXWELL AFB		
STUDENT DORMITORIES	9,600	
MAXWELL AFB		9,600
ARMY NATIONAL GUARD		
MOBILE		
AASF	7,200	
MOBILE		7,200
AIR NATIONAL GUARD		
ABSTON ANG STATION		
RELOCATE 232 COMBAT COMM SQ	7,100	
ABSTON ANG STATION		7,100
BIRMINGHAM MAP		
ACFT PARKING APRON & HYDRANT REFUELING SYS	15,000	
ADAL SQUADRON OPERATIONS FACILITY	1,100	
COMMUNICATIONS FACILITY	1,700	
UPGRADE DRAINAGE SYSTEM	2,500	
BIRMINGHAM MAP		20,300
DANNELLY FIELD		
REPLACE UNDERGROUND FUEL STORAGE TANKS	700	
DANNELLY FIELD		700

**AIR NATIONAL GUARD		28,100
FAMILY HOUSING		
AIR FORCE		
MAXWELL AFB		
FAMILY HOUSING (25 UNITS)	(2,100)	
MAXWELL AFB		
FAMILY HOUSING		(2,100)

**ALABAMA		47,500
FAMILY HOUSING		(2,100)
ALASKA		
AIR FORCE		
CAPE LISBURNE		
UPGRADE FUEL STORAGE SYSTEM	2,800	
CAPE LISBURNE		2,800
ELMENDORF AFB		
COMMUNITY CENTER UTILITIES	1,000	
JOINT MOBILITY RAMP	4,000	
ELMENDORF AFB		5,000

**AIR FORCE		7,800
DEFENSE MEDICAL SUPPORT ACTIVITY		
ELMENDORF AIR FORCE BASE		
#HOSPITAL REPLACEMENT PHASE III	66,000	
ELMENDORF AIR FORCE BASE		66,000
AUTHORIZED IN PRIOR YEAR		(66,000)
ARMY NATIONAL GUARD		
BETHEL		
AVN OPS FAC	6,380	
BETHEL		6,380

AUTHORIZED IN PRIOR YEAR

FY 1995 MILITARY CONSTRUCTION TOTAL OBLIGATIONAL AUTHORITY AS ENACTED

ACTIVE, GUARD AND RESERVE FORCES
INSIDE THE UNITED STATES
($ THOUSANDS)

DATA AS OF FEB 1995

STATE/COMP./INSTALLATION ----------PROJECT NAME----------	PROJ COST	TOTAL
ALASKA		
AIR NATIONAL GUARD		
KULIS ANGB		
BASE ENGINEER AND DISASTER FAC	5,300	
KULIS ANGB		5,300
FAMILY HOUSING		
ARMY		
FT RICHARDSON		
REPLACEMENT CONSTRUCTION (72)	(5,000)	
FT RICHARDSON		
FAMILY HOUSING		(5,000)
**ALASKA		85,480
AUTHORIZED IN PRIOR YEAR		(66,000)
FAMILY HOUSING		(5,000)
ARIZONA		
AIR FORCE		
LUKE AFB		
STUDENT PILOT QUARTERS	4,900	
LUKE AFB		4,900
AIR FORCE RESERVE		
LUKE AFB		
AVIONICS MAINTENANCE FACILITY	1,800	
SQUADRON OPERATIONS FACILITY	1,900	
LUKE AFB		3,700
FAMILY HOUSING		
AIR FORCE		
DAVIS-MONTHAN AFB		
FAMILY HOUSING (120 UNITS)	(10,029)	
DAVIS-MONTHAN AFB		
FAMILY HOUSING		(10,029)
**ARIZONA		8,600
FAMILY HOUSING		(10,029)
ARKANSAS		
AIR FORCE		
LITTLE ROCK AFB		
DORMITORY	4,800	
LITTLE ROCK AFB		4,800
ARMY NATIONAL GUARD		
SEARCY		
ARMORY	2,415	
SEARCY		2,415
WARREN		
OMS	802	
WARREN		802
**ARMY NATIONAL GUARD		3,217
AIR NATIONAL GUARD		
FT SMITH MAP		
MUNITIONS MAINT STOR COMPLEX	2,200	
REPLACE UNDERGROUND FUEL STORAGE TANKS	440	
FT SMITH MAP		2,640
**ARKANSAS		10,657

FY 1995 MILITARY CONSTRUCTION TOTAL OBLIGATIONAL AUTHORITY AS ENACTED

ACTIVE, GUARD AND RESERVE FORCES — DATA AS OF FEB 1995
INSIDE THE UNITED STATES
($ THOUSANDS)

STATE/COMP./INSTALLATION ----------PROJECT NAME----------	PROJ COST	TOTAL
CALIFORNIA		
ARMY		
FT IRWIN		
NTC ARMY AIRFIELD (PH 1)	10,000	
FT IRWIN		10,000
NAVY		
CAMP PENDLETON AMPHIBIOUS TASK FORCE		
LANDING CRAFT AIR CUSHION FACS (INCR V)	10,700	
CAMP PENDLETON AMPHIBIOUS TASK FORCE		10,700
CAMP PENDLETON MARINE CORPS AIR STATION		
AIRFLD COMMUNICATIONS/ELEC INFRASTRUCTURE	6,290	
CAMP PENDLETON MARINE CORPS AIR STATION		6,290
CAMP PENDLETON MARINE CORPS BASE		
AMMUNITION HANDLING FACILITY	570	
CAMP PENDLETON MARINE CORPS BASE		570
CHINA LAKE NAVAL AIR WARFARE CTR WPNS DIV		
AIRCRAFT READY FUEL STORAGE FACILITY	6,000	
CHINA LAKE NAVAL AIR WARFARE CTR WPNS DIV		6,000
EL CENTRO NAVAL AIR FACILITY		
POTABLE WATER DISTRIBUTION SYSTEM UPGRADE	1,500	
WASTEWATER TREATMENT PLANT UPGRADE	1,500	
EL CENTRO NAVAL AIR FACILITY		3,000
LEMOORE NAVAL AIR STATION		
BACHELOR ENLISTED QUARTERS MODERNIZATION	7,000	
LEMOORE NAVAL AIR STATION		7,000
NORTH ISLAND NAVAL AIR STATION		
DREDGING	18,830	
NORTH ISLAND NAVAL AIR STATION		18,830
PORT HUENEME NAVAL CONSTR BATTALION CTR		
ABRASIVE BLAST AND PAINT SPRAY FACILITY	4,850	
WATER PROCESSING SYSTEM UPGRADE	4,800	
PORT HUENEME NAVAL CONSTR BATTALION CTR		9,650
SAN DIEGO MARINE CORPS RECRUIT DEPOT		
PERSONAL HYGIENE FACILITIES	1,090	
SAN DIEGO MARINE CORPS RECRUIT DEPOT		1,090
SAN DIEGO NAVAL STATION		
CHAPEL AND RELIGIOUS EDUCATION FACILITY	4,100	
SAN DIEGO NAVAL STATION		4,100
TWENTYNINE PALMS MARCORP AIR-GRND COMB CTR		
SMALL ARMS RANGE MODERNIZATION	2,900	
TWENTYNINE PALMS MARCORP AIR-GRND COMB CTR		2,900

**NAVY		70,130
AIR FORCE		
BEALE AFB		
CONSOLIDATED SUPPORT CTR	10,400	
STORM DRAINAGE FACILITIES	1,450	
BEALE AFB		11,850
EDWARDS AFB		
F-22 ALTER ENGINEERING TEST FACILITY	4,550	
UPGRADE HYDRANT FUELING SYSTEM	2,500	
EDWARDS AFB		7,050
MCCLELLAN AFB		
NEAR FIELD TEST RANGE	8,500	
MCCLELLAN AFB		8,500

FY 1995 MILITARY CONSTRUCTION TOTAL OBLIGATIONAL AUTHORITY AS ENACTED

ACTIVE, GUARD AND RESERVE FORCES INSIDE THE UNITED STATES ($ THOUSANDS)

DATA AS OF FEB 1995

STATE/COMP./INSTALLATION ----------PROJECT NAME----------	PROJ COST	TOTAL
CALIFORNIA		
AIR FORCE		
TRAVIS AFB		
DORMITORY	2,300	
FIRE TRAINING FACILITY	1,300	
TRAVIS AFB		3,600
VANDENBERG AFB		
FIRE TRAINING FACILITY	1,550	
SLFI-UPGRADE NATURAL GAS SYSTEM	5,000	
VANDENBERG AFB		6,550
**AIR FORCE		37,550
SPECIAL OPERATIONS COMMAND		
SAN DEIGO		
SOF PBC PIER UPGRADE	3,400	
SAN DEIGO		3,400
DEFENSE LOGISTICS AGENCY		
DEF CONTRACT MGMT OFC - EL SUGUNDO		
ADMINISTRATIVE BUILDING(CONJUNCTIVE FUND)	5,100	
DEF CONTRACT MGMT OFC - EL SUGUNDO		5,100
DEFENSE MEDICAL SUPPORT ACTIVITY		
MCCLELLAN AIR FORCE BASE		
LIFE SAFETY/SEISMIC/UTILITY UPGRADE	10,280	
MCCLELLAN AIR FORCE BASE		10,280
ARMY NATIONAL GUARD		
CAMP ROBERTS		
RANGE, COMBAT PISTOL QUAL CRSE	952	
RANGE, MODIFIED RECORD FIRE	3,910	
CAMP ROBERTS		4,862
LOS ALAMITOS AFRC		
TRN SITE, DIRECT SPT LOG FAC	4,218	
LOS ALAMITOS AFRC		4,218
**ARMY NATIONAL GUARD		9,080
AIR NATIONAL GUARD		
FRESNO ANGB		
SITE RESTORATION	3,500	
FRESNO ANGB		3,500
MOFFETT NAS		
ALTER VEHICLE MAINTENANCE FACILITY	400	
MOFFETT NAS		400
NO HIGHLANDS ANG STATION		
REPLACE UNDERGROUND FUEL STORAGE TANKS	400	
NO HIGHLANDS ANG STATION		400
**AIR NATIONAL GUARD		4,300
AIR FORCE RESERVE		
MARCH AFB		
REPLACE SUBSTATION	3,900	
MARCH AFB		3,900
FAMILY HOUSING		
NAVY		
MARINE CORPS BASE CAMP PENDLETON		
NEW CONSTRUCTION (196 HOMES)	(28,552)	
MARINE CORPS BASE CAMP PENDLETON FAMILY HOUSING		(28,552)

FY 1995 MILITARY CONSTRUCTION TOTAL OBLIGATIONAL AUTHORITY AS ENACTED

ACTIVE, GUARD AND RESERVE FORCES INSIDE THE UNITED STATES ($ THOUSANDS)

DATA AS OF FEB 1995

STATE/COMP./INSTALLATION ----------PROJECT NAME----------	PROJ COST	TOTAL
CALIFORNIA		
NAVY		
PUBLIC WORKS CENTER SAN DIEGO		
NEW CONSTRUCTION (136 HOMES)	(18,262)	
PUBLIC WORKS CENTER SAN DIEGO		
FAMILY HOUSING		(18,262)
**NAVY		
FAMILY HOUSING		(46,814)
AIR FORCE		
BEALE AFB		
FAMILY HOUSING (76 UNITS)	(8,842)	
BEALE AFB		
FAMILY HOUSING		(8,842)
EDWARDS AFB		
FAMILY HOUSING (34 UNITS)	(4,629)	
EDWARDS AFB		
FAMILY HOUSING		(4,629)
LOS ANGELES AFS		
FAMILY HOUSING (50 UNITS)	(8,962)	
LOS ANGELES AFS		
FAMILY HOUSING		(8,962)
VANDENBERG AFB		
FAMILY HOUSING (128 UNITS)	(16,460)	
VANDENBERG AFB		
FAMILY HOUSING		(16,460)
**AIR FORCE		
FAMILY HOUSING		(38,893)
**CALIFORNIA		153,740
FAMILY HOUSING		(85,707)
COLORADO		
AIR FORCE		
PETERSON AFB		
UNDERGROUND FUEL STORAGE TANKS	1,750	
PETERSON AFB		1,750
ARMY NATIONAL GUARD		
DENVER		
ARMORY	5,000	
DENVER		5,000
ENGLEWOOD		
ARMORY	2,725	
ENGLEWOOD		2,725
**ARMY NATIONAL GUARD		7,725
AIR NATIONAL GUARD		
BUCKLEY ANGB		
ADD TO F-16 FUEL CELL DOCK	1,300	
AIRCRAFT WASHRACK AND DEICING PAD	400	
BUCKLEY ANGB		1,700
FAMILY HOUSING		
ARMY		
FORT CARSON		
REPLACEMENT CONSTRUCTION (145)	(16,500)	
FORT CARSON		
FAMILY HOUSING		(16,500)
**COLORADO		11,175
FAMILY HOUSING		(16,500)

FY 1995 MILITARY CONSTRUCTION TOTAL OBLIGATIONAL AUTHORITY AS ENACTED

ACTIVE, GUARD AND RESERVE FORCES
INSIDE THE UNITED STATES
($ THOUSANDS)

DATA AS OF FEB 1995

STATE/COMP./INSTALLATION ----------PROJECT NAME----------	PROJ COST	TOTAL
CONNECTICUT		
ARMY NATIONAL GUARD		
GROTON		
AVN, REPAIR DEPOT ADD/ALT	9,000	
GROTON		9,000
DELAWARE		
AIR FORCE		
DOVER AFB		
DORMITORY	4,600	
MOBLILTY/PASSENGER PROCESSING CTR	5,900	
DOVER AFB		10,500
DISTRICT OF COLUMBIA		
DEF INTELLIGENCE AGENCY		
BOLLING AFB		
CHILLER COOLING TOWER DIAC	600	
BOLLING AFB		600
FAMILY HOUSING		
AIR FORCE		
BOLLING AFB		
FAMILY HOUSING (100 UNITS)	(9,000)	
BOLLING AFB		
FAMILY HOUSING		(9,000)
**DISTRICT OF COLUMBIA		600
FAMILY HOUSING		(9,000)
FLORIDA		
NAVY		
JACKSONVILLE FLT & INDUSTRIAL SUPPLY CENTER		
HAZARDOUS AND FLAMMABLE STOREHOUSE ADDN	2,200	
JACKSONVILLE FLT & INDUSTRIAL SUPPLY CENTER		2,200
PENSACOLA NAVAL AIR STATION		
AIR TRAFFIC CONTROL TOWER	2,100	
PENSACOLA NAVAL AIR STATION		2,100
**NAVY		4,300
AIR FORCE		
CAPE CANAVERAL AFS		
CORROSION CONTROL FACILITY	1,700	
DELTA LAUNCH OPERATIONS FACILITY	7,000	
SLFI-UPGRADE ELECTRICAL DISTRIBUTION SYS	1,750	
CAPE CANAVERAL AFS		10,450
EGLIN AFB		
RENOVATE CLIMATIC TEST CHAMBER PHASE III	20,000	
EGLIN AFB		20,000
**AIR FORCE		30,450
SPECIAL OPERATIONS COMMAND		
EGLIN AUX FIELD 9		
HC-130 PARK APRON (H)	7,500	
MC-130 NOSE DOCK (H)	5,000	
SIMULATOR FAC ADD (H)	4,800	
SOF AQUATIC TRANING	2,900	
EGLIN AUX FIELD 9		20,200
ARMY NATIONAL GUARD		
CAMP BLANDING		
TRNG SITE, WASTEWATER TREAT PLANT	2,083	
CAMP BLANDING		2,083

FY 1995 MILITARY CONSTRUCTION TOTAL OBLIGATIONAL AUTHORITY AS ENACTED

ACTIVE, GUARD AND RESERVE FORCES INSIDE THE UNITED STATES ($ THOUSANDS)

DATA AS OF FEB 1995

STATE/COMP./INSTALLATION ----------PROJECT NAME----------	PROJ COST	TOTAL
FLORIDA		
AIR FORCE RESERVE		
EGLIN AFB		
RENOVATE AIRMEN DINING FACILITY	2,650	
EGLIN AFB		2,650
HOMESTEAD AFB		
HYDRANT AND HOT PIT FUELING SYSTEM	2,000	
MOBILITY PROCESSING SUPPORT SYSTEM	1,150	
RENOVATE BARRACKS QUARTERS	2,550	
REPAIR PHYSICAL FITNESS CENTER	1,400	
HOMESTEAD AFB		7,100
**AIR FORCE RESERVE		9,750
FAMILY HOUSING		
AIR FORCE		
PATRICK AFB		
FAMILY HOUSING (75 UNITS)	(7,145)	
PATRICK AFB		
FAMILY HOUSING		(7,145)
**FLORIDA		66,783
FAMILY HOUSING		(7,145)
GEORGIA		
ARMY		
FORT BENNING		
MOBILIZATION DEPLOYMENT WAREHOUSE	4,650	
UPGRADE CARMOUCHE TANK RANGE	1,900	
FORT BENNING		6,550
FORT GORDON		
BRIGADE VEHICLE MAINTENANCE FACILITY	8,600	
CENTRAL VEHICLE WASH FACILITY	1,650	
CONSOLIDATED MAINTENANCE FACILITY	11,000	
SECURE COMPARTMENTED INFORMATION FACILITY	2,500	
WHOLE BARRACKS RENEWAL	21,000	
FORT GORDON		44,750
**ARMY		51,300
AIR FORCE		
MOODY AFB		
CONSTRUCT UEPH DORMITORY	3,800	
SUPPLY/WRSK WAREHOUSE	1,600	
UPGRADE AIRFIELD PAVEMENTS	8,000	
MOODY AFB		13,400
ROBINS AFB		
ALTER WEAPONS SYSTEM SUPPORT CENTER	4,700	
J-STARS ADD TO INTEGRATED SUPPORT FACILITY	3,100	
J-STARS DORMITORY	5,525	
J-STARS EXPANDED FLIGHT KITCHEN	1,850	
J-STARS UTILITIES/ MISCELLANEOUS SUPPORT	3,825	
UPGRADE STORM DRAINAGE SYSTEM	2,200	
ROBINS AFB		21,200
**AIR FORCE		34,600
DEFENSE MEDICAL SUPPORT ACTIVITY		
FORT MCPHERSON		
MEDICAL/DENTAL CLINIC REPLACEMENT	13,300	
FORT MCPHERSON		13,300

FY 1995 MILITARY CONSTRUCTION TOTAL OBLIGATIONAL AUTHORITY AS ENACTED

ACTIVE, GUARD AND RESERVE FORCES INSIDE THE UNITED STATES ($ THOUSANDS) — DATA AS OF FEB 1995

STATE/COMP./INSTALLATION ----------PROJECT NAME----------	PROJ COST	TOTAL
GEORGIA		
ARMY NATIONAL GUARD		
FORT STEWART (HINESVILLE)		
REG TRNG SITE-MAINT	2,400	
FORT STEWART (HINESVILLE)		2,400
AIR NATIONAL GUARD		
ROBINS AFB		
B-1 CONSOLIDATED AIRCRAFT SPT/HYDRANT SYS	9,400	
B-1 HANGER COMPLEX	8,400	
ROBINS AFB		17,800
ARMY RESERVE		
FORT MCPHERSON		
USAR COMMAND HQ BLDG PH II	21,400	
FORT MCPHERSON		21,400
NAVY RESERVE		
DOBBINS AFB		
RESERVE TRAINING CENTER ADDITION	4,600	
DOBBINS AFB		4,600
HMS 41 DET MARIETTA		
RESERVE TRAINING BUILDING	2,650	
HMS 41 DET MARIETTA		2,650

**NAVY RESERVE		7,250
AIR FORCE RESERVE		
DOBBINS AFB		
FIRE FIGHTER DEVELOPMENT CENTER	1,100	
DOBBINS AFB		1,100
FAMILY HOUSING		
ARMY		
FORT STEWART		
#REPLACEMENT CONSTRUCTION (120)		
(MEMO-NON-ADD)	(9,700)	
REPLACEMENT CONSTRUCTION (128)	{10,600}	
FORT STEWART		
(MEMO-NON-ADD)		(9,700)
FAMILY HOUSING		{10,600}

**GEORGIA		149,150
(MEMO-NON-ADD)		(9,700)
FAMILY HOUSING		{10,600}
HAWAII		
ARMY		
SCHOFIELD BARRACKS		
WHOLE BARRACKS RENEWAL	20,700	
SCHOFIELD BARRACKS		20,700
NAVY		
KANEOHE BAY MARINE CORPS AIR STATION		
CHILD DEVELOPMENT CENTER	4,900	
KANEOHE BAY MARINE CORPS AIR STATION		4,900
AIR NATIONAL GUARD		
HICKAM AFB		
REPLACE UNDERGROUND FUEL STORAGE TANKS	1,000	
HICKAM AFB		1,000
ARMY RESERVE		
FORT SHAFTER		
USAR CENTER	9,500	
FORT SHAFTER		9,500

AUTHORIZED IN PRIOR YEAR

FY 1995 MILITARY CONSTRUCTION TOTAL OBLIGATIONAL AUTHORITY AS ENACTED

ACTIVE, GUARD AND RESERVE FORCES
INSIDE THE UNITED STATES
($ THOUSANDS)

DATA AS OF FEB 1995

STATE/COMP./INSTALLATION ----------PROJECT NAME----------	PROJ COST	TOTAL
HAWAII		
FAMILY HOUSING		
ARMY		
SCHOFIELD BARRACKS		
REPLACEMENT CONSTRUCTION (190)	(26,000)	
SCHOFIELD BARRACKS		
FAMILY HOUSING		(26,000)
NAVY		
NAVAL COMPLEX, OAHU		
100 UNITS REPLACEMENT	(16,000)	
NAVAL COMPLEX, OAHU		
FAMILY HOUSING		(16,000)

**HAWAII		36,100
FAMILY HOUSING		(42,000)
IDAHO		
AIR FORCE		
MOUNTAIN HOME AFB		
DORMITORY	4,950	
REPAIR APRONS	11,000	
MOUNTAIN HOME AFB		15,950
ARMY NATIONAL GUARD		
POST FALLS		
ARMORY ADD/ALT	2,500	
POST FALLS		2,500
AIR NATIONAL GUARD		
BOISE AIRPORT		
UPGRADE BASE DRAINAGE	380	
BOISE AIRPORT		380
FAMILY HOUSING		
AIR FORCE		
MOUNTAIN HOME AFB		
FAMILY HOUSING (4 UNITS)	(881)	
FAMILY HOUSING (60 UNITS)	(5,712)	
MOUNTAIN HOME AFB		
FAMILY HOUSING		(6,593)

**IDAHO		18,830
FAMILY HOUSING		(6,593)
ILLINOIS		
NAVY		
GREAT LAKES PUBLIC WORKS CENTER NAVY		
SANITARY SEWER SYSTEM UPGRADE	13,000	
GREAT LAKES PUBLIC WORKS CENTER NAVY		13,000
AIR FORCE		
SCOTT AFB		
UNDERGROUND FUEL STORAGE TANKS	2,700	
SCOTT AFB		2,700
FAMILY HOUSING		
AIR FORCE		
SCOTT AFB		
CARDINAL CREEK PHASE III	(30,000)	
SCOTT AFB		
FAMILY HOUSING		(30,000)

**ILLINOIS		15,700
FAMILY HOUSING		(30,000)

FY 1995 MILITARY CONSTRUCTION TOTAL OBLIGATIONAL AUTHORITY AS ENACTED

ACTIVE, GUARD AND RESERVE FORCES INSIDE THE UNITED STATES ($ THOUSANDS)

DATA AS OF FEB 1995

STATE/COMP./INSTALLATION ----------PROJECT NAME----------	PROJ COST	TOTAL
INDIANA		
NAVY		
CRANE NAVAL SURFACE WARFARE CENTER DIV		
ELECTRO-OPTICS CENTER	7,970	
CRANE NAVAL SURFACE WARFARE CENTER DIV		7,970
ARMY NATIONAL GUARD		
CAMP ATTERBURY		
TNG SITE, AMMO STORAGE POINT	7,340	
CAMP ATTERBURY		7,340
STOUT FIELD (INIDIANAPOLIS)		
USPFO WAREHOUSE	4,137	
STOUT FIELD (INIDIANAPOLIS)		4,137
**ARMY NATIONAL GUARD		11,477
AIR NATIONAL GUARD		
HULMAN FIELD		
COMP SUPPORT FACILITY	3,200	
HULMAN FIELD		3,200
FT WAYNE MAP		
AIRCRAFT DEICING APRON	400	
FIRE STATION AND AGE SHOP	1,950	
FUEL SYSTEMS MAINTENANCE & CORROSION FAC	5,200	
FT WAYNE MAP		7,550
**AIR NATIONAL GUARD		10,750
AIR FORCE RESERVE		
GRISSOM AFB		
CANTONMENT AREA ENV COMPLIANCE	2,200	
GRISSOM AFB		2,200
**INDIANA		32,397
IOWA		
ARMY NATIONAL GUARD		
CAMP DODGE		
OMSS	877	
TNG SITE, BN COMPLEX PHIII	4,678	
CAMP DODGE		5,555
AIR NATIONAL GUARD		
DES MOINES MAP		
FIRE SUPPRESSION SYSTEM	2,300	
MUNITIONS MAINTENANCE FACILITY	3,900	
DES MOINES MAP		6,200
**IOWA		11,755
KANSAS		
AIR FORCE		
MCCONNELL AFB		
STORM DRAINAGE FACILITIES	500	
MCCONNELL AFB		500
ARMY NATIONAL GUARD		
NICKELL BARRACKS		
TNG SITE, BARRACKS PHII	4,260	
NICKELL BARRACKS		4,260
FORT RILEY		
MATES ADD/ALT	1,700	
FORT RILEY		1,700
**ARMY NATIONAL GUARD		5,960

FY 1995 MILITARY CONSTRUCTION TOTAL OBLIGATIONAL AUTHORITY AS ENACTED

ACTIVE, GUARD AND RESERVE FORCES
INSIDE THE UNITED STATES
($ THOUSANDS)

DATA AS OF FEB 1995

STATE/COMP./INSTALLATION ----------PROJECT NAME----------	PROJ COST	TOTAL
KANSAS		
AIR NATIONAL GUARD		
FORBES FIELD		
SITE RESTORATION & FUEL STRG TANK REMOVAL	2,950	
UPGRADE RUNWAY	4,800	
UPGRADE SANITARY SEWER SYS	670	
FORBES FIELD		8,420
FAMILY HOUSING		
ARMY		
FORT LEAVENWORTH		
REPLACEMENT CONSTRUCTION (126)	(12,600)	
FORT LEAVENWORTH		
FAMILY HOUSING		(12,600)
AIR FORCE		
MCCONNELL AFB		
FAMILY HOUSING (70 UNITS)	(8,322)	
MCCONNELL AFB		
FAMILY HOUSING		(8,322)

**KANSAS		14,880
FAMILY HOUSING		(20,922)
KENTUCKY		
ARMY		
FORT CAMPBELL		
EDUCATION CENTER (PHASE 1)	8,100	
RAILROAD TRACK	14,400	
TACTICAL EQUIPMENT SHOP	8,000	
WHOLE BARRACKS RENEWAL	22,000	
FORT CAMPBELL		52,500
FORT KNOX		
MULTIPURPOSE TRAINING RANGE	5,300	
VIRTUAL BRIGADE SIMULATOR BUILDING	3,200	
FORT KNOX		8,500

**ARMY		61,000
ARMY NATIONAL GUARD		
WEST KY REGION TRAIN CENTER		
TNG SITE, COMPLEX PHI	6,500	
WEST KY REGION TRAIN CENTER		6,500
AIR NATIONAL GUARD		
STANDIFORD FIELD		
FUEL CELL AND CORROSION CONTROL DOCK	2,950	
STANDIFORD FIELD		2,950

**KENTUCKY		70,450
LOUISIANA		
AIR FORCE		
BARKSDALE AFB		
ADAL APRONS/HYDRANS FUEL, PH 3	8,200	
MUNITIONS STORAGE FACILITIES	6,000	
STORM DRAINAGE FACILITIES	1,500	
BARKSDALE AFB		15,700
ARMY NATIONAL GUARD		
RUSTON		
ARMORY REHAB	2,745	
RUSTON		2,745

FY 1995 MILITARY CONSTRUCTION TOTAL OBLIGATIONAL AUTHORITY AS ENACTED

ACTIVE, GUARD AND RESERVE FORCES INSIDE THE UNITED STATES ($ THOUSANDS) — DATA AS OF FEB 1995

STATE/COMP./INSTALLATION ----------PROJECT NAME----------	PROJ COST	TOTAL
LOUISIANA		
AIR NATIONAL GUARD		
NEW ORLEANS NAS		
ADD TO AND ALTER MAINTENANCE	5,100	
NEW ORLEANS NAS		5,100
NAVY RESERVE		
NAVAL AIR STATION NEW ORLEANS		
ARMING PAD	840	
NAVAL AIR STATION NEW ORLEANS		840
AIR FORCE RESERVE		
BARKSDALE AFB		
ADD ALTER FACILITIES FOR CONVERSION	5,000	
BARKSDALE AFB		5,000
FAMILY HOUSING		
AIR FORCE		
BARKSDALE AFB		
FAMILY HOUSING (82 UNITS)	(8,236)	
BARKSDALE AFB		
FAMILY HOUSING		(8,236)
**LOUISIANA		29,385
FAMILY HOUSING		(8,236)
MAINE		
ARMY NATIONAL GUARD		
AUGUSTA		
ARMORY ADD/REHAB/ANNEX	3,900	
AUGUSTA		3,900
AIR NATIONAL GUARD		
BANGOR IAP		
COMPOSITE SQUADRON OPERATIONS	8,800	
REFUELING VEHICLE MAINTENANCE FACILITY	379	
REPLACE UNDERGROUND FUEL STORAGE TANKS	840	
BANGOR IAP		10,019
**MAINE		13,919
MARYLAND		
ARMY		
ABERDEEN PROVING GROUND		
ELECTRICAL DISTRIBUTION FACILITY	2,600	
ABERDEEN PROVING GROUND		2,600
ADELPHI LAB CENTER		
COMPUTER CENTER	6,600	
ADELPHI LAB CENTER		6,600
**ARMY		9,200
NAVY		
ANNAPOLIS NAVAL ACADEMY		
FIRE STATION	1,900	
ANNAPOLIS NAVAL ACADEMY		1,900
INDIAN HEAD NAVAL SURFACE WARFARE CTR DIV		
DENITRATION AND ACID MIX FACILITY	6,400	
POWER PLANT UPGRADES	4,000	
INDIAN HEAD NAVAL SURFACE WARFARE CTR DIV		10,400
PATUXENT RIVER NAVAL AIR STATION		
ADVANCED SYS INTEGRATION FAC (PHASE III)	10,000	

FY 1995 MILITARY CONSTRUCTION TOTAL OBLIGATIONAL AUTHORITY AS ENACTED

ACTIVE, GUARD AND RESERVE FORCES
INSIDE THE UNITED STATES
($ THOUSANDS)

DATA AS OF FEB 1995

STATE/COMP./INSTALLATION ----------PROJECT NAME----------	PROJ COST	TOTAL
MARYLAND		
NAVY		
PATUXENT RIVER NAVAL AIR STATION		
AIR INTEROPERABILITY CENTER	4,200	
PATUXENT RIVER NAVAL AIR STATION		14,200
**NAVY		26,500
AIR FORCE		
ANDREWS AFB		
DORMITORY	6,300	
ANDREWS AFB		6,300
NATIONAL SECURITY AGENCY		
FORT MEADE		
CRITICAL SUBSTATION CONTROL	5,458	
SUPERCOMPUTER FACILITY	12,720	
FORT MEADE		18,178
ARMY NATIONAL GUARD		
BALTIMORE		
ARMORY	4,558	
BALTIMORE		4,558
FAMILY HOUSING		
NAVY		
NAVAL AIR TEST CENTER PATUXENT RIVER		
NEW CONSTRUCTION (HSG OFFICE)	(863)	
NAVAL AIR TEST CENTER PATUXENT RIVER		
FAMILY HOUSING		(863)
**MARYLAND		64,736
FAMILY HOUSING		(863)
MASSACHUSETTS		
ARMY NATIONAL GUARD		
TAUNTON		
ARMORY	2,900	
TAUNTON		2,900
WESTFIELD		
OMS ADD/ALT	1,200	
WESTFIELD		1,200
**ARMY NATIONAL GUARD		4,100
AIR FORCE RESERVE		
WESTOVER AFB		
REPLACE TAXIWAY "G"	5,100	
REPLACE UNDERGROUND STORAGE TANKS	1,000	
WESTOVER AFB		6,100
FAMILY HOUSING		
ARMY		
NATICK RESEARCH CENTER		
REPLACEMENT CONSTRUCTION (35)	(4,150)	
NATICK RESEARCH CENTER		
FAMILY HOUSING		(4,150)
**MASSACHUSETTS		10,200
FAMILY HOUSING		(4,150)
MICHIGAN		
ARMY NATIONAL GUARD		
AUGUSTA		
RANGE, COMBAT PISTOL QUAL CRSE	400	

FY 1995 MILITARY CONSTRUCTION TOTAL OBLIGATIONAL AUTHORITY AS ENACTED

ACTIVE, GUARD AND RESERVE FORCES DATA AS OF FEB 1995
INSIDE THE UNITED STATES
($ THOUSANDS)

STATE/COMP./INSTALLATION -----PROJECT NAME-----	PROJ COST	TOTAL
MICHIGAN		
ARMY NATIONAL GUARD		
AUGUSTA		
RANGE, MOD RECORD FIRE	900	
AUGUSTA		1,300
CALUMET		
ARMORY RENOVATION	120	
CALUMET		120
**ARMY NATIONAL GUARD		1,420
AIR NATIONAL GUARD		
ALPENA COUNTY REGIONAL AIRPORT		
FIREMEN TRAINING FACILITY	750	
REPLACE UNDERGROUND FUEL STORAGE TANKS	385	
ALPENA COUNTY REGIONAL AIRPORT		1,135
SELFRIDGE ANGB		
UPGRADE ACCESS ROADS AND MAIN	2,045	
UPGRADE HEATING SYSTEM	5,400	
UPGRADE SANITARY SEWER SYSTEM	610	
UPGRADE STORM DRAINAGE SYSTEM	840	
SELFRIDGE ANGB		8,895
WK KELLOGG REGIONAL AIRPORT		
FIRE STATION & AIRCRAFT GROUND EQUIP SHOP	1,600	
WK KELLOGG REGIONAL AIRPORT		1,600
**AIR NATIONAL GUARD		11,630
**MICHIGAN		13,050
MINNESOTA		
AIR NATIONAL GUARD		
MINN-ST PAUL IAP		
SQUADRON OPERATIONS/AEROMEDICAL EVAC	8,000	
MINN-ST PAUL IAP		8,000
MISSISSIPPI		
AIR FORCE		
COLUMBUS AFB		
ENLISTED DORMITORY	10,000	
T-1 SPECIALIZED UPT MAINT SUPPORT	3,200	
COLUMBUS AFB		13,200
KEESLER AFB		
UPGRADE FIRE SUPPRESSION SYSTEM	640	
7-LEVEL TRAINING CLASSROOMS	1,800	
7-LEVEL TRAINING DORMITORY	8,800	
KEESLER AFB		11,240
**AIR FORCE		24,440
ARMY NATIONAL GUARD		
CRYSTAL SPRINGS		
ARMORY	2,250	
CRYSTAL SPRINGS		2,250
WINONA		
ARMORY	1,650	
WINONA		1,650
**ARMY NATIONAL GUARD		3,900

FY 1995 MILITARY CONSTRUCTION TOTAL OBLIGATIONAL AUTHORITY AS ENACTED

ACTIVE, GUARD AND RESERVE FORCES INSIDE THE UNITED STATES ($ THOUSANDS) — DATA AS OF FEB 1995

STATE/COMP./INSTALLATION ----------PROJECT NAME----------	PROJ COST	TOTAL
MISSISSIPPI		
AIR NATIONAL GUARD		
ALLEN C THOMPSON FIELD		
FIRE STATION	1,750	
ALLEN C THOMPSON FIELD		1,750
GULFPORT		
OPERATIONS AND ACMI SUPPORT	2,250	
TROOP TRAINING QUARTERS	5,300	
GULFPORT		7,550
**AIR NATIONAL GUARD		9,300
FAMILY HOUSING		
NAVY		
NCBC GULFPORT MS		
120 UNITS NEW CONSTRUCTION	(10,370)	
NCBC GULFPORT MS		
FAMILY HOUSING		(10,370)
**MISSISSIPPI		37,640
FAMILY HOUSING		(10,370)
MISSOURI		
AIR FORCE		
WHITEMAN AFB		
B-2 ADAL APRON, TAXIWAY, & CONVOY ROADS	4,600	
B-2 ADAL DOCK & HANGAR FIRE PROTECTION SYS	3,400	
B-2 AIRCRAFT MAINT DOCKS/HYDRANT FUELING	15,000	
STORM DRAINAGE FACILITIES	1,290	
WHITEMAN AFB		24,290
ARMY NATIONAL GUARD		
COLUMBIA		
ARMORY	1,415	
COLUMBIA		1,415
JEFFERSON CITY		
TNG SITE, ACCESS ROAD	1,396	
JEFFERSON CITY		1,396
**ARMY NATIONAL GUARD		2,811
AIR NATIONAL GUARD		
JEFFERSON BARRACKS ANG SITE		
REPLACE FUEL TANKS/UPGRADE REFUEL BOOTH	500	
JEFFERSON BARRACKS ANG SITE		500
ROSECRANS MEMORIAL AIRPORT		
BASE CIVIL ENGINEERING	3,000	
REPLACE AATTC CLASSROOM	2,150	
ROSECRANS MEMORIAL AIRPORT		5,150
ST LOUIS-LAMBERT FIELD		
REPLACE UNDERGROUND FUEL STORAGE TANKS	440	
ST LOUIS-LAMBERT FIELD		440
**AIR NATIONAL GUARD		6,090
FAMILY HOUSING		
AIR FORCE		
WHITEMAN AFB		
HOUSING OFFICE	(567)	
WHITEMAN AFB		
FAMILY HOUSING		(567)
**MISSOURI		33,191
FAMILY HOUSING		(567)

FY 1995 MILITARY CONSTRUCTION TOTAL OBLIGATIONAL AUTHORITY AS ENACTED

ACTIVE, GUARD AND RESERVE FORCES INSIDE THE UNITED STATES ($ THOUSANDS)

DATA AS OF FEB 1995

STATE/COMP./INSTALLATION ----------PROJECT NAME----------	PROJ COST	TOTAL
MONTANA		
AIR FORCE		
MALMSTROM AFB		
UNDERGROUND FUEL STORAGE TANKS	3,200	
UNGD FUEL STORAGE TANKS MINUTEMAN III FACS	4,000	
MALMSTROM AFB		7,200
AIR NATIONAL GUARD		
GREAT FALLS IAP		
ADAL FUEL CELL AND CORROSION CONTROL HANG	1,150	
MUNITIONS MAINTENANCE/STORA	3,150	
GREAT FALLS IAP		4,300
**MONTANA		11,500
NEBRASKA		
AIR FORCE		
OFFUTT AFB		
STORM DRAINAGE FACILITIES	1,500	
UNDERGROUND FUEL STORAGE TANKS	760	
OFFUTT AFB		2,260
AIR NATIONAL GUARD		
LINCOLN MAP		
PARKING APRON AND HYDRANT REFUELING SYS	14,274	
REPLACE UNDERGROUND FUEL STORAGE TANKS	500	
LINCOLN MAP		14,774
**NEBRASKA		17,034
NEVADA		
AIR FORCE		
NELLIS AFB		
RELOCATE WATER STORAGE	600	
NELLIS AFB		600
ARMY NATIONAL GUARD		
STEAD		
ARMORY	5,520	
STEAD		5,520
ARMY RESERVE		
LAS VEGAS		
AFRC/OMS PHASE I	10,000	
LAS VEGAS		10,000
**NEVADA		16,120
NEW JERSEY		
ARMY		
MIL OCEAN TERM BAYONNE		
PAVE CARGO STAGING AND HOLDING AREA	4,050	
MIL OCEAN TERM BAYONNE		4,050
NAVY		
LAKEHURST NAVAIRWARFARE CTR AIRCRAFT DIV		
POTABLE WATER DISTRIBUTION SYSTEM ADDN	2,950	
LAKEHURST NAVAIRWARFARE CTR AIRCRAFT DIV		2,950
AIR FORCE		
MCGUIRE AFB		
DORMITORY	8,700	
DORMITORY	1,600	

FY 1995 MILITARY CONSTRUCTION TOTAL OBLIGATIONAL AUTHORITY AS ENACTED

ACTIVE, GUARD AND RESERVE FORCES DATA AS OF FEB 1995
INSIDE THE UNITED STATES
($ THOUSANDS)

STATE/COMP./INSTALLATION ----------PROJECT NAME----------	PROJ COST	TOTAL
NEW JERSEY		
AIR FORCE		
MCGUIRE AFB		
UPGRADE SANITARY SEWER SYSTEM	4,800	
UPGRADE STORM DRAINAGE FACILITIES	1,900	
MCGUIRE AFB		17,000
DEFENSE MEDICAL SUPPORT ACTIVITY		
FORT DIX		
HOSPITAL LIFE SAFETY UPGRADE	2,000	
FORT DIX		2,000
AIR NATIONAL GUARD		
MCGUIRE AFB		
CONSOLIDATED AIRCRAFT PARKING APRON	9,600	
REPLACE UNDERGROUND FUEL STORAGE TANKS	1,000	
MCGUIRE AFB		10,600
**NEW JERSEY		36,600
NEW MEXICO		
NAVY		
WHITE SANDS NAVAL ORD MISSILE TEST STA		
WEAPONS TEST RANGE	1,390	
WHITE SANDS NAVAL ORD MISSILE TEST STA		1,390
AIR FORCE		
HOLLOMAN AFB		
DORMITORY	3,950	
F-117A HANGAR	7,000	
HOLLOMAN AFB		10,950
KIRTLAND AFB		
ADAL BASE WATER SYSTEM	8,800	
ALTER BASE SUPPORT FACILITIES	9,500	
CHILD DEVELOPMENT CENTER	3,500	
UNDERGROUND FUEL STORAGE TANKS	3,200	
UPGRADE ELECTRICAL DISTRIBUTION SYSTEM	3,000	
KIRTLAND AFB		28,000
**AIR FORCE		38,950
SPECIAL OPERATIONS COMMAND		
KIRTLAND AIR FORCE BASE		
AIRCREW TRAINING FACILITY	9,600	
KIRTLAND AIR FORCE BASE		9,600
AIR NATIONAL GUARD		
KIRTLAND AFB		
REPLACE UNDERGROUND FUEL STORAGE TANKS	900	
KIRTLAND AFB		900
FAMILY HOUSING		
AIR FORCE		
CANNON AFB		
FAMILY HOUSING (1 UNIT)	(230)	
CANNON AFB		
FAMILY HOUSING		(230)
HOLLOMAN AFB		
FAMILY HOUSING (76 UNITS)	(7,733)	
HOLLOMAN AFB		
FAMILY HOUSING		(7,733)
KIRTLAND AFB		
FAMILY HOUSING (106 UNITS)	(10,058)	
KIRTLAND AFB		
FAMILY HOUSING		(10,058)
**AIR FORCE		
FAMILY HOUSING		(18,021)
**NEW MEXICO		50,840
FAMILY HOUSING		(18,021)

FY 1995 MILITARY CONSTRUCTION TOTAL OBLIGATIONAL AUTHORITY AS ENACTED

ACTIVE, GUARD AND RESERVE FORCES
INSIDE THE UNITED STATES
($ THOUSANDS)

DATA AS OF FEB 1995

STATE/COMP./INSTALLATION -----PROJECT NAME-----	PROJ COST	TOTAL
NEW YORK		
ARMY		
FORT DRUM		
MULTI-PURPOSE RANGE COMPLEX	12,600	
FORT DRUM		12,600
U S MILITARY ACADEMY		
RENOVATE FOOD PROCESSING FACILITY	28,000	
U S MILITARY ACADEMY		28,000
**ARMY		40,600
ARMY NATIONAL GUARD		
CAMP SMITH		
TNG SITE, WATER/WASTE SYS REHAB	1,820	
CAMP SMITH		1,820
AIR NATIONAL GUARD		
HANCOCK FIELD		
REPLACE UNDERGROUND FUEL STORAGE TANKS	580	
HANCOCK FIELD		580
NIAGARA FALLS INTERNATIONAL AIRPORT		
REPLACE UNDERGROUND FUEL STORAGE TANKS	640	
NIAGARA FALLS INTERNATIONAL AIRPORT		640
SCHENECTADY AIRPORT ANG		
FIRE STATION, AGE, SECURITY & MEDICAL	3,200	
SCHENECTADY AIRPORT ANG		3,200
**AIR NATIONAL GUARD		4,420
FAMILY HOUSING		
ARMY		
U S MILITARY ACADEMY		
REPLACEMENT CONSTRUCTION (56)	(8,000)	
U S MILITARY ACADEMY FAMILY HOUSING		(8,000)
**NEW YORK		46,840
FAMILY HOUSING		(8,000)
NORTH CAROLINA		
ARMY		
FORT BRAGG		
WHOLE BARRACKS RENEWAL	29,000	
FORT BRAGG		29,000
SUNNY POINT ARMY TERM		
DREDGE TERMINAL ENTRANCE	16,500	
HOLDING PAD	5,700	
SUNNY POINT ARMY TERM		22,200
**ARMY		51,200
NAVY		
CAMP LEJEUNE MARINE CORPS BASE		
MULTI-PURPOSE TRAINING RANGE COMPLEX	10,400	
OIL SPILL PREVENTION	4,450	
CAMP LEJEUNE MARINE CORPS BASE		14,850
CHERRY POINT MARINE CORPS AIR STATION		
CYROGENICS FACILITY	2,100	
CHERRY POINT MARINE CORPS AIR STATION		2,100
**NAVY		16,950

FY 1995 MILITARY CONSTRUCTION TOTAL OBLIGATIONAL AUTHORITY AS ENACTED

ACTIVE, GUARD AND RESERVE FORCES INSIDE THE UNITED STATES ($ THOUSANDS) — DATA AS OF FEB 1995

STATE/COMP./INSTALLATION ----------PROJECT NAME----------	PROJ COST	TOTAL
NORTH CAROLINA		
AIR FORCE		
POPE AFB		
AIRCRAFT PARKING APRON LIGHTING	1,500	
*BRIDGE, ROAD, AND UTILITIES	4,000	
COMBAT CONTROL TEAM FACILITY	2,450	
FIRE TRAINING FACILITY	1,100	
POPE AFB		9,050
AUTHORIZED FOR APPROPRIATION IN PRIOR YEAR		(4,000)
SPECIAL OPERATIONS COMMAND		
FORT BRAGG		
4 POG CO, POS	8,000	
FORT BRAGG		8,000
DEFENSE MEDICAL SUPPORT ACTIVITY		
FORT BRAGG		
#HOSPITAL REPLACEMENT PHASE III	75,000	
FORT BRAGG		75,000
AUTHORIZED IN PRIOR YEAR		(75,000)
ARMY NATIONAL GUARD		
KINSTON		
ARMORY	3,519	
KINSTON		3,519
AIR NATIONAL GUARD		
DOUGLAS MAP		
REPLACE UNDERGROUND FUEL STORAGE TANKS	690	
DOUGLAS MAP		690
STANLY COUNTY AIRPORT		
COMPOSITE DEPLOYMENT FACILITY	5,100	
STANLY COUNTY AIRPORT		5,100
**AIR NATIONAL GUARD		5,790
AIR FORCE RESERVE		
KINSTON REGIONAL AIRPORT		
HOLDING APRON & RUNWAY IMPROVEMENTS	4,808	
KINSTON REGIONAL AIRPORT		4,808
FAMILY HOUSING		
AIR FORCE		
POPE AFB		
FAMILY HOUSING (120 UNITS)	(14,874)	
POPE AFB		
FAMILY HOUSING		(14,874)
SEYMOUR JOHNSON AFB		
FAMILY HOUSING (74 UNITS)	(6,025)	
SEYMOUR JOHNSON AFB		
FAMILY HOUSING		(6,025)
**AIR FORCE		
FAMILY HOUSING		(20,899)
**NORTH CAROLINA		174,317
AUTHORIZED IN PRIOR YEAR		(79,000)
FAMILY HOUSING		(20,899)
NORTH DAKOTA		
AIR FORCE		
GRAND FORKS AFB		
UNGD FUEL STORAGE TANKS - MISSILE FACS	5,200	
GRAND FORKS AFB		5,200

AUTHORIZED IN PRIOR YEAR

FY 1995 MILITARY CONSTRUCTION TOTAL OBLIGATIONAL AUTHORITY AS ENACTED

ACTIVE, GUARD AND RESERVE FORCES INSIDE THE UNITED STATES ($ THOUSANDS)

DATA AS OF FEB 1995

STATE/COMP./INSTALLATION -----PROJECT NAME-----	PROJ COST	TOTAL
NORTH DAKOTA		
AIR FORCE		
MINOT AFB		
STORM DRAINAGE FACILITIES	1,500	
UNDERGROUND FUEL STORAGE TANKS	1,400	
UNGD FUEL STORAGE TANKS - MISSILE FACS	2,950	
MINOT AFB		5,850
**AIR FORCE		11,050
FAMILY HOUSING		
AIR FORCE		
GRAND FORKS AFB		
HOUSING OFFICE	(709)	
GRAND FORKS AFB FAMILY HOUSING		(709)
**NORTH DAKOTA		11,050
FAMILY HOUSING		(709)
OHIO		
AIR FORCE		
WRIGHT-PATTERSON AFB		
ACQUISITION MANAGEMENT COMPLEX	18,300	
SPECIAL OPERATIONS INTELLIGENCE FACILITY	4,900	
UPGRADE STORM DRAINAGE SYSTEM	3,350	
WRIGHT-PATTERSON AFB		26,550
DEFENSE LOGISTICS AGENCY		
DEFENSE CONSTRUCTION SUPPLY CENTER		
FIRE STATION	2,200	
DEFENSE CONSTRUCTION SUPPLY CENTER		2,200
ARMY NATIONAL GUARD		
RAVENNA		
TNG SITE SUPPORT FAC/ARMORY	4,500	
RAVENNA		4,500
AIR NATIONAL GUARD		
MANSFIELD LAHM AIRPORT		
REPLACE UNDERGROUND FUEL STORAGE TANKS	770	
MANSFIELD LAHM AIRPORT		770
SPRINGFIELD MAP		
ADAL FUEL CELL AND CORROSION CONTROL DOCK	1,250	
MEDICAL TRAINING AND DINING FAC	4,300	
REPLACE UNDERGROUND FUEL STORAGE TANKS	400	
SPRINGFIELD MAP		5,950
TOLEDO EXPRESS AIRPORT		
AIRCRAFT DEICING APRON	320	
BASE CIVIL ENGINEER	2,540	
TOLEDO EXPRESS AIRPORT		2,860
**AIR NATIONAL GUARD		9,580
AIR FORCE RESERVE		
YOUNGSTOWN MAP		
INDUSTRIAL WASTEWATER PRETREATMENT FAC	500	
YOUNGSTOWN MAP		500
**OHIO		43,330
OKLAHOMA		
ARMY		
FORT SILL		
WHOLE BARRACKS RENEWAL	18,000	
FORT SILL		18,000

FY 1995 MILITARY CONSTRUCTION TOTAL OBLIGATIONAL AUTHORITY AS ENACTED

ACTIVE, GUARD AND RESERVE FORCES INSIDE THE UNITED STATES ($ THOUSANDS) — DATA AS OF FEB 1995

STATE/COMP./INSTALLATION ----------PROJECT NAME----------	PROJ COST	TOTAL
OKLAHOMA		
AIR FORCE		
ALTUS AFB		
ADD TO AND ALTER DORMITORY	3,750	
ALTUS AFB		3,750
TINKER AFB		
CORROSION CONTROL FACILITY (DBOF)	8,400	
EXTEND/UPGRADE ALTERNATE RUNWAY	10,800	
STORM DRAINAGE SYSTEM	1,243	
TINKER AFB		20,443
VANCE AFB		
ALTER DORMITORIES	2,300	
FIRE TRAINING FACILITY	980	
UPGRADE AIRCRAFT PARKING CENTER	5,500	
UPGRADE SANITARY SEWER SYSTEM	1,100	
UPGRADE STORM DRAINAGE SYSTEM	1,800	
VANCE AFB		11,680
**AIR FORCE		35,873
ARMY NATIONAL GUARD		
OKLAHOMA CITY		
TNG SITE, BARRACKS/CLASSROOM	4,463	
OKLAHOMA CITY		4,463
AIR NATIONAL GUARD		
TULSA IAP		
REPLACE UNDERGROUND FUEL STORAGE TANKS	700	
TULSA IAP		700
AIR FORCE RESERVE		
TINKER AFB		
UPGRADE RAMP HYDRANT FUELING SYSTEM	10,200	
TINKER AFB		10,200
**OKLAHOMA		69,236
OREGON		
ARMY NATIONAL GUARD		
PENDELTON		
AVN SUPPORT FACILITY	2,000	
PENDELTON		2,000
UMATILLA ARMY DEPOT		
ARMORY	1,713	
UMATILLA ARMY DEPOT		1,713
**ARMY NATIONAL GUARD		3,713
AIR NATIONAL GUARD		
CAMP RILEA ANG COMMUNICATIONS SITE		
COMM ELECTRONICS TRAINING COMPLEX	4,650	
CAMP RILEA ANG COMMUNICATIONS SITE		4,650
PORTLAND IAP		
SITE RESTORATION	1,700	
PORTLAND IAP		1,700
**AIR NATIONAL GUARD		6,350
**OREGON		10,063
PENNSYLVANIA		
ARMY		
TOBYHANNA ARMY DEPOT		
INDUSTRIAL OPERATIONS FACILITY	17,000	
TOBYHANNA ARMY DEPOT		17,000

FY 1995 MILITARY CONSTRUCTION TOTAL OBLIGATIONAL AUTHORITY AS ENACTED

ACTIVE, GUARD AND RESERVE FORCES INSIDE THE UNITED STATES ($ THOUSANDS) — DATA AS OF FEB 1995

STATE/COMP./INSTALLATION ----------PROJECT NAME----------	PROJ COST	TOTAL
PENNSYLVANIA		
NAVY		
PHILADELPHIA NAVAL SHIPYARD		
FOUNDRY RENOVATION	4,500	
PIER RENOVATION	6,000	
UTILITIES RECONFIGURATION	14,200	
PHILADELPHIA NAVAL SHIPYARD		24,700
ARMY NATIONAL GUARD		
ARMSTRONG COUNTY (FORD CITY)		
ARMORY	1,982	
ARMSTRONG COUNTY (FORD CITY)		1,982
FORT INDIANTOWN GAP		
RANGE, (RETS)	770	
TNG SITE, BARRACKS	6,200	
TNG STE, FLT SIM/AERO-MED CPLX	4,584	
FORT INDIANTOWN GAP		11,554
WESTMORELAND CNTY/MT PLEASANT		
ARMORY	3,594	
WESTMORELAND CNTY/MT PLEASANT		3,594
**ARMY NATIONAL GUARD		17,130
AIR NATIONAL GUARD		
GREATER PITTSBURGH INTERNATIONAL AIRPORT		
REPLACE UNDERGROUND FUEL STORAGE TANKS	500	
GREATER PITTSBURGH INTERNATIONAL AIRPORT		500
HARRISBURG IAP		
REPLACE UNDERGROUND FUEL STORAGE TANKS	690	
HARRISBURG IAP		690
FT INDIANTOWN ANG COMMUNICATIONS SITE		
REPLACE UNDERGROUND FUEL STORAGE TANKS	1,800	
FT INDIANTOWN ANG COMMUNICATIONS SITE		1,800
WILLOW GROVE NAS		
REPLACE UNDERGROUND FUEL STORAGE TANKS	470	
WILLOW GROVE NAS		470
**AIR NATIONAL GUARD		3,460
NAVY RESERVE		
NAVMARCORESCEN FOLSOM		
TRAINING CENTER RENOVATION	2,300	
NAVMARCORESCEN FOLSOM		2,300
**PENNSYLVANIA		64,590
RHODE ISLAND		
NAVY		
NEWPORT NAVAL EDUCATION & TRAINING CENTER		
SANITARY SEWER SYSTEM UPGRADES	14,500	
NEWPORT NAVAL EDUCATION & TRAINING CENTER		14,500
NEWPORT NAVAL WAR COLLEGE		
STRATEGIC MARITIME RESEARCH CENTER	10,000	
NEWPORT NAVAL WAR COLLEGE		10,000
**NAVY		24,500
SOUTH CAROLINA		
ARMY		
CHARLESTON NAVAL WEAPONS STATION		
ARMY STRATEGIC MAINTENANCE COMPLEX, PH I	20,000	
CHARLESTON NAVAL WEAPONS STATION		20,000

FY 1995 MILITARY CONSTRUCTION TOTAL OBLIGATIONAL AUTHORITY AS ENACTED

ACTIVE, GUARD AND RESERVE FORCES INSIDE THE UNITED STATES ($ THOUSANDS)

DATA AS OF FEB 1995

STATE/COMP./INSTALLATION ----------PROJECT NAME----------	PROJ COST	TOTAL
SOUTH CAROLINA		
NAVY		
BEAUFORT MARINE CORPS AIR STATION		
SUPPORT FACILITIES RENOVATION	10,800	
BEAUFORT MARINE CORPS AIR STATION		10,800
PARRIS ISLAND MARINE CORPS RECRUIT DEPOT		
CHILD DEVELOPMENT CENTER	2,550	
RECRUIT TRAINING FACILITY	5,800	
PARRIS ISLAND MARINE CORPS RECRUIT DEPOT		8,350
**NAVY		19,150
AIR FORCE		
CHARLESTON AFB		
ALTER DORMITORIES	9,900	
UPGRADE HAZARDOUS WASTE STORAGE FACILITY	1,500	
CHARLESTON AFB		11,400
ARMY NATIONAL GUARD		
EASTOVER		
TNG SITE, CLASS IX ACT	2,300	
EASTOVER		2,300
ARMY RESERVE		
NORTH CHARLESTON		
USARC/OMS/AMSA	8,560	
NORTH CHARLESTON		8,560
FAMILY HOUSING		
AIR FORCE		
SHAW AFB		
FAMILY HOUSING (3 UNITS)	{631}	
SHAW AFB		
FAMILY HOUSING		{631}
**SOUTH CAROLINA		61,410
FAMILY HOUSING		{631}
SOUTH DAKOTA		
AIR FORCE		
ELLSWORTH AFB		
CONSOLIDATED ADMIN SPT CTR, PH 2	4,500	
STORM DRAINAGE FACILITIES	1,450	
ELLSWORTH AFB		5,950
AIR NATIONAL GUARD		
JOE FOSS FIELD		
POWER CHECK PAD	2,500	
JOE FOSS FIELD		2,500
**SOUTH DAKOTA		8,450
TENNESSEE		
AIR FORCE		
ARNOLD ENGINEERING DEV CENTER		
HAZARDOUS WASTE/MATERIAL STORAGE FACILITY	1,900	
ARNOLD ENGINEERING DEV CENTER		1,900
ARMY NATIONAL GUARD		
CATOOSA		
ARMORY ADD/REHAB	1,604	
CATOOSA		1,604

FY 1995 MILITARY CONSTRUCTION TOTAL OBLIGATIONAL AUTHORITY AS ENACTED

ACTIVE, GUARD AND RESERVE FORCES DATA AS OF FEB 1995
INSIDE THE UNITED STATES
($ THOUSANDS)

STATE/COMP./INSTALLATION ----------PROJECT NAME----------	PROJ COST	TOTAL
TENNESSEE		
ARMY NATIONAL GUARD		
DUNLAP		
OMSS	715	
DUNLAP		715
JOHNSON CITY		
AFRC ADD/ALT	6,019	
ARMORY	1,742	
JOHNSON CITY		7,761
LINDEN		
ARMORY	1,097	
LINDEN		1,097
MILAN		
UTES	825	
MILAN		825
ONEIDA		
ARMORY	1,230	
ONEIDA		1,230
ROGERSVILLE		
ARMORY	1,820	
ROGERSVILLE		1,820
SPRINGFIELD		
ARMORY	1,115	
SPRINGFIELD		1,115
TRENTON		
OMS	630	
TRENTON		630
WAVERLY		
ARMORY ADD/ALT PHII	321	
WAVERLY		321
**ARMY NATIONAL GUARD		17,118
AIR NATIONAL GUARD		
MEMPHIS IAP		
C-141 FLIGHT SIMULATOR	3,500	
VEHICLE MAINTENANCE/AGE	1,900	
MEMPHIS IAP		5,400
NASHVILLE MAP		
VEHICLE MAINTENANCE COMPLEX	2,250	
NASHVILLE MAP		2,250
**AIR NATIONAL GUARD		7,650
**TENNESSEE		26,668
TEXAS		
ARMY		
FORT BLISS		
ARMY SERGEANTS MAYOR ACADEMY	5,600	
TACTICAL EQUIPMENT SHOP	11,200	
FORT BLISS		16,800
FORT HOOD		
CONSOLIDATED MAINTENANCE FACILITY PHASE IV	8,800	
TACTICAL EQUIPMENT SHOP	8,000	

FY 1995 MILITARY CONSTRUCTION TOTAL OBLIGATIONAL AUTHORITY AS ENACTED

ACTIVE, GUARD AND RESERVE FORCES
INSIDE THE UNITED STATES
($ THOUSANDS)

DATA AS OF FEB 1995

STATE/COMP./INSTALLATION ----------PROJECT NAME----------	PROJ COST	TOTAL
TEXAS		
ARMY		
FORT HOOD		
WHOLE BARRACKS RENEWAL	29,000	
FORT HOOD		45,800
FORT SAM HOUSTON		
SEWAGE TREATMENT PLANT - CAMP BULLIS	4,300	
FORT SAM HOUSTON		4,300
**ARMY		66,900
NAVY		
INGLESIDE NAVAL STATION		
MAGNETIC SILENCING FAC W/LAND ACQUISITION	14,110	
INGLESIDE NAVAL STATION		14,110
KINGSVILLE NAVAL AIR STATION		
AIR OPERATIONS BUILDING ADDITION	1,530	
KINGSVILLE NAVAL AIR STATION		1,530
**NAVY		15,640
AIR FORCE		
BROOKS AFB		
DIRECTED ENERGY LABORTORY	6,500	
BROOKS AFB		6,500
KELLY AFB		
ADD TO AND ALTER DORMITORY	2,250	
UPGRADE HYDRANT FUELING SYSTEMS	3,700	
UPGRADE SANITARY SEWER LINES	3,000	
KELLY AFB		8,950
LACKLAND AFB		
ALTER RECRUIT DORMITORY	3,400	
7-LEVEL TRAINING CLASSROOMS	1,800	
LACKLAND AFB		5,200
SHEPPARD AFB		
7-LEVEL TRAINING CLASSROOMS	3,300	
SHEPPARD AFB		3,300
**AIR FORCE		23,950
ARMY NATIONAL GUARD		
MARSHALL		
OMS ADD/ALT	830	
MARSHALL		830
FORT WORTH		
ARMORY ADD/ALT	3,041	
FORT WORTH		3,041
WYLIE		
OMS	1,261	
WYLIE		1,261
**ARMY NATIONAL GUARD		5,132
FAMILY HOUSING		
ARMY		
FORT BLISS		
REPLACEMENT CONSTRUCTION (105)	(10,800)	
REPLACEMENT CONSTRUCTION (110)	(10,600)	
FORT BLISS		
FAMILY HOUSING		(21,400)

FY 1995 MILITARY CONSTRUCTION TOTAL OBLIGATIONAL AUTHORITY AS ENACTED

ACTIVE, GUARD AND RESERVE FORCES INSIDE THE UNITED STATES ($ THOUSANDS)

DATA AS OF FEB 1995

STATE/COMP./INSTALLATION ----------PROJECT NAME----------	PROJ COST	TOTAL
TEXAS		
ARMY		
FORT SAM HOUSTON		
REPLACEMENT CONSTRUCTION (100)	(10,000)	
FORT SAM HOUSTON		
FAMILY HOUSING		(10,000)

**ARMY		
FAMILY HOUSING		(31,400)
NAVY		
NAVAL COMPLEX CORPUS CHRISTI		
100 UNITS REPLACEMENT	(11,800)	
NAVAL COMPLEX CORPUS CHRISTI		
FAMILY HOUSING		(11,800)
AIR FORCE		
DYESS AFB		
FAMILY HOUSING (59 UNITS)	(7,077)	
DYESS AFB		
FAMILY HOUSING		(7,077)

**TEXAS		111,622
FAMILY HOUSING		(50,277)
UTAH		
ARMY NATIONAL GUARD		
CAMP WILLIAMS		
TNG SITE, TISA PHII	2,290	
CAMP WILLIAMS		2,290
AIR NATIONAL GUARD		
SALT LAKE CITY IAP		
AIRCRAFT WASHRACK AND DEICE FACILITY	400	
SALT LAKE CITY IAP		400
FAMILY HOUSING		
AIR FORCE		
HILL AFB		
FAMILY HOUSING (138 UNITS)	(11,400)	
HILL AFB		
FAMILY HOUSING		(11,400)

**UTAH		2,690
FAMILY HOUSING		(11,400)
VERMONT		
AIR NATIONAL GUARD		
BURLINGTON IAP		
DINING HALL, MEDICAL TRAINING FAC	4,800	
BURLINGTON IAP		4,800
VIRGINIA		
ARMY		
FORT LEE		
REPAIR ELECTRICAL DISTRIBUTION (PH1)	11,000	
SOLDIERS ONE STOP CENTER	4,600	
FORT LEE		15,600
FORT MYER		
WHOLE BARRACKS RENEWAL	7,300	
FORT MYER		7,300

**ARMY		22,900

FY 1995 MILITARY CONSTRUCTION TOTAL OBLIGATIONAL AUTHORITY AS ENACTED

ACTIVE, GUARD AND RESERVE FORCES INSIDE THE UNITED STATES ($ THOUSANDS) — DATA AS OF FEB 1995

STATE/COMP./INSTALLATION ----------PROJECT NAME----------	PROJ COST	TOTAL
VIRGINIA		
NAVY		
CHESAPEAKE NAVAL SECURITY GROUP ACT NW		
CHILD DEVELOPMENT CENTER	1,150	
CHESAPEAKE NAVAL SECURITY GROUP ACT NW		1,150
DAM NECK FLEET COMBAT TRAIN CTR ATLANTIC		
CHILD DEVELOPMENT CENTER	1,600	
LAND ACQUISITION	4,850	
WEAPONS TRAINING FACILITY	5,400	
DAM NECK FLEET COMBAT TRAIN CTR ATLANTIC		11,850
LITTLE CREEK NAVAL AMPHIBIOUS BASE		
FIRE STATION	5,000	
LITTLE CREEK NAVAL AMPHIBIOUS BASE		5,000
NORFOLK MARINE CORPS SEC FORCE BATT LANT		
BACHELOR ENLISTED QUARTERS	6,480	
NORFOLK MARINE CORPS SEC FORCE BATT LANT		6,480
NORFOLK NAVAL STATION		
BACHELOR ENLISTED QUARTERS	16,430	
FAMILY SERVICES CENTER	5,100	
NORFOLK NAVAL STATION		21,530
QUANTICO MARINE CORPS COMBAT DEV COMMAND		
SEWAGE TREATMENT PLANT	19,900	
QUANTICO MARINE CORPS COMBAT DEV COMMAND		19,900

**NAVY		65,910
AIR FORCE		
LANGLEY AFB		
CHILD DEVELOPMENT CENTER	5,500	
LANGLEY AFB		5,500
DEFENSE LOGISTICS AGENCY		
FT. BELVOIR		
CHILD DEVELOPMENT CENTER	4,600	
FT. BELVOIR		4,600
DEF FUEL SUPPORT POINT CRANEY ISLAND		
MAINTENANCE & OPERATIONS FACILITY	3,652	
DEF FUEL SUPPORT POINT CRANEY ISLAND		3,652

**DEFENSE LOGISTICS AGENCY		8,252
DOD DEPENDENT SCHOOLS		
DAHLGREN NAVAL SURFACE WARFARE CENTER		
DAHLGREN NSWC DEPENDENT SCHOOL ADD	1,560	
DAHLGREN NAVAL SURFACE WARFARE CENTER		1,560
DEFENSE MEDICAL SUPPORT ACTIVITY		
PORTSMOUTH NAVAL HOSPITAL		
#HOSPITAL REPLACEMENT PHASE VI	120,000	
PORTSMOUTH NAVAL HOSPITAL		120,000
AUTHORIZED IN PRIOR YEAR		(120,000)
AIR NATIONAL GUARD		
RICHARD E BYRD IAP		
JET FUEL STORAGE COMPLEX	4,500	
RICHARD E BYRD IAP		4,500
FAMILY HOUSING		
NAVY		
NAVAL SHIPYARD PORTSMOUTH		
NEW CONSTRUCTION (SELF HELP/WAREHOUSE)	(555)	
NAVAL SHIPYARD PORTSMOUTH		
FAMILY HOUSING		(555)

AUTHORIZED IN PRIOR YEAR

FY 1995 MILITARY CONSTRUCTION TOTAL OBLIGATIONAL AUTHORITY AS ENACTED

ACTIVE, GUARD AND RESERVE FORCES
INSIDE THE UNITED STATES
($ THOUSANDS)

DATA AS OF FEB 1995

STATE/COMP./INSTALLATION ----------PROJECT NAME----------	PROJ COST	TOTAL
VIRGINIA		
AIR FORCE		
LANGLEY AFB		
FAMILY HOUSING (148 UNITS)	(14,421)	
LANGLEY AFB		
FAMILY HOUSING		(14,421)
**VIRGINIA		228,622
AUTHORIZED IN PRIOR YEAR		(120,000)
FAMILY HOUSING		(14,976)
WASHINGTON		
ARMY		
FORT LEWIS		
WHOLE BARRACKS RENEWAL	32,000	
WHOLE BARRACKS RENEWAL	32,000	
FORT LEWIS		64,000
NAVY		
BREMERTON PUGET SOUND NAVAL SHIPYARD		
INDUSTRIAL WASTEWATER TREATMENT FACILITY	3,200	
UTILITIES AND SITE IMPROVEMENTS	7,840	
BREMERTON PUGET SOUND NAVAL SHIPYARD		11,040
EVERETT NAVAL STATION		
BACHELOR ENLISTED QUARTERS	7,450	
CHILD DEVELOPMENT CENTER	2,900	
FLEET RECREATION CENTER	3,000	
HAZARDOUS WASTE STORAGE AND TRANSFER FAC	1,500	
PHYSICAL FITNESS FACILITIES	6,840	
EVERETT NAVAL STATION		21,690
WHIDBEY ISLAND NAVAL AIR STATION		
FIRE FIGHTING TRAINING FACILITY	1,400	
INDUSTRIAL WASTEWATER PRETREATMENT FAC	1,400	
WASTEWATER TREATMENT PLANT UPGRADE	2,400	
WHIDBEY ISLAND NAVAL AIR STATION		5,200
**NAVY		37,930
AIR FORCE		
FAIRCHILD AFB		
ADAL FLIGHT SIMULATOR FACILITY	4,000	
HAZARDOUS MATERIAL STORAGE FACILITY	1,400	
KC 135 SQ OPS AMU FACILITY	6,300	
STORM DRAINAGE FACILITIES	2,450	
SURVIVAL TRAINING SPT FACILITY	3,750	
FAIRCHILD AFB		17,900
MCCHORD AFB		
ADAL CONSOLIDATED SUPPORT CENTER	7,700	
CONTROL TOWER	2,700	
MCCHORD AFB		10,400
**AIR FORCE		28,300
AIR NATIONAL GUARD		
FAIRCHILD AFB		
ADAL SQUADRON OPERATIONS FACILITY	1,250	
FAIRCHILD AFB		1,250
NAVY RESERVE		
NAVRESCEN SEATTLE		
JOINT TRAINING CENTER CONSTRUCTION	10,400	
NAVRESCEN SEATTLE		10,400

FY 1995 MILITARY CONSTRUCTION TOTAL OBLIGATIONAL AUTHORITY AS ENACTED

ACTIVE, GUARD AND RESERVE FORCES
INSIDE THE UNITED STATES
($ THOUSANDS)

DATA AS OF FEB 1995

STATE/COMP./INSTALLATION ----------PROJECT NAME----------	PROJ COST	TOTAL
WASHINGTON		
FAMILY HOUSING		
NAVY		
NAVAL STATION PUGET SOUND, EVERETT		
NEW CONSTRUCTION (HSG OFFICE)	(780)	
NAVAL STATION PUGET SOUND, EVERETT		
FAMILY HOUSING		(780)
AIR FORCE		
FAIRCHILD AFB		
FAMILY HOUSING (6 UNITS)	(1,035)	
FAIRCHILD AFB		
FAMILY HOUSING		(1,035)
**WASHINGTON		141,880
FAMILY HOUSING		(1,815)
WEST VIRGINIA		
AIR NATIONAL GUARD		
E WV REGIONAL APT (MARTINSBURG)		
REPLACE UNDERGROUND FUEL STORAGE TANKS	500	
E WV REGIONAL APT (MARTINSBURG)		500
WISCONSIN		
AIR NATIONAL GUARD		
BILLY MITCHELL FIELD		
REPLACE CENTRAL HEAT PLANT	800	
BILLY MITCHELL FIELD		800
TRUAX FIELD		
ADAL AGE SHOP/STORAGE	340	
TRUAX FIELD		340
VOLK FIELD		
BASE FACILITY IMPROVEMENTS	4,900	
FIREMEN TRAINING FACILITY	700	
VOLK FIELD		5,600
**AIR NATIONAL GUARD		6,740
AIR FORCE RESERVE		
BILLY MITCHELL FIELD		
FIRE FIGHTER TRAINING FACILITY	1,450	
INSTALL AIR EMISSION CONTROL DEVICE	750	
BILLY MITCHELL FIELD		2,200
**WISCONSIN		8,940
WYOMING		
AIR FORCE		
F E WARREN AFB		
UNGD FUEL STORAGE TANKS - MISSILE FAC	2,650	
F E WARREN AFB		2,650
ARMY NATIONAL GUARD		
TORRINGTON		
ARMORY	5,300	
TORRINGTON		5,300
FAMILY HOUSING		
AIR FORCE		
F E WARREN AFB		
FAMILY HOUSING (106 UNITS)	(11,321)	
F E WARREN AFB		
FAMILY HOUSING		(11,321)
**WYOMING		7,950
FAMILY HOUSING		(11,321)

FY 1995 MILITARY CONSTRUCTION TOTAL OBLIGATIONAL AUTHORITY AS ENACTED

ACTIVE, GUARD AND RESERVE FORCES — DATA AS OF FEB 1995
INSIDE THE UNITED STATES
($ THOUSANDS)

STATE/COMP./INSTALLATION ----------PROJECT NAME----------	PROJ COST	TOTAL
CONUS CLASSIFIED		
ARMY		
CLASSIFIED LOCATIONS		
CLASSIFIED PROJECT	1,900	
CLASSIFIED LOCATIONS		1,900
AIR FORCE		
CLASSIFIED LOCATION		
SPECIAL TACTICAL UNIT DETACHMENT FACILITY	2,141	
CLASSIFIED LOCATION		2,141
**CONUS CLASSIFIED		4,041
CONUS VARIOUS		
NAVY		
CONUS VARIOUS		
AIRCRAFT FIRE/RESCUE STA & VEH MAINT FAC	2,200	
CONUS VARIOUS		2,200

TOTALS

ARMY	686,126
(MEMO-NON-ADD)	(9,700)
FAMILY HOUSING	{114,250}
NAVY	358,910
FAMILY HOUSING	{87,182}
AIR FORCE	740,505
AUTHORIZED IN PRIOR YEAR	(4,000)
FAMILY HOUSING	{206,399}
DEFENSEWIDE	363,670
AUTHORIZED IN PRIOR YEAR	(261,000)
INSIDE THE UNITED STATES	2,149,211
(MEMO-NON-ADD)	(9,700)
AUTHORIZED IN PRIOR YEAR	(265,000)
FAMILY HOUSING	{407,831}

FY 1995 MILITARY CONSTRUCTION TOTAL OBLIGATIONAL AUTHORITY AS ENACTED

ACTIVE, GUARD AND RESERVE FORCES DATA AS OF FEB 1995
SPECIFIED OUTSIDE THE UNITED STATES
($ THOUSANDS)

STATE/COMP./INSTALLATION ----------PROJECT NAME----------	PROJ COST	TOTAL
BELGIUM		
FAMILY HOUSING		
NATIONAL SECURITY AGENCY		
BELGIUM		
OFFICIAL RESIDENCE PURCHASE	(300)	
BELGIUM		
FAMILY HOUSING		(300)
GERMANY		
AIR FORCE		
RAMSTEIN AB		
HAZARDOUS WASTE STORAGE FACILITY	1,150	
UPGRADE SEWAGE COLLECTION SYSTEM	11,200	
RAMSTEIN AB		12,350
SPANGDAHLEM AB		
CHILD DEVELOPMENT CENTER	2,273	
UPGD SEWAGE TREATMENT PLANT & SEWER SYS	7,200	
SPANGDAHLEM AB		9,473
**AIR FORCE		21,823
GREECE		
NAVY		
SOUDA BAY CRETE NAVAL SUPPORT ACTIVITY		
AIRCRAFT PARKING APRON	3,050	
SOUDA BAY CRETE NAVAL SUPPORT ACTIVITY		3,050
GREENLAND		
AIR FORCE		
THULE AB		
FIRE TRAINING FACILITY	2,450	
THULE AB		2,450
ITALY		
NAVY		
NAPLES NAVAL SUPPORT ACTIVITY		
BACHELOR ENLISTED QUARTERS	19,360	
QUALITY OF LIFE FACILITIES (INCREMENT II)	9,100	
NAPLES NAVAL SUPPORT ACTIVITY		28,460
SIGONELLA NAVAL AIR STATION		
BACHELOR ENLISTED QUARTERS	13,750	
SIGONELLA NAVAL AIR STATION		13,750
**NAVY		42,210
KOREA		
ARMY		
CAMP CASEY		
BARRACKS	24,000	
BARRACKS	5,200	
CAMP CASEY		29,200
CAMP RED CLOUD		
BARRACKS	5,400	
CAMP RED CLOUD		5,400
**ARMY		34,600
KWAJALEIN		
ARMY		
KWAJALEIN		
COVER RAW WATER TANKS	5,200	

FY 1995 MILITARY CONSTRUCTION TOTAL OBLIGATIONAL AUTHORITY AS ENACTED

ACTIVE, GUARD AND RESERVE FORCES SPECIFIED OUTSIDE THE UNITED STATES ($ THOUSANDS)

DATA AS OF FEB 1995

STATE/COMP./INSTALLATION ----------PROJECT NAME----------	PROJ COST	TOTAL
KWAJALEIN		
ARMY		
KWAJALEIN		
FUEL CONTAINMENT FACILITY	1,200	
KWAJALEIN		6,400
PORTUGAL		
AIR FORCE		
LAJES FIELD		
REFUSE INCINERATOR	2,850	
LAJES FIELD		2,850
PUERTO RICO		
NAVY		
SABANA SECA NAVAL SECURITY GROUP ACTIVITY		
OPERATIONS BUILDING ADDITION	1,650	
SABANA SECA NAVAL SECURITY GROUP ACTIVITY		1,650
AIR NATIONAL GUARD		
PUERTO RICO IAP		
ADD TO AND ALTER AIRCRAFT CORROSION FAC	750	
REPLACE UNDERGROUND FUEL STORAGE TANKS	590	
PUERTO RICO IAP		1,340
**PUERTO RICO		2,990
UNITED KINGDOM		
NAVY		
ST MAWGAN JOINT MARITIME COMMUNICATION CTR		
CHILD DEVELOPMENT AND YOUTH CENTER	3,900	
ST MAWGAN JOINT MARITIME COMMUNICATION CTR		3,900
AIR FORCE		
RAF LAKENHEATH		
ADD TO AND ALTER DORMITORY	3,700	
F-15E ADD TO MUNITIONS MAINTENANCE FAC	850	
UPGRADE STORM DRAINAGE SYSTEM	2,550	
RAF LAKENHEATH		7,100
**UNITED KINGDOM		11,000
OVERSEAS CLASSIFIED		
AIR FORCE		
OVERSEAS CLASSIFIED		
WAR READINESS MAINTENANCE/MANAGEMENT FAC	1,300	
WAR READINESS MATERIEL MEDICAL STORAGE FAC	2,100	
WAR READINESS MATERIEL OPEN STORAGE FAC	650	
OVERSEAS CLASSIFIED		4,050

FY 1995 MILITARY CONSTRUCTION TOTAL OBLIGATIONAL AUTHORITY AS ENACTED

ACTIVE, GUARD AND RESERVE FORCES
SPECIFIED OUTSIDE THE UNITED STATES
($ THOUSANDS)

DATA AS OF FEB 1995

STATE/COMP./INSTALLATION PROJECT NAME	PROJ COST	TOTAL
TOTALS		
ARMY		41,000
NAVY		50,810
AIR FORCE		39,613
DEFENSEWIDE		
FAMILY HOUSING		(300)
SPECIFIED OUTSIDE THE UNITED STATES		131,423
FAMILY HOUSING		(300)

FY 1995 MILITARY CONSTRUCTION TOTAL OBLIGATIONAL AUTHORITY AS ENACTED

ACTIVE, GUARD AND RESERVE FORCES — DATA AS OF FEB 1995
UNSPECIFIED WORLDWIDE
($ THOUSANDS)

STATE/COMP./INSTALLATION ----------PROJECT NAME----------	PROJ COST	TOTAL
WORLDWIDE UNSPECIFIED		
NATO INFRASTRUCTURE		
DEFENSE LEVEL ACTIVITIES	119,000	
NATO INFRASTRUCTURE		119,000
BASE REALIGNMENT & CLOSURE PART I		
DEFENSE LEVEL ACTIVITIES	87,600	
BASE REALIGNMENT & CLOSURE PART I		87,600
BASE REALIGNMENT & CLOSURE PART II		
DEFENSE LEVEL ACTIVITIES	607,489	
BASE REALIGNMENT & CLOSURE PART II		607,489
BASE REALIGNMENT & CLOSURE ACCT PART III		
DEFENSE LEVEL ACTIVITIES	2,114,069	
BASE REALIGNMENT & CLOSURE ACCT PART III		2,114,069
CONTINGENCY CONSTRUCTION		
DEFENSE LEVEL ACTIVITIES	16,140	
CONTINGENCY CONSTRUCTION		16,140
UNSPECIFIED MINOR CONSTRUCTION		
ARMY	12,000	
NAVY	7,000	
AIR FORCE	7,000	
SPECIAL OPERATIONS COMMAND	4,020	
DEFENSE LEVEL ACTIVITIES	3,000	
JOINT CHIEFS OF STAFF	5,873	
DOD DEPENDENT SCHOOLS	4,430	
DEFENSE MEDICAL SUPPORT ACTIVITY	5,025	
ARMY NATIONAL GUARD	5,167	
AIR NATIONAL GUARD	4,000	
ARMY RESERVE	2,657	
NAVY RESERVE	158	
AIR FORCE RESERVE	4,000	
UNSPECIFIED MINOR CONSTRUCTION		64,330
PLANNING AND DESIGN		
ARMY	56,126	
NAVY	43,380	
AIR FORCE	49,386	
SPECIAL OPERATIONS COMMAND	5,713	
DEFENSE FINANCE AND ACCOUNTING SERVICE	6,000	
BALLISTIC MISSILE DEFENSE ORAGNIZATION	530	
DEFENSE LEVEL ACTIVITIES	12,360	
DEF INTELLIGENCE AGENCY	450	
DEFENSE MEDICAL SUPPORT ACTIVITY	26,907	
ARMY NATIONAL GUARD	5,900	
AIR NATIONAL GUARD	14,823	
ARMY RESERVE	5,253	
NAVY RESERVE	1,800	
AIR FORCE RESERVE	3,500	
PLANNING AND DESIGN		232,128
ENERGY CONSERVATION IMPROVEMENT PROGRAM		
DEFENSE LEVEL ACTIVITIES	50,000	
ENERGY CONSERVATION IMPROVEMENT PROGRAM		50,000
ARMY - HOST NATION SUPPORT		
ARMY	10,000	
ARMY - HOST NATION SUPPORT		10,000
WORLDWIDE UNSPECIFIED		3,300,756
WORLDWIDE VARIOUS		
ARMY		
CONGRESSIONAL REDUCTIONS-WORLDWIDE VARIOUS		
GENERAL REDUCTION	-40,000	
CONGRESSIONAL REDUCTIONS-WORLDWIDE VARIOUS		-40,000

FY 1995 MILITARY CONSTRUCTION TOTAL OBLIGATIONAL AUTHORITY AS ENACTED

ACTIVE, GUARD AND RESERVE FORCES DATA AS OF FEB 1995
UNSPECIFIED WORLDWIDE
($ THOUSANDS)

STATE/COMP./INSTALLATION ----------PROJECT NAME----------	PROJ COST	TOTAL
WORLDWIDE VARIOUS		
ARMY		
OVERSEAS VARIOUS LOCATIONS-WORLDWIDE VARIOUS		
HOST NATION SUPPORT	10,000	
OVERSEAS VARIOUS LOCATIONS-WORLDWIDE VARIOUS		10,000
ARMY		-30,000
NAVY		
CONGRESSIONAL REDUCTIONS-WORLDWIDE VARIOUS		
CONGRESSIONAL REDUCTION	-40,000	
CONGRESSIONAL REDUCTIONS-WORLDWIDE VARIOUS		-40,000
AIR FORCE		
CONGRESSIONAL REDUCTIONS-WORLDWIDE VARIOUS		
GENERAL REDUCTION	-40,000	
CONGRESSIONAL REDUCTIONS-WORLDWIDE VARIOUS		-40,000
ARMY NATIONAL GUARD		
VARIOUS LOCATIONS-WORLDWIDE VARIOUS		
ARMORY UNIT STORAGE BUILDING	840	
INDOOR RANGE MODERNIZATION	839	
VARIOUS LOCATIONS-WORLDWIDE VARIOUS		1,679
AIR NATIONAL GUARD		
CONGRESSIONAL REDUCTIONS-WORLDWIDE VARIOUS		
GENERAL REDUCTION	-465	
CONGRESSIONAL REDUCTIONS-WORLDWIDE VARIOUS		-465
WORLDWIDE VARIOUS		-108,786

TOTALS

ARMY	68,782
NAVY	12,338
AIR FORCE	42,244
DEFENSEWIDE	3,068,606
UNSPECIFIED WORLDWIDE	3,191,970

FY 1995 FAMILY HOUSING TOTAL OBLIGATIONAL AUTHORITY AS ENACTED

DATA AS OF FEB 1995

($ THOUSANDS)

STATE/COMP./INSTALLATION ----------PROJECT NAME----------	PROJ COST	TOTAL
ARMY		
NEW CONSTRUCTION		
ALASKA		
FT RICHARDSON		
REPLACEMENT CONSTRUCTION (72)	5,000	
FT RICHARDSON		5,000
COLORADO		
FORT CARSON		
REPLACEMENT CONSTRUCTION (145)	16,500	
FORT CARSON		16,500
GEORGIA		
FORT STEWART		
#REPLACEMENT CONSTRUCTION (120)		
(MEMO-NON-ADD)	(9,700)	
REPLACEMENT CONSTRUCTION (128)	10,600	
FORT STEWART		10,600
(MEMO-NON-ADD)		(9,700)
HAWAII		
SCHOFIELD BARRACKS		
REPLACEMENT CONSTRUCTION (190)	26,000	
SCHOFIELD BARRACKS		26,000
KANSAS		
FORT LEAVENWORTH		
REPLACEMENT CONSTRUCTION (126)	12,600	
FORT LEAVENWORTH		12,600
MASSACHUSETTS		
NATICK RESEARCH CENTER		
REPLACEMENT CONSTRUCTION (35)	4,150	
NATICK RESEARCH CENTER		4,150
NEW YORK		
U S MILITARY ACADEMY		
REPLACEMENT CONSTRUCTION (56)	8,000	
U S MILITARY ACADEMY		8,000
TEXAS		
FORT BLISS		
REPLACEMENT CONSTRUCTION (105)	10,800	
REPLACEMENT CONSTRUCTION (110)	10,600	
FORT BLISS		21,400
FORT SAM HOUSTON		
REPLACEMENT CONSTRUCTION (100)	10,000	
FORT SAM HOUSTON		10,000
TEXAS		31,400
NEW CONSTRUCTION		114,250
(MEMO-NON-ADD)		(9,700)
CONSTRUCTION IMPROVEMENTS	49,760	49,760
PLANNING	5,992	5,992
TOTAL FAMILY HOUSING, ARMY CONSTRUCTION		170,002
(MEMO-NON-ADD)		(9,700)
OPERATING EXPENSES		
FURNISHINGS ACCOUNT	51,270	
MANAGEMENT ACCOUNT	83,241	
MISCELLANEOUS ACCOUNT	1,200	
SERVICES ACCOUNT	52,806	
UTILITIES ACCOUNT	266,077	
OPERATING EXPENSES		454,594

AUTHORIZED IN PRIOR YEAR

FY 1995 FAMILY HOUSING TOTAL OBLIGATIONAL AUTHORITY AS ENACTED

DATA AS OF FEB 1995

($ THOUSANDS)

STATE/COMP./INSTALLATION ----------PROJECT NAME----------	PROJ COST	TOTAL
ARMY		
LEASING	234,441	234,441
MAINTENANCE OF REAL PROPERTY	324,662	324,662
TOTAL FAMILY HOUSING, ARMY OPERATIONS		1,013,697
INTEREST PAYMENTS	11	11
TOTAL FAMILY HOUSING, ARMY DEBT		11
GRAND TOTAL FAMILY HOUSING, ARMY		1,183,710
(MEMO-NON-ADD)		(9,700)
NAVY		
NEW CONSTRUCTION		
CALIFORNIA		
MARINE CORPS BASE CAMP PENDLETON		
NEW CONSTRUCTION (196 HOMES)	28,552	
MARINE CORPS BASE CAMP PENDLETON		28,552
PUBLIC WORKS CENTER SAN DIEGO		
NEW CONSTRUCTION (136 HOMES)	18,262	
PUBLIC WORKS CENTER SAN DIEGO		18,262
CALIFORNIA		46,814
HAWAII		
NAVAL COMPLEX, OAHU		
100 UNITS REPLACEMENT	16,000	
NAVAL COMPLEX, OAHU		16,000
MARYLAND		
NAVAL AIR TEST CENTER PATUXENT RIVER		
NEW CONSTRUCTION (HSG OFFICE)	863	
NAVAL AIR TEST CENTER PATUXENT RIVER		863
MISSISSIPPI		
NCBC GULFPORT MS		
120 UNITS NEW CONSTRUCTION	10,370	
NCBC GULFPORT MS		10,370
TEXAS		
NAVAL COMPLEX CORPUS CHRISTI		
100 UNITS REPLACEMENT	11,800	
NAVAL COMPLEX CORPUS CHRISTI		11,800
VIRGINIA		
NAVAL SHIPYARD PORTSMOUTH		
NEW CONSTRUCTION (SELF HELP/WAREHOUSE)	555	
NAVAL SHIPYARD PORTSMOUTH		555
WASHINGTON		
NAVAL STATION PUGET SOUND, EVERETT		
NEW CONSTRUCTION (HSG OFFICE)	780	
NAVAL STATION PUGET SOUND, EVERETT		780
NEW CONSTRUCTION		87,182
CONSTRUCTION IMPROVEMENTS	155,602	155,602
PLANNING	24,681	24,681
TOTAL FAMILY HOUSING, NAVY CONSTRUCTION		267,465
OPERATING EXPENSES		
FURNISHINGS ACCOUNT	38,663	

FY 1995 FAMILY HOUSING TOTAL OBLIGATIONAL AUTHORITY AS ENACTED

DATA AS OF FEB 1995

($ THOUSANDS) STATE/COMP./INSTALLATION ----------PROJECT NAME----------	PROJ COST	TOTAL
NAVY		
OPERATING EXPENSES		
MANAGEMENT ACCOUNT	87,907	
MISCELLANEOUS ACCOUNT	1,217	
SERVICES ACCOUNT	62,593	
UTILITIES ACCOUNT	208,949	
OPERATING EXPENSES		399,329
LEASING	99,826	99,826
MAINTENANCE OF REAL PROPERTY	438,359	438,359
TOTAL FAMILY HOUSING, NAVY OPERATIONS		937,514
MORTGAGE INSURANCE PREMIUMS	85	85
TOTAL FAMILY HOUSING, NAVY DEBT		85
GRAND TOTAL FAMILY HOUSING, NAVY		1,205,064
AIR FORCE		
NEW CONSTRUCTION		
ALABAMA		
MAXWELL AFB		
FAMILY HOUSING (25 UNITS)	2,100	
MAXWELL AFB		2,100
ARIZONA		
DAVIS-MONTHAN AFB		
FAMILY HOUSING (120 UNITS)	10,029	
DAVIS-MONTHAN AFB		10,029
CALIFORNIA		
BEALE AFB		
FAMILY HOUSING (76 UNITS)	8,842	
BEALE AFB		8,842
EDWARDS AFB		
FAMILY HOUSING (34 UNITS)	4,629	
EDWARDS AFB		4,629
LOS ANGELES AFS		
FAMILY HOUSING (50 UNITS)	8,962	
LOS ANGELES AFS		8,962
VANDENBERG AFB		
FAMILY HOUSING (128 UNITS)	16,460	
VANDENBERG AFB		16,460
CALIFORNIA		38,893
DISTRICT OF COLUMBIA		
BOLLING AFB		
FAMILY HOUSING (100 UNITS)	9,000	
BOLLING AFB		9,000
FLORIDA		
PATRICK AFB		
FAMILY HOUSING (75 UNITS)	7,145	
PATRICK AFB		7,145
IDAHO		
MOUNTAIN HOME AFB		
FAMILY HOUSING (4 UNITS)	881	
FAMILY HOUSING (60 UNITS)	5,712	
MOUNTAIN HOME AFB		6,593
ILLINOIS		
SCOTT AFB		
CARDINAL CREEK PHASE III	30,000	
SCOTT AFB		30,000

FY 1995 FAMILY HOUSING TOTAL OBLIGATIONAL AUTHORITY AS ENACTED

DATA AS OF FEB 1995

($ THOUSANDS) STATE/COMP./INSTALLATION ----------PROJECT NAME----------	PROJ COST	TOTAL
AIR FORCE		
NEW CONSTRUCTION		
KANSAS		
MCCONNELL AFB		
FAMILY HOUSING (70 UNITS)	8,322	
MCCONNELL AFB		8,322
LOUISIANA		
BARKSDALE AFB		
FAMILY HOUSING (82 UNITS)	8,236	
BARKSDALE AFB		8,236
MISSOURI		
WHITEMAN AFB		
HOUSING OFFICE	567	
WHITEMAN AFB		567
NEW MEXICO		
CANNON AFB		
FAMILY HOUSING (1 UNIT)	230	
CANNON AFB		230
HOLLOMAN AFB		
FAMILY HOUSING (76 UNITS)	7,733	
HOLLOMAN AFB		7,733
KIRTLAND AFB		
FAMILY HOUSING (106 UNITS)	10,058	
KIRTLAND AFB		10,058
NEW MEXICO		18,021
NORTH CAROLINA		
POPE AFB		
FAMILY HOUSING (120 UNITS)	14,874	
POPE AFB		14,874
SEYMOUR JOHNSON AFB		
FAMILY HOUSING (74 UNITS)	6,025	
SEYMOUR JOHNSON AFB		6,025
NORTH CAROLINA		20,899
NORTH DAKOTA		
GRAND FORKS AFB		
HOUSING OFFICE	709	
GRAND FORKS AFB		709
SOUTH CAROLINA		
SHAW AFB		
FAMILY HOUSING (3 UNITS)	631	
SHAW AFB		631
TEXAS		
DYESS AFB		
FAMILY HOUSING (59 UNITS)	7,077	
DYESS AFB		7,077
UTAH		
HILL AFB		
FAMILY HOUSING (138 UNITS)	11,400	
HILL AFB		11,400
VIRGINIA		
LANGLEY AFB		
FAMILY HOUSING (148 UNITS)	14,421	
LANGLEY AFB		14,421
WASHINGTON		
FAIRCHILD AFB		
FAMILY HOUSING (6 UNITS)	1,035	
FAIRCHILD AFB		1,035

FY 1995 FAMILY HOUSING TOTAL OBLIGATIONAL AUTHORITY AS ENACTED

DATA AS OF FEB 1995

($ THOUSANDS) STATE/COMP./INSTALLATION ----------PROJECT NAME----------	PROJ COST	TOTAL
AIR FORCE		
NEW CONSTRUCTION		
WYOMING		
F E WARREN AFB		
FAMILY HOUSING (106 UNITS)	11,321	
F E WARREN AFB		11,321
NEW CONSTRUCTION		206,399
CONSTRUCTION IMPROVEMENTS	61,770	61,770
PLANNING	9,275	9,275
TOTAL FAMILY HOUSING, AIR FORCE CONSTRUCTION		277,444
OPERATING EXPENSES		
FURNISHINGS ACCOUNT	42,852	
MANAGEMENT ACCOUNT	45,076	
MISCELLANEOUS ACCOUNT	5,794	
SERVICES ACCOUNT	32,724	
UTILITIES ACCOUNT	178,472	
OPERATING EXPENSES		304,918
LEASING	112,757	112,757
MAINTENANCE OF REAL PROPERTY	407,144	407,144
TOTAL FAMILY HOUSING, AIR FORCE OPERATIONS		824,819
MORTGAGE INSURANCE PREMIUMS	26	26
TOTAL FAMILY HOUSING, AIR FORCE DEBT		26
GRAND TOTAL FAMILY HOUSING, AIR FORCE		1,102,289
NATIONAL SECURITY AGENCY		
NEW CONSTRUCTION		
BELGIUM		
BELGIUM		
OFFICIAL RESIDENCE PURCHASE	300	
BELGIUM		300
NEW CONSTRUCTION		300
CONSTRUCTION IMPROVEMENTS	50	50
OPERATING EXPENSES		
FURNISHINGS ACCOUNT	75	
MANAGEMENT ACCOUNT	65	
MISCELLANEOUS ACCOUNT	31	
SERVICES ACCOUNT	341	
UTILITIES ACCOUNT	420	
OPERATING EXPENSES		932
LEASING	10,779	10,779
MAINTENANCE OF REAL PROPERTY	222	222
TOTAL FAMILY HOUSING, NSA		12,283
DEF INTELLIGENCE AGENCY		
OPERATING EXPENSES		
FURNISHINGS ACCOUNT	2,363	
OPERATING EXPENSES		2,363
LEASING	13,272	13,272
TOTAL FAMILY HOUSING, DIA		15,635

FY 1995 FAMILY HOUSING TOTAL OBLIGATIONAL AUTHORITY AS ENACTED

DATA AS OF FEB 1995

($ THOUSANDS)

STATE/COMP./INSTALLATION ----------PROJECT NAME----------	PROJ COST	TOTAL
DEFENSE LOGISTICS AGENCY		
OPERATING EXPENSES		
FURNISHINGS ACCOUNT	47	
MANAGEMENT ACCOUNT	158	
SERVICES ACCOUNT	50	
UTILITIES ACCOUNT	460	
OPERATING EXPENSES		715
MAINTENANCE OF REAL PROPERTY	748	748
TOTAL FAMILY HOUSING, DLA		1,463
GRAND TOTAL FAMILY HOUSING, DEFENSE		29,381
ARMY		
PAYMENT TO HOMEOWNERS	10,640	10,640
OTHER OPERATING COSTS	34,018	34,018
ACQUISITION OF REAL PROPERTY	124,526	124,526
ARMY		169,184

FY 1996 MILITARY CONSTRUCTION TOTAL OBLIGATIONAL AUTHORITY AS REQUESTED

ACTIVE, GUARD AND RESERVE FORCES INSIDE THE UNITED STATES ($ THOUSANDS) — DATA AS OF FEB 1995

STATE/COMP./INSTALLATION ----------PROJECT NAME----------	PROJ COST	TOTAL
ALABAMA		
AIR FORCE		
MAXWELL AFB		
CHILD DEVELOPMENT CENTER COMPLEX	3,700	
MAXWELL AFB		3,700
DEFENSE LOGISTICS AGENCY		
DEF DISTRIBUTION ANNISTON - DDAA		
VEHICLE STORAGE SHELTER (DBOF)	3,550	
DEF DISTRIBUTION ANNISTON - DDAA		3,550
DOD DEPENDENT SCHOOLS		
MAXWELL AFB		
MAXWELL ELEM SCHOOL ADDITION/ALTERATION	5,479	
MAXWELL AFB		5,479
AIR NATIONAL GUARD		
BIRMINGHAM MAP		
ALTER KC-135 AIRCRAFT SHOPS	4,400	
BIRMINGHAM MAP		4,400
DANNELLY FIELD		
FIRE STATION	1,445	
DANNELLY FIELD		1,445
**AIR NATIONAL GUARD		5,845
ARMY RESERVE		
JASPER		
ADD/ALT TO USARC/OMS/AMSA	2,500	
JASPER		2,500
AIR FORCE RESERVE		
MAXWELL AFB		
COMPOSITE MAINTENANCE SHOPS	3,608	
MAXWELL AFB		3,608
**ALABAMA		24,682
ALASKA		
AIR FORCE		
EIELSON AFB		
ALTER DORMITORY	3,850	
EIELSON AFB		3,850
ELMENDORF AFB		
MILSTAR COMMUNICATIONS GROUND TERMINAL	850	
REPAIR AIRFIELD TAXIWAY	900	
VISITING OFFICERS QUARTERS	7,350	
ELMENDORF AFB		9,100
TIN CITY		
ABOVE GROUND FUEL TANKS	2,500	
TIN CITY		2,500
**AIR FORCE		15,450
DEFENSE MEDICAL SUPPORT ACTIVITY		
ELMENDORF AIR FORCE BASE		
#HOSPITAL REPLACEMENT PHASE IV	28,100	
ELMENDORF AIR FORCE BASE		28,100
AUTHORIZED IN PRIOR YEAR		(28,100)
ARMY RESERVE		
FORT WAINWRIGHT		
USARC/OMS/STORAGE	4,779	
FORT WAINWRIGHT		4,779

AUTHORIZED IN PRIOR YEAR

FY 1996 MILITARY CONSTRUCTION TOTAL OBLIGATIONAL AUTHORITY AS REQUESTED

ACTIVE, GUARD AND RESERVE FORCES INSIDE THE UNITED STATES ($ THOUSANDS) — DATA AS OF FEB 1995

STATE/COMP./INSTALLATION ----------PROJECT NAME----------	PROJ COST	TOTAL
ALASKA		
FAMILY HOUSING		
AIR FORCE		
ELMENDORF AFB		
HOUSING OFFICE AND MAINTENANCE FACILITY	(3,000)	
ELMENDORF AFB		
FAMILY HOUSING		(3,000)
**ALASKA		48,329
AUTHORIZED IN PRIOR YEAR		(28,100)
FAMILY HOUSING		(3,000)
ARIZONA		
ARMY		
FORT HUACHUCA		
WHOLE BARRACKS COMPLEX RENEWAL	16,000	
FORT HUACHUCA		16,000
AIR FORCE		
DAVIS-MONTHAN AFB		
ALTER AIRCRAFT CORROSION CONTROL FACILITY	1,000	
DORMITORY	3,800	
DAVIS-MONTHAN AFB		4,800
LUKE AFB		
DORMITORY	5,200	
LUKE AFB		5,200
**AIR FORCE		10,000
DEFENSE MEDICAL SUPPORT ACTIVITY		
LUKE AIR FORCE BASE		
HOSPITAL ADD/ALT LIFE SAFETY UPGRADE	8,100	
LUKE AIR FORCE BASE		8,100
AIR NATIONAL GUARD		
TUCSON IAP		
ADD TO & ALTER AIRCRAFT SPT EQUIP SHOP	600	
TUCSON IAP		600
FAMILY HOUSING		
AIR FORCE		
DAVIS-MONTHAN AFB		
REPLACE 80 MILITARY FAMILY HOUSING UNITS,	(9,498)	
DAVIS-MONTHAN AFB		
FAMILY HOUSING		(9,498)
**ARIZONA		34,700
FAMILY HOUSING		(9,498)
ARKANSAS		
AIR FORCE		
LITTLE ROCK AFB		
UPGRADE SANITARY SEWER SYSTEM	2,500	
LITTLE ROCK AFB		2,500
ARMY BUDGETED BY DOD		
PINE BLUFF ARSENAL		
AMMUNITION DEMILITARIZATION FAC PHASE II	40,000	
PINE BLUFF ARSENAL		40,000
FAMILY HOUSING		
AIR FORCE		
LITTLE ROCK AFB		
REPLACE 1 GENERAL OFFICER'S QUARTERS UNIT	(210)	
LITTLE ROCK AFB		
FAMILY HOUSING		(210)
**ARKANSAS		42,500
FAMILY HOUSING		(210)

FY 1996 MILITARY CONSTRUCTION TOTAL OBLIGATIONAL AUTHORITY AS REQUESTED

ACTIVE, GUARD AND RESERVE FORCES INSIDE THE UNITED STATES ($ THOUSANDS)

DATA AS OF FEB 1995

STATE/COMP./INSTALLATION ----------PROJECT NAME----------	PROJ COST	TOTAL
CALIFORNIA		
ARMY		
FT IRWIN		
CONSOLIDATED MAINTENANCE FACILITY	15,500	
FT IRWIN		15,500
PRESIDIO OF SAN FRANCISCO		
REGIONAL SEWER SYSTEM	3,000	
PRESIDIO OF SAN FRANCISCO		3,000
**ARMY		18,500
NAVY		
CAMP PENDLETON MARINE CORPS BASE		
BACHELOR ENLISTED QUARTERS	11,940	
CHILD DEVELOPMENT CENTER	3,000	
MULTI-PURPOSE MG RANGE	3,800	
PHYSICAL FITNESS CENTER	4,100	
SENSITIVE COMPARTMENTED INFO FACILITY ADD	2,246	
TACTICAL VEHICLE MAINTENANCE FACILITY	1,088	
WATER DISTRIBUTION SYSTEM	1,410	
CAMP PENDLETON MARINE CORPS BASE		27,584
CHINA LAKE NAVAL AIR WARFARE CTR WPNS DIV		
INDUSTRL WSTWTR COLLECT & TRTMT FAC(DBOF)	3,700	
CHINA LAKE NAVAL AIR WARFARE CTR WPNS DIV		3,700
LEMOORE NAVAL AIR STATION		
JET ENGINE TEST CELL	7,600	
LEMOORE NAVAL AIR STATION		7,600
NORTH ISLAND NAVAL AIR STATION		
BERTHING WHARF	58,670	
CONTROLLED INDUSTRIAL FACILITY	42,500	
NORTH ISLAND NAVAL AIR STATION		101,170
PT MUGU NAVAL AIR WARFARE CTR WPNS DIV		
CHILD DEVELOPMENT CENTER (DBOF)	1,300	
PT MUGU NAVAL AIR WARFARE CTR WPNS DIV		1,300
SAN DIEGO NAVAL STATION		
OILY WASTE COLLECTION AND TREATMENT FAC	19,960	
SAN DIEGO NAVAL STATION		19,960
SAN DIEGO NAVCMDCTRL&OCEANSURVCTRDTEDIV		
TEST FACILITY DEMOLITION	3,170	
SAN DIEGO NAVCMDCTRL&OCEANSURVCTRDTEDIV		3,170
TWENTYNINE PALMS MARCORP AIR-GRND COMB CTR		
INFANTRY SQUAD BATTLE COURSE	2,490	
TWENTYNINE PALMS MARCORP AIR-GRND COMB CTR		2,490
**NAVY		166,974
AIR FORCE		
BEALE AFB		
LANDFILL CLOSURE	7,500	
BEALE AFB		7,500
EDWARDS AFB		
ADD TO AND ALTER ANECHOIC CHAMBER	11,100	
DORMITORY	10,600	
F-22 ADD TO AND ALTER ENGINEERING TEST FAC	12,100	
EDWARDS AFB		33,800
TRAVIS AFB		
DORMITORIES	10,500	

FY 1996 MILITARY CONSTRUCTION TOTAL OBLIGATIONAL AUTHORITY AS REQUESTED

ACTIVE, GUARD AND RESERVE FORCES DATA AS OF FEB 1995
INSIDE THE UNITED STATES
($ THOUSANDS)

STATE/COMP./INSTALLATION ----------PROJECT NAME----------	PROJ COST	TOTAL
CALIFORNIA		
AIR FORCE		
TRAVIS AFB		
DORMITORY	6,400	
HAZARDOUS WASTE STORAGE FACILITY (DBOF)		
(MEMO-NON-ADD)	(600)	
KC-10 ADD TO FLIGHT SIMULATOR FACILITY	2,400	
SQUADRON OPERATIONS/AIRCRAFT MAINTENANCE U	7,400	
TRAVIS AFB		26,700
(MEMO-NON-ADD)		(600)
VANDENBERG AFB		
FIRE STATION	2,000	
SLFI - CHEMICAL TEST AND ANALYSIS LABORATO	4,000	
VANDENBERG AFB		6,000
**AIR FORCE		74,000
(MEMO-NON-ADD)		(600)
SPECIAL OPERATIONS COMMAND		
NAVAL AIR STATION MIRAMAR		
TRAINING COURSE COMPLEX	5,200	
NAVAL AIR STATION MIRAMAR		5,200
DEFENSE LOGISTICS AGENCY		
DEF DISTRIBUTION STOCKTON - DDJC		
GENERAL PURPOSE WHSE REPLACEMENT (DBOF)	15,000	
DEF DISTRIBUTION STOCKTON - DDJC		15,000
DFSC POINT MUGU		
FUEL STORAGE (DBOF)	750	
DFSC POINT MUGU		750
**DEFENSE LOGISTICS AGENCY		15,750
DEFENSE MEDICAL SUPPORT ACTIVITY		
CAMP PENDLETON MARINE CORPS BASE		
ENVIRONMENTAL HEALTH/INDUSTIAL HYGIENE	1,700	
CAMP PENDLETON MARINE CORPS BASE		1,700
FORT IRWIN		
AMBULATORY HEALTHCARE CLINIC	6,900	
FORT IRWIN		6,900
VANDENBERG AIR FORCE BASE		
LIFE SAFETY/SEISMIC/UTILITY UPGRADE	5,700	
VANDENBERG AIR FORCE BASE		5,700
**DEFENSE MEDICAL SUPPORT ACTIVITY		14,300
AIR NATIONAL GUARD		
SEPULVEDA ANG ANNEX		
REPLACE UNDERGROUND FUEL STORAGE TANKS	320	
SEPULVEDA ANG ANNEX		320
ARMY RESERVE		
CAMP PARKS		
BATTLE PROJECTION CENTER	5,868	
CAMP PARKS		5,868
AIR FORCE RESERVE		
MARCH AFB		
FIRE TRAINING FACILITY	1,550	
MARCH AFB		1,550
FAMILY HOUSING		
NAVY		
LEMOORE NAVAL AIR STATION		
240 UNITS REPLACEMENT	(34,900)	
LEMOORE NAVAL AIR STATION		
FAMILY HOUSING		(34,900)

FY 1996 MILITARY CONSTRUCTION TOTAL OBLIGATIONAL AUTHORITY AS REQUESTED

ACTIVE, GUARD AND RESERVE FORCES
INSIDE THE UNITED STATES
($ THOUSANDS)

DATA AS OF FEB 1995

STATE/COMP./INSTALLATION ----------PROJECT NAME----------	PROJ COST	TOTAL
CALIFORNIA		
NAVY		
MARINE CORPS BASE CAMP PENDLETON		
COMMUNITY CENTER	(1,438)	
HOUSING OFFICE	(707)	
69 UNITS NEW CONSTRUCTION	(10,000)	
MARINE CORPS BASE CAMP PENDLETON FAMILY HOUSING		(12,145)
PACIFIC MISSILE TEST CENTER POINT MUGU		
HOUSING OFFICE/SELF HELP (NEW CONST)	(1,020)	
PACIFIC MISSILE TEST CENTER POINT MUGU FAMILY HOUSING		(1,020)
PUBLIC WORKS CENTER SAN DIEGO		
346 UNITS REPLACEMENT	(49,310)	
PUBLIC WORKS CENTER SAN DIEGO FAMILY HOUSING		(49,310)
**NAVY FAMILY HOUSING		(97,375)
AIR FORCE		
BEALE AFB		
CONSTRUCT FAMILY HOUSING MANAGEMENT OFFICE	(842)	
BEALE AFB FAMILY HOUSING		(842)
EDWARDS AFB		
REPLACE 67 MILITARY FAMILY HOUSING UNITS	(11,350)	
EDWARDS AFB FAMILY HOUSING		(11,350)
VANDENBERG AFB		
FAMILY HOUSING MANAGEMENT OFFICE	(900)	
REPLACE 143 MILITARY FAMILY HOUSING UNITS	(20,200)	
VANDENBERG AFB FAMILY HOUSING		(21,100)
**AIR FORCE FAMILY HOUSING		(33,292)
**CALIFORNIA		302,462
(MEMO-NON-ADD)		(600)
FAMILY HOUSING		(130,667)
COLORADO		
ARMY		
FORT CARSON		
SANITARY SEWER SYSTEM	1,750	
SEWAGE TREATMENT PLANT	9,100	
FORT CARSON		10,850
AIR FORCE		
BUCKLEY ANG BASE		
TROOP SUPPORT FACILITIES	5,500	
BUCKLEY ANG BASE		5,500
PETERSON AFB		
ADD TO AND ALTER DORMITORY	3,000	
FIRE STATION	1,390	
PETERSON AFB		4,390
US AIR FORCE ACADEMY		
CHILD DEVELOPMENT CENTER	4,200	

FY 1996 MILITARY CONSTRUCTION TOTAL OBLIGATIONAL AUTHORITY AS REQUESTED

ACTIVE, GUARD AND RESERVE FORCES INSIDE THE UNITED STATES ($ THOUSANDS) — DATA AS OF FEB 1995

STATE/COMP./INSTALLATION ----------PROJECT NAME----------	PROJ COST	TOTAL
COLORADO		
AIR FORCE		
US AIR FORCE ACADEMY		
SAILPLANE HANGAR	3,724	
UPGRADE FACILITIES HEATING SYSTEM	4,950	
US AIR FORCE ACADEMY		12,874
**AIR FORCE		22,764
AIR NATIONAL GUARD		
BUCKLEY ANGB		
BASE ENGINEER PAVEMENTS & GROUNDS FACILIT	450	
UPGRADE HEATING SYSTEMS	950	
BUCKLEY ANGB		1,400
FAMILY HOUSING		
AIR FORCE		
PETERSON AFB		
FAMILY HOUSING OFFICE	(570)	
PETERSON AFB		
FAMILY HOUSING		(570)
**COLORADO		35,014
FAMILY HOUSING		(570)
DELAWARE		
AIR FORCE		
DOVER AFB		
C-5 SQD OPERATIONS/ACFT MAINT (DBOF)	5,500	
DOVER AFB		5,500
DEFENSE LOGISTICS AGENCY		
DFSC DOVER AFB		
REPLACE HYDRANT FUEL SYSTEM (DBOF)	15,554	
DFSC DOVER AFB		15,554
DEFENSE MEDICAL SUPPORT ACTIVITY		
DOVER AIR FORCE BASE		
LIFE SAFETY UPGRADE	4,400	
DOVER AIR FORCE BASE		4,400
**DELAWARE		25,454
DISTRICT OF COLUMBIA		
ARMY		
FORT LESLEY J MCNAIR		
NATIONAL DEFENSE UNIVERSITY FACILITY	8,000	
WHOLE BARRACK COMPLEX RENEWAL	5,500	
FORT LESLEY J MCNAIR		13,500
AIR FORCE		
BOLLING AIR FORCE BASE		
ALTER DORMITORY	6,500	
HONOR GUARD DORMITORY	5,600	
BOLLING AIR FORCE BASE		12,100
DEF INTELLIGENCE AGENCY		
BOLLING AFB		
BOILER DIAC	498	
PARKING DIAC	1,245	
BOLLING AFB		1,743
FAMILY HOUSING		
AIR FORCE		
BOLLING AFB		
REPLACE 32 MILITARY FAMILY HOUSING UNITS	(4,100)	
BOLLING AFB		
FAMILY HOUSING		(4,100)
**DISTRICT OF COLUMBIA		27,343
FAMILY HOUSING		(4,100)

FY 1996 MILITARY CONSTRUCTION TOTAL OBLIGATIONAL AUTHORITY AS REQUESTED

ACTIVE, GUARD AND RESERVE FORCES INSIDE THE UNITED STATES ($ THOUSANDS) — DATA AS OF FEB 1995

STATE/COMP./INSTALLATION ----------PROJECT NAME----------	PROJ COST	TOTAL
FLORIDA		
NAVY		
EGLIN AFB NAVSCH EXPL ORDNANCE DISP DET		
EXPLOSIVE ORDNANCE DISPOSAL TRNG COMPLEX	14,200	
UNDERWATER ORDNANCE DISPOSAL TRNG FAC	1,950	
EGLIN AFB NAVSCH EXPL ORDNANCE DISP DET		16,150
PENSACOLA NAVAL TECHNICAL TRAINING CENTER		
CHILD DEVELOPMENT CENTER	2,565	
PENSACOLA NAVAL TECHNICAL TRAINING CENTER		2,565
**NAVY		18,715
AIR FORCE		
CAPE CANAVERAL AFS		
FIRE TRAINING FACILITY	1,600	
CAPE CANAVERAL AFS		1,600
EGLIN AFB		
REPAIR RUNWAY	6,200	
EGLIN AFB		6,200
TYNDALL AFB		
FIRE TRAINING FACILITY	1,200	
TYNDALL AFB		1,200
**AIR FORCE		9,000
SPECIAL OPERATIONS COMMAND		
DUKE FIELD		
SQ OPERATIONS/AMU	2,400	
DUKE FIELD		2,400
EGLIN AUX FIELD 9		
BENSON TANK STORAGE/MX FACILITY	1,550	
SOF HELICOPTER HANGAR (2)	5,500	
SOF SQUADRON OPS/AMU MH-53	7,100	
EGLIN AUX FIELD 9		14,150
**SPECIAL OPERATIONS COMMAND		16,550
DEFENSE LOGISTICS AGENCY		
DFSC EGLIN AFB		
SOF FUEL STORAGE (DBOF)	2,400	
DFSC EGLIN AFB		2,400
FAMILY HOUSING		
AIR FORCE		
EGLIN AFB		
CONSTRUCT FAMILY HOUSING MANAGEMENT FAC	(500)	
FAMILY HOUSING OFFICE & MAINT FACILITY	(880)	
EGLIN AFB		
FAMILY HOUSING		(1,380)
MACDILL AFB		
CONSTRUCT HOUSING OFFICE	(646)	
MACDILL AFB		
FAMILY HOUSING		(646)
PATRICK AFB		
REPLACE 70 MILITARY FAMILY HOUSING UNITS,	(7,947)	
PATRICK AFB		
FAMILY HOUSING		(7,947)
TYNDALL AFB		
REPLACE 52 MILITARY FAMILY HOUSING UNITS	(5,500)	
TYNDALL AFB		
FAMILY HOUSING		(5,500)
**AIR FORCE		
FAMILY HOUSING		(15,473)
**FLORIDA		46,665
FAMILY HOUSING		(15,473)

FY 1996 MILITARY CONSTRUCTION TOTAL OBLIGATIONAL AUTHORITY AS REQUESTED

ACTIVE, GUARD AND RESERVE FORCES INSIDE THE UNITED STATES ($ THOUSANDS)

DATA AS OF FEB 1995

STATE/COMP./INSTALLATION ----------PROJECT NAME----------	PROJ COST	TOTAL
GEORGIA		
ARMY		
FORT BENNING		
CLOSE COMBAT TACTICAL TRAINER BUILDING	4,900	
WHOLE BARRACKS COMPLEX RENEWAL	33,000	
FORT BENNING		37,900
FORT GORDON		
BATTALION HEADQUARTERS	3,150	
GENERAL PURPOSE WAREHOUSE	2,600	
FORT GORDON		5,750
FT STEWART/HUNTER AAF		
DEPLOYMENT STAGING AREA	8,400	
FT STEWART/HUNTER AAF		8,400
**ARMY		52,050
NAVY		
KINGS BAY STRATEGIC WEAPONS FAC, ATLANTIC		
SECURITY FORCE FACILITY	2,450	
KINGS BAY STRATEGIC WEAPONS FAC, ATLANTIC		2,450
AIR FORCE		
MOODY AFB		
C-130 AERIAL DELIVERY FACILITY	4,600	
C-130 AIRCRAFT WASHRACK FACILITY	1,700	
C-130 SQUADRON OPERATIONS/ AIRCRAFT MAINTE	3,200	
CONTROL TOWER	2,700	
UPGRADE STORM DRAINAGE SYSTEM	690	
MOODY AFB		12,890
ROBINS AFB		
JSTARS AIRCRAFT FUEL SYSTEM MAINTENANCE DO	6,900	
ROBINS AFB		6,900
**AIR FORCE		19,790
DOD DEPENDENT SCHOOLS		
FORT BENNING		
FAITH MIDDLE SCHOOL ADDITION	1,116	
FORT BENNING		1,116
DEFENSE MEDICAL SUPPORT ACTIVITY		
FORT BENNING		
LIFE SAFETY UPGRADE	5,600	
FORT BENNING		5,600
AIR NATIONAL GUARD		
GLYNNCO AIR NATIONAL GUARD STATION		
REPLACE UNDERGROUND FUEL STORAGE TANKS	320	
GLYNNCO AIR NATIONAL GUARD STATION		320
HUNTER ANG SITE		
REPLACE UNDERGROUND FUEL STORAGE TANKS	400	
HUNTER ANG SITE		400
SAVANNAH MAP		
ALTER AIRCRAFT MAINTENANCE SHOPS	1,300	
SAVANNAH MAP		1,300
**AIR NATIONAL GUARD		2,020
FAMILY HOUSING		
AIR FORCE		
MOODY AFB		
REPLACE 1 SR OFF QTRS/1 GEN OFF QTRS, CON	(513)	
MOODY AFB		
FAMILY HOUSING		(513)
**GEORGIA		83,026
FAMILY HOUSING		(513)

FY 1996 MILITARY CONSTRUCTION TOTAL OBLIGATIONAL AUTHORITY AS REQUESTED

ACTIVE, GUARD AND RESERVE FORCES INSIDE THE UNITED STATES ($ THOUSANDS)

DATA AS OF FEB 1995

STATE/COMP./INSTALLATION ----------PROJECT NAME----------	PROJ COST	TOTAL
HAWAII		
NAVY		
HONOLULU COMP&TELCOMM AREA MASTER STA EPAC		
FIRE PROTECTION SYSTEM	1,980	
HONOLULU COMP&TELCOMM AREA MASTER STA EPAC		1,980
PEARL HARBOR INTELLIGENCE CENTER PACIFIC		
OPERATIONS BUILDING ALTERATIONS	2,200	
PEARL HARBOR INTELLIGENCE CENTER PACIFIC		2,200
PEARL HARBOR NAVAL SUBMARINE BASE		
BERTHING PIER	22,500	
PEARL HARBOR NAVAL SUBMARINE BASE		22,500
**NAVY		26,680
AIR FORCE		
HICKAM AFB		
ALTER DORMITORY	3,100	
ALTER TRANSIENT DORMITORY	3,050	
REPAIR AIRFIELD PAVEMENTS	4,550	
HICKAM AFB		10,700
FAMILY HOUSING		
NAVY		
NAVAL COMPLEX, OAHU		
252 UNITS REPLACEMENT	(48,400)	
NAVAL COMPLEX, OAHU FAMILY HOUSING		(48,400)
**HAWAII		37,380
FAMILY HOUSING		(48,400)
IDAHO		
AIR FORCE		
MOUNTAIN HOME AFB		
IDAHO TRAINING RANGE (NORTH SITE)	8,000	
UPGRADE STORM DRAINAGE SYSTEM	800	
WASTEWATER TREATMENT AND DISPOSAL PLANT	9,850	
MOUNTAIN HOME AFB		18,650
AIR NATIONAL GUARD		
GOWEN FIELD		
REMOVE UNDERGROUND FUEL STORAGE TANKS	320	
GOWEN FIELD		320
FAMILY HOUSING		
AIR FORCE		
MOUNTAIN HOME AFB		
CONSTRUCT HOUSING MANAGEMENT FACILITY	(844)	
MOUNTAIN HOME AFB FAMILY HOUSING		(844)
**IDAHO		18,970
FAMILY HOUSING		(844)
ILLINOIS		
NAVY		
GREAT LAKES NAVAL TRAINING CENTER		
UNIFORM ISSUE BUILDING	12,440	
GREAT LAKES NAVAL TRAINING CENTER		12,440
AIR FORCE		
SCOTT AFB		
DORMITORY	8,000	

FY 1996 MILITARY CONSTRUCTION TOTAL OBLIGATIONAL AUTHORITY AS REQUESTED

ACTIVE, GUARD AND RESERVE FORCES INSIDE THE UNITED STATES ($ THOUSANDS)

DATA AS OF FEB 1995

STATE/COMP./INSTALLATION ----------PROJECT NAME----------	PROJ COST	TOTAL
ILLINOIS		
AIR FORCE		
SCOTT AFB		
GLOBAL REACH PLANNING CENTER VISITING QUAR	4,700	
SCOTT AFB		12,700
ARMY NATIONAL GUARD		
MARSEILLES		
TRNG SITE, UTIL UPGRADE	1,350	
MARSEILLES		1,350
AIR NATIONAL GUARD		
GREATER PEORIA AIRPORT		
ADD TO AIRCRAFT MAINTENANCE HANGAR	1,200	
ADD TO AIRCRAFT PARKING APRON	630	
ADD TO AND ALTER SQUADRON OPERS FACILITY	970	
AIRCRAFT DEICING FACILITY	400	
ALTER AERIAL PORT TRAINING FACILITY	710	
ALTER AIRCRAFT MAINTENANCE SHOPS	1,450	
GREATER PEORIA AIRPORT		5,360
ARMY RESERVE		
ARLINGTON HEIGHTS		
BATTLE PROJECTION CENTER	4,860	
ARLINGTON HEIGHTS		4,860
FORT SHERIDAN		
ADD/ALT RTS-INTELL	3,300	
FORT SHERIDAN		3,300
**ARMY RESERVE		8,160
**ILLINOIS		40,010
INDIANA		
AIR FORCE RESERVE		
GRISSOM AFB		
FIRE TRAINING FACILITY	1,500	
GRISSOM AFB		1,500
KANSAS		
AIR FORCE		
MCCONNELL AFB		
ALTER DORMITORY	2,200	
DEICING PAD	1,150	
KC-135 SQUADRON OPERATIONS/ACFT MAINTEN.	6,100	
MCCONNELL AFB		9,450
ARMY NATIONAL GUARD		
FORT LEAVENWORTH		
CORPS SIM CENTER, PH II	4,400	
FORT LEAVENWORTH		4,400
AIR NATIONAL GUARD		
MCCONNELL AFB		
ALTER B-1 SQUADRON OPERATIONS FACILITY	800	
MCCONNELL AFB		800
ARMY RESERVE		
OLATHE		
LAND ACQUISITION	539	
OLATHE		539
TOPEKA		
USARC/OMS/AMSA	6,487	
TOPEKA		6,487
**ARMY RESERVE		7,026

FY 1996 MILITARY CONSTRUCTION TOTAL OBLIGATIONAL AUTHORITY AS REQUESTED

ACTIVE, GUARD AND RESERVE FORCES INSIDE THE UNITED STATES ($ THOUSANDS)

DATA AS OF FEB 1995

STATE/COMP./INSTALLATION ----------PROJECT NAME----------	PROJ COST	TOTAL
KANSAS		
FAMILY HOUSING		
AIR FORCE		
MCCONNELL AFB		
REPLACE 39 HOUSING UNITS	(5,193)	
MCCONNELL AFB		
FAMILY HOUSING		(5,193)
**KANSAS		21,676
FAMILY HOUSING		(5,193)
KENTUCKY		
ARMY		
FORT KNOX		
CLOSE COMBAT TACTICAL TRAINER BUILDING	5,600	
FORT KNOX		5,600
LOUISIANA		
AIR FORCE		
BARKSDALE AFB		
B-52 TRAINING COMPLEX	2,500	
BARKSDALE AFB		2,500
DEFENSE LOGISTICS AGENCY		
DFSC BARKSDALE AFB		
REPLACE HYDRANT FUEL SYSTEM (DBOF)	13,100	
DFSC BARKSDALE AFB		13,100
DEFENSE MEDICAL SUPPORT ACTIVITY		
BARKSDALE AIR FORCE BASE		
LIFE SAFETY UPGRADE	4,100	
BARKSDALE AIR FORCE BASE		4,100
FAMILY HOUSING		
AIR FORCE		
BARKSDALE AFB		
REPLACE 62 MILITARY FAMILY HOUSING UNITS.	(10,299)	
BARKSDALE AFB		
FAMILY HOUSING		(10,299)
**LOUISIANA		19,700
FAMILY HOUSING		(10,299)
MARYLAND		
NAVY		
ANNAPOLIS NAVAL STATION		
BACHELOR ENLISTED QUARTERS	3,600	
ANNAPOLIS NAVAL STATION		3,600
AIR FORCE		
ANDREWS AFB		
DORMITORY	6,000	
UNDERGROUND FUEL STORAGE TANKS	6,886	
ANDREWS AFB		12,886
NATIONAL SECURITY AGENCY		
FORT MEADE		
CRITICAL UTILITIES CONTROL, PHASE I	3,301	
FANX II PURCHASE	14,800	
SPL STEAM GENERATION PLANT	632	
FORT MEADE		18,733
DEFENSE MEDICAL SUPPORT ACTIVITY		
BETHESDA NAVAL HOSPITAL		
POTABLE WATER LINE REPLACEMENT	1,300	
BETHESDA NAVAL HOSPITAL		1,300

FY 1996 MILITARY CONSTRUCTION TOTAL OBLIGATIONAL AUTHORITY AS REQUESTED

ACTIVE, GUARD AND RESERVE FORCES INSIDE THE UNITED STATES ($ THOUSANDS)

DATA AS OF FEB 1995

STATE/COMP./INSTALLATION ----------PROJECT NAME----------	PROJ COST	TOTAL
MARYLAND		
DEFENSE MEDICAL SUPPORT ACTIVITY		
FOREST GLEN (WRAIR)		
ARMED FORCES INST OF PATH REPOSITORY ADD	1,550	
#ARMY INSTITUTE OF RESEARCH PHASE III	119,000	
FOREST GLEN (WRAIR)		120,550
AUTHORIZED IN PRIOR YEAR		(119,000)
**DEFENSE MEDICAL SUPPORT ACTIVITY		121,850
AUTHORIZED IN PRIOR YEAR		(119,000)
FAMILY HOUSING		
NAVY		
NAVAL AIR TEST CENTER PATUXENT RIVER		
WAREHOUSE/SELF HELP (NEW CONST)	{890}	
NAVAL AIR TEST CENTER PATUXENT RIVER		
FAMILY HOUSING		{890}
USNA ANNAPOLIS MD		
HOUSING OFFICE/SELF HELP (NEW CONST)	{800}	
USNA ANNAPOLIS MD		
FAMILY HOUSING		{800}
**NAVY		
FAMILY HOUSING		{1,690}
**MARYLAND		157,069
AUTHORIZED IN PRIOR YEAR		(119,000)
FAMILY HOUSING		{1,690}
MASSACHUSETTS		
AIR NATIONAL GUARD		
BARNES MAP		
VEHICLE MAINTENANCE COMPLEX	2,000	
BARNES MAP		2,000
WORCESTER ANGS		
PAINT AND REFUELING VEHICLES MAINT BAYS	350	
WORCESTER ANGS		350
**AIR NATIONAL GUARD		2,350
NAVY RESERVE		
MCRC CAMP EDWARDS		
RESCEN/COMBAT VEH. MAINT. FAC. ADDN.	2,120	
MCRC CAMP EDWARDS		2,120
**MASSACHUSETTS		4,470
MICHIGAN		
AIR NATIONAL GUARD		
SELFRIDGE ANGB		
UPGRADE HEATING SYSTEMS	2,900	
SELFRIDGE ANGB		2,900
MINNESOTA		
AIR NATIONAL GUARD		
MINN-ST PAUL IAP		
AIRCRAFT DEICING FACILITY	400	
UPGRADE HEATING SYSTEM	780	
MINN-ST PAUL IAP		1,180
MISSISSIPPI		
AIR FORCE		
COLUMBUS AFB		
FIRE TRAINING FACILITY	1,150	
COLUMBUS AFB		1,150

AUTHORIZED IN PRIOR YEAR

FY 1996 MILITARY CONSTRUCTION TOTAL OBLIGATIONAL AUTHORITY AS REQUESTEI

ACTIVE, GUARD AND RESERVE FORCES
INSIDE THE UNITED STATES
($ THOUSANDS)

DATA AS OF FEB 1995

STATE/COMP./INSTALLATION ----------PROJECT NAME----------	PROJ COST	TOTAL
MISSISSIPPI		
AIR FORCE		
KEESLER AFB		
UPGRADE STUDENT DORMITORY	6,500	
KEESLER AFB		6,500
**AIR FORCE		7,650
ARMY NATIONAL GUARD		
GULFPORT		
AVCRAD EETF	1,100	
GULFPORT		1,100
FAMILY HOUSING		
AIR FORCE		
KEESLER AFB		
REPLACE 98 MILITARY FAMILY HOUSING UNITS	(9,300)	
KEESLER AFB		
FAMILY HOUSING		(9,300)
**MISSISSIPPI		8,750
FAMILY HOUSING		(9,300)
MISSOURI		
AIR FORCE		
WHITEMAN AFB		
B-2 ADD TO ACFT APRON/CONVOY ROAD/TAXIWAY	1,500	
B-2 ADD TO AND ALTER DOCK FIRE PROTECTION	3,500	
B-2 ADD TO FLIGHT SIMULATOR TRAINING FACIL	4,100	
B-2 AIRCRAFT MAINTENANCE DOCKS/HYDRANT FUE	15,500	
WHITEMAN AFB		24,600
DEFENSE MAPPING AGENCY		
DMA AEROSPACE CENTER		
REPLACE DESTROYED/DAMAGED FAC W/LAND ACQ	40,300	
DMA AEROSPACE CENTER		40,300
FAMILY HOUSING		
AIR FORCE		
WHITEMAN AFB		
CONSTRUCT 72 MILITARY FAMILY HOUSING UNITS	(9,948)	
WHITEMAN AFB		
FAMILY HOUSING		(9,948)
**MISSOURI		64,900
FAMILY HOUSING		(9,948)
NEVADA		
AIR FORCE		
NELLIS AFB		
UPGRADE STORM DRAINAGE SYSTEM	600	
VISITING QUARTERS	9,900	
NELLIS AFB		10,500
FAMILY HOUSING		
AIR FORCE		
NELLIS AFB		
REPLACE 6 SENIOR OFFICERS HOUSING	(1,357)	
NELLIS AFB		
FAMILY HOUSING		(1,357)
**NEVADA		10,500
FAMILY HOUSING		(1,357)

FY 1996 MILITARY CONSTRUCTION TOTAL OBLIGATIONAL AUTHORITY AS REQUESTED

ACTIVE, GUARD AND RESERVE FORCES DATA AS OF FEB 1995
INSIDE THE UNITED STATES
($ THOUSANDS)

STATE/COMP./INSTALLATION ----------PROJECT NAME----------	PROJ COST	TOTAL
NEW JERSEY		
NAVY		
LAKEHURST NAVAIRWARFARE CTR AIRCRAFT DIV		
CHILD DEVELOPMENT CENTER (DBOF)	1,700	
LAKEHURST NAVAIRWARFARE CTR AIRCRAFT DIV		1,700
AIR FORCE		
MCGUIRE AFB		
FIRE TRAINING FACILITY	1,600	
KC-10 SQUADRON OPERATIONS/ AIRCRAFT MAINTE	7,600	
MCGUIRE AFB		9,200
DEFENSE LOGISTICS AGENCY		
DFSC MCGUIRE AFB		
REPLACE HYDRANT FUEL SYSTEM (DBOF)	12,000	
DFSC MCGUIRE AFB		12,000
AIR NATIONAL GUARD		
ATLANTIC CITY		
UPGRADE SANITARY AND WATER SYSTEM	650	
ATLANTIC CITY		650
MCGUIRE AFB		
FUEL CELL AND CORROSION CONTROL FACILITY	5,700	
MCGUIRE AFB		5,700
WARREN GROVE RANGE		
COMPOSITE RANGE OPERATIONS FACILITY	1,100	
WARREN GROVE RANGE		1,100
**AIR NATIONAL GUARD		7,450
**NEW JERSEY		30,350
NEW MEXICO		
AIR FORCE		
CANNON AFB		
UPGRADE STORM DRAINAGE SYSTEM	620	
WASTEWATER TREATMENT AND DISPOSAL PLANT	9,800	
CANNON AFB		10,420
KIRTLAND AFB		
UPGRADE ELECTRICAL DISTRIBUTION SYSTEM	7,656	
UPGRADE STORM DRAINAGE SYSTEM	1,500	
KIRTLAND AFB		9,156
**AIR FORCE		19,576
AIR NATIONAL GUARD		
KIRTLAND AFB		
AIRCRAFT CORROSION CONTROL FACILITY	1,800	
ALTER AIRCRAFT MAINT HANGAR AND SHOPS	900	
COMPOSITE ENGINE AND NDI SHOP	2,700	
LANTIRN MAINTENANCE FACILITY	620	
KIRTLAND AFB		6,020
FAMILY HOUSING		
AIR FORCE		
HOLLOMAN AFB		
REPLACE 1 GENERAL OFFICER'S HOUSING	(225)	
HOLLOMAN AFB		
FAMILY HOUSING		(225)
KIRTLAND AFB		
REPLACE 105 FAMILY HOUSING UNITS, PHASE 2	(11,000)	
KIRTLAND AFB		
FAMILY HOUSING		(11,000)
**AIR FORCE		
FAMILY HOUSING		(11,225)
**NEW MEXICO		25,596
FAMILY HOUSING		(11,225)

FY 1996 MILITARY CONSTRUCTION TOTAL OBLIGATIONAL AUTHORITY AS REQUESTED

ACTIVE, GUARD AND RESERVE FORCES INSIDE THE UNITED STATES ($ THOUSANDS) — DATA AS OF FEB 1995

STATE/COMP./INSTALLATION PROJECT NAME	PROJ COST	TOTAL
NEW YORK		
ARMY		
WATERVLIET ARSENAL		
OIL RUNOFF CONTAINMENT FACILITY (DBOF)	680	
WATERVLIET ARSENAL		680
AIR NATIONAL GUARD		
HANCOCK FIELD		
COMPOSITE MEDICAL TRAINING FACILITY	1,990	
HANCOCK FIELD		1,990
NIAGARA FALLS IAP		
UPGRADE RUNWAY OVERRUN	1,950	
UPGRADE STORM WATER & SANITARY SEWER SYS	400	
NIAGARA FALLS IAP		2,350
**AIR NATIONAL GUARD		4,340
NAVY RESERVE		
NAVMARCORESCEN BUFFALO		
RESCEN/MIUW ADDITION	2,826	
NAVMARCORESCEN BUFFALO		2,826
AIR FORCE RESERVE		
NIAGARA FALLS IAP		
FUEL SYSTEM MAINTENANCE HANGAR	4,895	
NIAGARA FALLS IAP		4,895
FAMILY HOUSING		
ARMY		
U S MILITARY ACADEMY		
FAMILY HOUSING REPLACEMENT CONST (119)	(16,500)	
U S MILITARY ACADEMY		
FAMILY HOUSING		(16,500)
**NEW YORK		12,741
FAMILY HOUSING		(16,500)
NORTH CAROLINA		
ARMY		
FORT BRAGG		
STAGING AREA COMPLEX	11,200	
WHOLE BARRACKS COMPLEX RENEWAL	18,500	
FORT BRAGG		29,700
NAVY		
CAMP LEJEUNE MARINE CORPS BASE		
BACHELOR ENLISTED QUARTERS	8,300	
INFANTRY PLATOON BATTLE COURSE	5,500	
WASTEWATER TREATMENT PLANT (PHASE II)	45,500	
CAMP LEJEUNE MARINE CORPS BASE		59,300
CHERRY POINT MARINE CORPS AIR STATION		
ENCLOSE WATER SURVIVAL TRAINING TANK	2,050	
JET ENGINE TEST CELL	7,730	
MISSILE MAGAZINE	1,650	
CHERRY POINT MARINE CORPS AIR STATION		11,430
NEW RIVER MARINE CORPS AIR STATION		
BACHELOR ENLISTED QUARTERS	14,650	
NEW RIVER MARINE CORPS AIR STATION		14,650
**NAVY		85,380
AIR FORCE		
POPE AFB		
C-130 SQUADRON OPS/AMU AND AUDIOVISUAL SER	6,100	

FY 1996 MILITARY CONSTRUCTION TOTAL OBLIGATIONAL AUTHORITY AS REQUESTED

ACTIVE, GUARD AND RESERVE FORCES INSIDE THE UNITED STATES ($ THOUSANDS)

DATA AS OF FEB 1995

STATE/COMP./INSTALLATION ----------PROJECT NAME----------	PROJ COST	TOTAL
NORTH CAROLINA		
AIR FORCE		
POPE AFB		
UNDERGROUND FUEL STORAGE TANKS	2,150	
POPE AFB		8,250
SEYMOUR JOHNSON AFB		
UPGRADE STORM DRAINAGE SYSTEM	830	
SEYMOUR JOHNSON AFB		830
**AIR FORCE		9,080
SPECIAL OPERATIONS COMMAND		
FORT BRAGG		
GROUP HEADQUARTERS BLDG	2,600	
FORT BRAGG		2,600
ARMY RESERVE		
HICKORY		
USARC	2,713	
HICKORY		2,713
FAMILY HOUSING		
NAVY		
MARINE CORPS AIR STATION CHERRY POINT NC		
COMMUNITY CENTER	(1,003)	
MARINE CORPS AIR STATION CHERRY POINT NC		
FAMILY HOUSING		(1,003)
AIR FORCE		
POPE AFB		
CONSTRUCT 104 MILITARY FAMILY HOUSING UNIT	(9,984)	
POPE AFB		
FAMILY HOUSING		(9,984)
SEYMOUR JOHNSON AFB		
REPLACE 1 GENERAL OFFICERS QUARTERS	(204)	
SEYMOUR JOHNSON AFB		
FAMILY HOUSING		(204)
**AIR FORCE		
FAMILY HOUSING		(10,188)
**NORTH CAROLINA		129,473
FAMILY HOUSING		(11,191)
NORTH DAKOTA		
AIR FORCE		
GRAND FORKS AFB		
DORMITORY	8,500	
KC-135 SQUADRON OPERATIONS/ACFT MAINTEN.	6,300	
GRAND FORKS AFB		14,800
MINOT AFB		
UNDERGROUND FUEL STORAGE TANKS	1,550	
MINOT AFB		1,550
**AIR FORCE		16,350
OHIO		
AIR FORCE		
WRIGHT-PATTERSON AFB		
UPGRADE ELECTRICAL DISTRIBUTION SYSTEM	4,100	
WRIGHT-PATTERSON AFB		4,100

FY 1996 MILITARY CONSTRUCTION TOTAL OBLIGATIONAL AUTHORITY AS REQUESTED

ACTIVE, GUARD AND RESERVE FORCES INSIDE THE UNITED STATES ($ THOUSANDS)

DATA AS OF FEB 1995

STATE/COMP./INSTALLATION ----------PROJECT NAME----------	PROJ COST	TOTAL
OHIO		
DEFENSE FINANCE AND ACCOUNTING SERVICE		
COLUMBUS CENTER		
CONSTRUCT A MULTISTORY ADMIN FAC (DBOF)	72,403	
COLUMBUS CENTER		72,403
AIR NATIONAL GUARD		
BLUE ASH ANG STATION		
REPLACE UNDERGROUND FUEL STORAGE TANKS	380	
BLUE ASH ANG STATION		380
CAMP PERRY		
REPLACE UNDERGROUND FUEL STORAGE TANKS	320	
CAMP PERRY		320
RICKENBACKER ANGB		
REPLACE UNDERGROUND FUEL STORAGE TANKS	310	
RICKENBACKER ANGB		310
**AIR NATIONAL GUARD		1,010
AIR FORCE RESERVE		
YOUNGSTOWN MAP		
ADD TO ALTER ELECTRIC SUBSTATION	4,230	
CONSTRUCT AIRCRAFT PARKING APRON	3,350	
UPGRADE BASE WATER DISTRIBUTION SYSTEM	1,000	
YOUNGSTOWN MAP		8,580
**OHIO		86,093
OKLAHOMA		
ARMY		
FORT SILL		
CENTRAL VEHICLE WASH FACILITY	6,300	
FORT SILL		6,300
AIR FORCE		
ALTUS AFB		
FIRE TRAINING FACILITY	1,200	
ALTUS AFB		1,200
TINKER AFB		
ADD TO AND ALTER DORMITORIES	5,100	
TINKER AFB		5,100
**AIR FORCE		6,300
ARMY NATIONAL GUARD		
LAWTON (FORT SILL)		
OMS/MLRS PH I	2,400	
LAWTON (FORT SILL)		2,400
AIR NATIONAL GUARD		
TULSA IAP		
COMPOSITE COMMUNICATIONS FACILITY	1,900	
TULSA IAP		1,900
WILL ROGERS WORLD AIRPORT		
AERIAL PORT TRAINING FACILITY	2,550	
COMPOSITE FIRE STATION	1,950	
PETROLEUM OPERATIONS FACILITY	400	
WILL ROGERS WORLD AIRPORT		4,900
**AIR NATIONAL GUARD		6,800
**OKLAHOMA		21,800

FY 1996 MILITARY CONSTRUCTION TOTAL OBLIGATIONAL AUTHORITY AS REQUESTED

ACTIVE, GUARD AND RESERVE FORCES
INSIDE THE UNITED STATES
($ THOUSANDS)

DATA AS OF FEB 1995

STATE/COMP./INSTALLATION ----------PROJECT NAME----------	PROJ COST	TOTAL
OREGON		
ARMY BUDGETED BY DOD		
UMATILLA DEPOT		
AMMUNITION DEMILITARIZATION FAC PHASE II	55,000	
UMATILLA DEPOT		55,000
PENNSYLVANIA		
SPECIAL OPERATIONS COMMAND		
OLMSTEAD FIELD, HARRISBURG IAP		
REFUELING VEHICLE SHOP	443	
SOF MOBILITY STORAGE WAREHOUSE	1,200	
OLMSTEAD FIELD, HARRISBURG IAP		1,643
DEFENSE LOGISTICS AGENCY		
DEF DISTRIBUTION NEW CUMBERLAND - DDSP		
TRANSPORT CONTROL FACILITY (DBOF)	4,600	
DEF DISTRIBUTION NEW CUMBERLAND - DDSP		4,600
AIR NATIONAL GUARD		
GREATER PITTSBURGH IAP		
FUEL SYSTEMS MAINTENANCE FACILITY	5,332	
GREATER PITTSBURGH IAP		5,332
FAMILY HOUSING		
NAVY		
NSCC MECHANICBURG PA		
HOUSING OFFICE (NEW CONSTR)	(300)	
NSCC MECHANICBURG PA		
FAMILY HOUSING		(300)

**PENNSYLVANIA		11,575
FAMILY HOUSING		(300)
SOUTH CAROLINA		
ARMY		
CHARLESTON NAVAL WEAPONS STATION		
ARMY STRATEGIC MAINT COMPLEX PH II (DBOF)	16,500	
WHARF ADDITIONS (DBOF)	9,200	
CHARLESTON NAVAL WEAPONS STATION		25,700
FORT JACKSON		
WHOLE BARRACK COMPLEX RENEWAL	32,000	
FORT JACKSON		32,000

**ARMY		57,700
AIR FORCE		
CHARLESTON AFB		
C-17 ADD TO FLIGHT SIMULATOR FACILITY	1,300	
C-17 SQUADRON OPERATIONS/ AIRCRAFT MAINTEN	5,600	
DORMITORY	5,600	
CHARLESTON AFB		12,500
SHAW AFB		
UPGRADE STORM DRAINAGE SYSTEM	1,300	
SHAW AFB		1,300

**AIR FORCE		13,800
DOD DEPENDENT SCHOOLS		
FT JACKSON		
PIERCE TERRACE ELEM SCHOOL ADDITION	576	
FT JACKSON		576

FY 1996 MILITARY CONSTRUCTION TOTAL OBLIGATIONAL AUTHORITY AS REQUESTED

ACTIVE, GUARD AND RESERVE FORCES DATA AS OF FEB 1995
INSIDE THE UNITED STATES
($ THOUSANDS)

STATE/COMP./INSTALLATION -----PROJECT NAME-----	PROJ COST	TOTAL
SOUTH CAROLINA		
FAMILY HOUSING		
AIR FORCE		
SHAW AFB		
HOUSING MAINTENANCE FACILITY	(715)	
SHAW AFB		
FAMILY HOUSING		(715)
**SOUTH CAROLINA		72,076
FAMILY HOUSING		(715)
SOUTH DAKOTA		
AIR NATIONAL GUARD		
JOE FOSS FIELD		
BASE SUPPLY COMPLEX	4,000	
JOE FOSS FIELD		4,000
TENNESSEE		
AIR FORCE		
ARNOLD ENGINEERING DEV CENTER		
UPGRADE ENGINE TEST FACILITIES REFRIGERATI	2,300	
UPGRADE FIRE PROTECTION SYSTEMS	2,700	
ARNOLD ENGINEERING DEV CENTER		5,000
AIR NATIONAL GUARD		
MCGHEE-TYSON AIRPORT		
PMEC SCHOOL TRAINING QUARTERS	4,400	
MCGHEE-TYSON AIRPORT		4,400
MEMPHIS IAP		
ADD TO & ALTER BASE ENGINEER MAINT CMPLX	990	
ADD TO & ALTER SECURITY POLICE OPS FAC	1,100	
MEMPHIS IAP		2,090
**AIR NATIONAL GUARD		6,490
**TENNESSEE		11,490
TEXAS		
ARMY		
FORT BLISS		
WHOLE BARRACK COMPLEX RENEWAL	48,000	
FORT BLISS		48,000
FORT HOOD		
WHOLE BARRACK CONPLEX RENEWAL	17,500	
FORT HOOD		17,500
**ARMY		65,500
AIR FORCE		
BROOKS AFB		
ADD TO AND ALTER COMMUNICATIONS FACILITY		
(MEMO-NON-ADD)	(233)	
BROOKS AFB		
(MEMO-NON-ADD)		(233)
KELLY AFB		
COMMUNICATIONS FACILITY		
(MEMO-NON-ADD)	(353)	
WING HEADQUARTERS FACILITY	3,244	
KELLY AFB		3,244
(MEMO-NON-ADD)		(353)

ACTIVE, GUARD AND RESERVE FORCES
INSIDE THE UNITED STATES
($ THOUSANDS)

DATA AS OF FEB 1995

STATE/COMP./INSTALLATION ----------PROJECT NAME----------	PROJ COST	TOTAL
TEXAS		
AIR FORCE		
LAUGHLIN AFB		
FIRE TRAINING FACILITY	1,400	
LAUGHLIN AFB		1,400
RANDOLPH AFB		
FIRE TRAINING FACILITY	1,200	
UPGRADE AIRFIELD LIGHTING	1,900	
RANDOLPH AFB		3,100
REESE AFB		
FIRE TRAINING FACILITY	1,200	
REESE AFB		1,200
SHEPPARD AFB		
UPGRADE AIRFIELD LIGHTING	1,500	
SHEPPARD AFB		1,500
**AIR FORCE		10,444
(MEMO-NON-ADD)		(586)
BALLISTIC MISSILE DEFENSE ORAGNIZATION		
FORT BLISS		
THAAD 1ST OBSV BN OTM FACILITIES	13,600	
FORT BLISS		13,600
DEFENSE MEDICAL SUPPORT ACTIVITY		
FORT HOOD		
CONSOLIDATED TROOP MEDICAL CLINIC	5,500	
FORT HOOD		5,500
LACKLAND AIR FORCE BASE		
EMERGENCY DEPARTMENT ADDITION/ALTERATION	6,100	
LACKLAND AIR FORCE BASE		6,100
REESE AIR FORCE BASE		
LIFE SAFETY/UTILITY UPGRADE	1,000	
REESE AIR FORCE BASE		1,000
**DEFENSE MEDICAL SUPPORT ACTIVITY		12,600
AIR NATIONAL GUARD		
KELLY AFB		
UPGRADE HEATING AND COOLING SYSTEMS	1,400	
KELLY AFB		1,400
FAMILY HOUSING		
AIR FORCE		
DYESS AFB		
CONSTRUCT HOUSING MAINTENANCE FACILITY	(580)	
REPLACE 150 MILITARY FAMILY HOUSING UNITS	(246)	
DYESS AFB		
FAMILY HOUSING		(826)
LACKLAND AFB		
REPLACE 67 MILITARY FAMILY HOUSING UNITS,	(6,200)	
LACKLAND AFB		
FAMILY HOUSING		(6,200)
SHEPPARD AFB		
CONSTRUCT MANAGEMENT OFFICE	(500)	
REPLACE FAMILY HOUSING MAINTENANCE FAC	(600)	
SHEPPARD AFB		
FAMILY HOUSING		(1,100)
**AIR FORCE		
FAMILY HOUSING		(8,126)
**TEXAS		103,544
(MEMO-NON-ADD)		(586)
FAMILY HOUSING		(8,126)

FY 1996 MILITARY CONSTRUCTION TOTAL OBLIGATIONAL AUTHORITY AS REQUESTED

ACTIVE, GUARD AND RESERVE FORCES INSIDE THE UNITED STATES ($ THOUSANDS)

DATA AS OF FEB 1995

STATE/COMP./INSTALLATION ----------PROJECT NAME----------	PROJ COST	TOTAL
UTAH		
ARMY NATIONAL GUARD		
CAMP WILLIAMS		
TRNG SITE, STORAGE FAC	340	
CAMP WILLIAMS		340
VIRGINIA		
ARMY		
FORT EUSTIS		
DEPLOYMENT TRAINING FACILITY	5,400	
FORT EUSTIS		5,400
FORT MYER		
ARMY MUSEUM LAND ACQUISITION	17,000	
FORT MYER		17,000
**ARMY		22,400
NAVY		
DAM NECK FLEET COMBAT TRAIN CTR ATLANTIC		
LAND ACQUISTION		
(MEMO-NON-ADD)	(4,850)	
DAM NECK FLEET COMBAT TRAIN CTR ATLANTIC		
(MEMO-NON-ADD)		(4,850)
NORFOLK NAVAL STATION		
OILY WASTE COLLECTION SYSTEM (PHASE I)	10,580	
NORFOLK NAVAL STATION		10,580
PORTSMOUTH NAVAL HOSPITAL		
BACHELOR ENLISTED QUARTERS	9,500	
PORTSMOUTH NAVAL HOSPITAL		9,500
QUANTICO MARINE CORPS COMBAT DEV COMMAND		
AMMUNITION STORAGE FACILITY	3,500	
QUANTICO MARINE CORPS COMBAT DEV COMMAND		3,500
WILLIAMSBURG FLEET & INDUSTRIAL SUPPLY CT		
BACHELOR ENLISTED QUARTERS	6,140	
ELECTRICAL DISTRIBUTION SYS ALTERATIONS	2,250	
WILLIAMSBURG FLEET & INDUSTRIAL SUPPLY CT		8,390
YORKTOWN NAVAL WEAPONS STATION		
EXPLOSIVE ORDNANCE DISPOSAL OPS FAC(DBOF)	1,300	
YORKTOWN NAVAL WEAPONS STATION		1,300
**NAVY		33,270
(MEMO-NON-ADD)		(4,850)
AIR FORCE		
LANGLEY AFB		
ALTER AIR COMBAT COMMAND HEADQUARTERS FACI		
(MEMO-NON-ADD)	(263)	
UPGRADE STORM DRAINAGE SYSTEM	1,000	
LANGLEY AFB		1,000
(MEMO-NON-ADD)		(263)
SPECIAL OPERATIONS COMMAND		
DAM NECK		
NSWG-2 HEADQUARTERS, LITTLE CREEK	6,100	
DAM NECK		6,100
NAVAL AMPHIBIOUS BASE, LITTLE CREEK		
AMPHIB OPS SUPPORT BLDG (DAM NECK)	4,500	
NAVAL AMPHIBIOUS BASE, LITTLE CREEK		4,500
**SPECIAL OPERATIONS COMMAND		10,600

FY 1996 MILITARY CONSTRUCTION TOTAL OBLIGATIONAL AUTHORITY AS REQUESTED

ACTIVE, GUARD AND RESERVE FORCES
INSIDE THE UNITED STATES
($ THOUSANDS)

DATA AS OF FEB 1995

STATE/COMP./INSTALLATION ----------PROJECT NAME----------	PROJ COST	TOTAL
VIRGINIA		
DEFENSE LOGISTICS AGENCY		
DEFENSE DISTRIBUTION DEPOT - DDNV		
GENERAL PURPOSE WHSE REPLACEMENT (DBOF)	10,400	
DEFENSE DISTRIBUTION DEPOT - DDNV		10,400
DEFENSE MEDICAL SUPPORT ACTIVITY		
NORTHWEST NAVAL SECURITY GROUP ACTIVITY		
MEDICAL/DENTAL CLINIC	4,300	
NORTHWEST NAVAL SECURITY GROUP ACTIVITY		4,300
PORTSMOUTH NAVAL HOSPITAL		
#HOSPITAL REPLACEMENT PHASE VII	71,900	
PORTSMOUTH NAVAL HOSPITAL		71,900
AUTHORIZED IN PRIOR YEAR		(71,900)
**DEFENSE MEDICAL SUPPORT ACTIVITY		76,200
AUTHORIZED IN PRIOR YEAR		(71,900)
AIR NATIONAL GUARD		
CAMP PENDLETON ANGB		
VEHICLE MAINTENANCE COMPLEX	2,000	
CAMP PENDLETON ANGB		2,000
RICHARD E BYRD IAP		
ADD TO AND ALTER F-16 AC MAINT COMPLEX	2,700	
RICHARD E BYRD IAP		2,700
**AIR NATIONAL GUARD		4,700
FAMILY HOUSING		
NAVY		
DAHLGREN NAVAL SURFACE WARFARE CENTER		
HOUSING OFFICE/SELF HELP (NEW CONST)	(520)	
DAHLGREN NAVAL SURFACE WARFARE CENTER		
FAMILY HOUSING		(520)
PUBLIC WORKS CENTER NORFOLK		
HOUSING OFFICE/WAREHOUSE	(1,390)	
320 UNITS REPLACEMENT	(42,500)	
PUBLIC WORKS CENTER NORFOLK		
FAMILY HOUSING		(43,890)
**NAVY		
FAMILY HOUSING		(44,410)
**VIRGINIA		158,570
(MEMO-NON-ADD)		(5,113)
AUTHORIZED IN PRIOR YEAR		(71,900)
FAMILY HOUSING		(44,410)
WASHINGTON		
ARMY		
FORT LEWIS		
CONSOLIDATED FUEL STATION	3,400	
MULTI-PURPOSE TRAINING RANGE-YAKIMA	8,500	
RAIL SPUR & TANK TRAILS-YAKIMA	3,200	
TACTICAL EQUIPMENT SHOP	15,000	
TANK TRAIL EROSION MITIGATION-YAKIMA	2,000	
FORT LEWIS		32,100
NAVY		
BREMERTON PUGET SOUND NAVAL SHIPYARD		
FLEET SUPPORT FACILITIES (DBOF)	6,870	

AUTHORIZED IN PRIOR YEAR

FY 1996 MILITARY CONSTRUCTION TOTAL OBLIGATIONAL AUTHORITY AS REQUESTED

ACTIVE, GUARD AND RESERVE FORCES INSIDE THE UNITED STATES ($ THOUSANDS)

DATA AS OF FEB 1995

STATE/COMP./INSTALLATION ----------PROJECT NAME----------	PROJ COST	TOTAL
WASHINGTON		
NAVY		
BREMERTON PUGET SOUND NAVAL SHIPYARD		
METAL PREPARATION FAC IMPROVEMENTS (DBOF)	2,600	
BREMERTON PUGET SOUND NAVAL SHIPYARD		9,470
KEYPORT NAVAL UNDERSEA WARFARE CENTER DIV		
METAL TREATMENT FACILITY (DBOF)	5,300	
KEYPORT NAVAL UNDERSEA WARFARE CENTER DIV		5,300
**NAVY		14,770
AIR FORCE		
FAIRCHILD AFB		
ALTER DORMITORIES	7,500	
FAIRCHILD AFB		7,500
MCCHORD AFB		
DORMITORY	4,300	
SQUADRON OPERATIONS/ AIRCRAFT MAINTENANCE	5,600	
MCCHORD AFB		9,900
**AIR FORCE		17,400
FAMILY HOUSING		
ARMY		
FORT LEWIS		
FAMILY HOUSING REPLACEMENT CONST (84)	(10,800)	
FORT LEWIS		
FAMILY HOUSING		(10,800)
AIR FORCE		
MCCHORD AFB		
REPLACE 50 FAMILY HOUSING UNITS, PHASE I	(9,504)	
MCCHORD AFB		
FAMILY HOUSING		(9,504)
**WASHINGTON		64,270
FAMILY HOUSING		(20,304)
WISCONSIN		
AIR NATIONAL GUARD		
TRUAX FIELD		
ALTER MUNITIONS FACILITY	670	
TRUAX FIELD		670
ARMY RESERVE		
GREEN BAY		
USARC/OMS/AMSA	6,523	
GREEN BAY		6,523
**WISCONSIN		7,193
WYOMING		
AIR FORCE		
FE WARREN AFB		
ALTER DORMITORIES	5,500	
UPGRADE CENTRAL HEAT PLANT	3,500	
FE WARREN AFB		9,000
ARMY NATIONAL GUARD		
CODY		
OMSS	342	
CODY		342

FY 1996 MILITARY CONSTRUCTION TOTAL OBLIGATIONAL AUTHORITY AS REQUESTED

ACTIVE, GUARD AND RESERVE FORCES
INSIDE THE UNITED STATES
($ THOUSANDS)

DATA AS OF FEB 1995

STATE/COMP./INSTALLATION ----------PROJECT NAME----------	PROJ COST	TOTAL
WYOMING		
ARMY NATIONAL GUARD		
NEWCASTLE		
OMSS	348	
NEWCASTLE		348
**ARMY NATIONAL GUARD		690
**WYOMING		9,690
CONUS CLASSIFIED		
ARMY		
CLASSIFIED LOCATIONS		
CLASSIFIED PROJECT	1,900	
CLASSIFIED LOCATIONS		1,900
AIR FORCE		
CLASSIFIED LOCATION		
SPECIAL TACTICAL UNIT DETACHMENT FACILITY	700	
CLASSIFIED LOCATION		700
DEFENSE LEVEL ACTIVITIES		
OSD MILCON		
CLASSIFIED LOCATION	11,500	
OSD MILCON		11,500
**CONUS CLASSIFIED		14,100
CONUS VARIOUS		
NAVY		
CONUS VARIOUS		
SUPPLY WAREHSE	1,200	
CONUS VARIOUS		1,200

TOTALS

ARMY	380,629
FAMILY HOUSING	(27,300)
NAVY	372,125
(MEMO-NON-ADD)	(4,850)
FAMILY HOUSING	(193,178)
AIR FORCE	497,830
(MEMO-NON-ADD)	(1,449)
FAMILY HOUSING	(143,355)
DEFENSEWIDE	649,647
AUTHORIZED IN PRIOR YEAR	(219,000)
INSIDE THE UNITED STATES	1,900,231
(MEMO-NON-ADD)	(6,299)
AUTHORIZED IN PRIOR YEAR	(219,000)
FAMILY HOUSING	(363,833)

FY 1996 MILITARY CONSTRUCTION TOTAL OBLIGATIONAL AUTHORITY AS REQUESTED

ACTIVE, GUARD AND RESERVE FORCES DATA AS OF FEB 1995
SPECIFIED OUTSIDE THE UNITED STATES
($ THOUSANDS)

STATE/COMP./INSTALLATION -----PROJECT NAME-----	PROJ COST	TOTAL
GERMANY		
AIR FORCE		
SPANGDAHLEM AB		
ADD TO MISSILE MAINTENANCE FACILITY	930	
DORMITORY	5,900	
SOUND SUPPRESSOR FOUNDATION	950	
SOUND SUPPRESSOR FOUNDATION	600	
SPANGDAHLEM AB		8,380
VOGELWEH		
CHILD DEVELOPMENT CENTER	2,600	
VOGELWEH		2,600
**AIR FORCE		10,980
DOD DEPENDENT SCHOOLS		
RAMSTEIN		
ELEMENTARY/JUNIOR HIGH SCHOOL ADDITIONS	19,205	
RAMSTEIN		19,205
**GERMANY		30,185
GREECE		
AIR FORCE		
ARAXOS		
DORMITORY	1,950	
ARAXOS		1,950
GUAM		
NAVY		
NAVAL COMPUTER&TELCOM AREA MASTERSTA WPAC		
BACHELOR ENLISTED QUARTERS MODERNIZATION	2,250	
NAVAL COMPUTER&TELCOM AREA MASTERSTA WPAC		2,250
NAVY PUBLIC WORKS CENTER		
WASTEWATER TREATMENT PLANT UPGRADES	16,180	
NAVY PUBLIC WORKS CENTER		16,180
**NAVY		18,430
SPECIAL OPERATIONS COMMAND		
NS GUAM		
SEAL TEAM DET BUILDING, GUAM	8,800	
NS GUAM		8,800
FAMILY HOUSING		
AIR FORCE		
ANDERSEN AFB		
HOUSING MAINTENANCE FACILITY	(1,700)	
ANDERSEN AFB		
FAMILY HOUSING		(1,700)
**GUAM		27,230
FAMILY HOUSING		(1,700)
ITALY		
NAVY		
NAPLES NAVAL SUPPORT ACTIVITY		
OPERATIONS SUPPORT CENTER	10,000	
QUALITY OF LIFE FACILITIES (PHASE III)	14,950	
NAPLES NAVAL SUPPORT ACTIVITY		24,950
SIGONELLA NAVAL AIR FACILITY		
FIRE PROTECTION SYSTEM	870	
SIGONELLA NAVAL AIR FACILITY		870

FY 1996 MILITARY CONSTRUCTION TOTAL OBLIGATIONAL AUTHORITY AS REQUESTED

ACTIVE, GUARD AND RESERVE FORCES DATA AS OF FEB 1995
SPECIFIED OUTSIDE THE UNITED STATES
($ THOUSANDS)

STATE/COMP./INSTALLATION ----------PROJECT NAME----------	PROJ COST	TOTAL
ITALY		
NAVY		
SIGONELLA NAVAL AIR STATION		
BACHELOR ENLISTED QUARTERS	11,300	
SIGONELLA NAVAL AIR STATION		11,300
**NAVY		37,120
AIR FORCE		
AVIANO AB		
COMMUNICATIONS MAINTENANCE FACILITY	1,400	
SQUADRON OPERATIONS FACILITY	950	
AVIANO AB		2,350
GHEDI AIRFIELD		
DORMITORY	1,450	
GHEDI AIRFIELD		1,450
**AIR FORCE		3,800
DOD DEPENDENT SCHOOLS		
SIGONELLA NAVAL AIR STATION		
ELEMENTARY/HIGH SCHOOL ADDITIONS	7,595	
SIGONELLA NAVAL AIR STATION		7,595
DEFENSE MEDICAL SUPPORT ACTIVITY		
U.S. NAVAL SUPPORT ACTIVITY, NAPLES		
DISPENSARY (CAPODICHINO)	5,000	
U.S. NAVAL SUPPORT ACTIVITY, NAPLES		5,000
**ITALY		53,515
KOREA		
ARMY		
COMBINED FIELD ARMY		
WHOLE BARRACKS COMPLEX RENEWAL	6,800	
COMBINED FIELD ARMY		6,800
EASTERN CORRIDOR		
DINING FACILITY	4,150	
WHOLE BARRACKS COMPLEX RENEWAL	6,200	
WHOLE BARRACKS COMPLEX RENEWAL	7,300	
EASTERN CORRIDOR		17,650
WESTERN CORRIDOR		
WHOLE BARRACKS COMPLEX RENEWAL	5,600	
WESTERN CORRIDOR		5,600
**ARMY		30,050
PUERTO RICO		
NAVY		
ROOSEVELT ROADS NAVAL STATION		
SANITARY LANDFILL	11,500	
ROOSEVELT ROADS NAVAL STATION		11,500
SABANA SECA NAVAL SECURITY GROUP ACTIVITY		
ROAD IMPROVEMENTS	2,200	
SABANA SECA NAVAL SECURITY GROUP ACTIVITY		2,200
**NAVY		13,700
DEFENSE LOGISTICS AGENCY		
DEFENSE FUEL SUPPORT POINT ROOSEVELT ROADS		
FUEL STORAGE (DBOF)	6,200	
DEFENSE FUEL SUPPORT POINT ROOSEVELT ROADS		6,200

FY 1996 MILITARY CONSTRUCTION TOTAL OBLIGATIONAL AUTHORITY AS REQUESTED

ACTIVE, GUARD AND RESERVE FORCES SPECIFIED OUTSIDE THE UNITED STATES ($ THOUSANDS)

DATA AS OF FEB 1995

STATE/COMP./INSTALLATION ----------PROJECT NAME----------	PROJ COST	TOTAL
PUERTO RICO		
AIR NATIONAL GUARD		
PUERTO RICO IAP		
ADD TO AND ALTER COMPOSITE SUPT FACILITY	510	
MUNITIONS MAINT & STORAGE COMPLEX	3,800	
UPGRADE SECURITY SYSTEM	1,350	
PUERTO RICO IAP		5,660
FAMILY HOUSING		
NAVY		
NS ROOSEVELT ROADS RQ		
HOUSING OFFICE (NEW CONSTR)	(710)	
NS ROOSEVELT ROADS RQ		
FAMILY HOUSING		(710)

**PUERTO RICO		25,560
FAMILY HOUSING		(710)
SPAIN		
DEFENSE LOGISTICS AGENCY		
DFSC ROTA		
HYDRANT FUEL SYSTEM (DBOF)	7,400	
DFSC ROTA		7,400
TURKEY		
AIR FORCE		
ANKARA		
LONG PERIOD SEISIC ARRAY	3,000	
SHORT PERIOD SEISMIC ARRAY	4,000	
ANKARA		7,000
INCIRLIK AB		
CHILD DEVELOPMENT CENTER	1,600	
UPGRADE SEWAGE TREATMENT PLANT	2,900	
INCIRLIK AB		4,500

**AIR FORCE		11,500
FAMILY HOUSING		
AIR FORCE		
INCIRLIK AB		
REPLACE 150 MILITARY FAMILY HOUSING UNITS	(9,900)	
INCIRLIK AB		
FAMILY HOUSING		(9,900)

**TURKEY		11,500
FAMILY HOUSING		(9,900)
UNITED KINGDOM		
AIR FORCE		
RAF LAKENHEATH		
ADD TO MISSILE MAINTENANCE FACILITY	1,820	
RAF LAKENHEATH		1,820
RAF MILDENHALL		
ADD TO AND ALTER CHILD DEVELOPMENT CENTER	2,250	
RAF MILDENHALL		2,250

**AIR FORCE		4,070
NATIONAL SECURITY AGENCY		
MENWITH HILL STATION		
WAREHOUSE SPRINKLERS	677	
MENWITH HILL STATION		677

**UNITED KINGDOM		4,747

FY 1996 MILITARY CONSTRUCTION TOTAL OBLIGATIONAL AUTHORITY AS REQUESTED

ACTIVE, GUARD AND RESERVE FORCES
SPECIFIED OUTSIDE THE UNITED STATES
($ THOUSANDS)

DATA AS OF FEB 1995

STATE/COMP./INSTALLATION ----------PROJECT NAME----------	PROJ COST	TOTAL
OVERSEAS CLASSIFIED		
AIR FORCE		
OVERSEAS CLASSIFIED		
VEHICLE MAINTENANCE FACILITY	1,600	
WAR READINESS MATERIAL WAREHOUSES	15,500	
OVERSEAS CLASSIFIED		17,100
OVERSEAS VARIOUS		
ARMY		
VARIOUS LOCATIONS		
STRATEGIC LOGISTICAL PREPO COMPLEX PH I	48,000	
VARIOUS LOCATIONS		48,000

TOTALS

ARMY	78,050
NAVY	69,250
FAMILY HOUSING	(710)
AIR FORCE	55,060
FAMILY HOUSING	(11,600)
DEFENSEWIDE	54,877
SPECIFIED OUTSIDE THE UNITED STATES	257,237
FAMILY HOUSING	(12,310)

FY 1996 MILITARY CONSTRUCTION TOTAL OBLIGATIONAL AUTHORITY AS REQUESTED

ACTIVE, GUARD AND RESERVE FORCES — DATA AS OF FEB 1995
UNSPECIFIED WORLDWIDE
($ THOUSANDS)

STATE/COMP./INSTALLATION ----------PROJECT NAME----------	PROJ COST	TOTAL
WORLDWIDE UNSPECIFIED		
NATO INFRASTRUCTURE		
DEFENSE LEVEL ACTIVITIES	199,000	
NATO INFRASTRUCTURE		199,000
BASE REALIGNMENT & CLOSURE PART II		
DEFENSE LEVEL ACTIVITIES	1,044,143	
BASE REALIGNMENT & CLOSURE PART II		1,044,143
BASE REALIGNMENT & CLOSURE ACCT PART III		
DEFENSE LEVEL ACTIVITIES	2,148,480	
BASE REALIGNMENT & CLOSURE ACCT PART III		2,148,480
BASE REALIGNMENT & CLOSURE ACCT PART IV		
DEFENSE LEVEL ACTIVITIES	784,569	
BASE REALIGNMENT & CLOSURE ACCT PART IV		784,569
CONTINGENCY CONSTRUCTION		
DEFENSE LEVEL ACTIVITIES	11,037	
CONTINGENCY CONSTRUCTION		11,037
UNSPECIFIED MINOR CONSTRUCTION		
AIR FORCE RESERVE	4,169	
UNSPECIFIED MINOR CONSTRUCTION		4,169
PLANNING AND DESIGN		
AIR FORCE RESERVE	2,700	
PLANNING AND DESIGN		2,700
UNSPECIFIED MINOR CONSTRUCTION		
ARMY	9,000	
NAVY	7,200	
AIR FORCE	9,030	
SPECIAL OPERATIONS COMMAND	1,700	
BALLISTIC MISSILE DEFENSE ORAGNIZATION	2,909	
DEFENSE LEVEL ACTIVITIES	3,100	
JOINT CHIEFS OF STAFF	6,198	
DOD DEPENDENT SCHOOLS	4,000	
DEFENSE MEDICAL SUPPORT ACTIVITY	5,100	
ARMY NATIONAL GUARD	5,300	
AIR NATIONAL GUARD	4,100	
ARMY RESERVE	1,700	
UNSPECIFIED MINOR CONSTRUCTION		59,337
PLANNING AND DESIGN		
ARMY	32,894	
NAVY	44,457	
AIR FORCE	30,835	
ARMY BUDGETED BY DOD	13,000	
SPECIAL OPERATIONS COMMAND	5,407	
DEFENSE FINANCE AND ACCOUNTING SERVICE	8,600	
BALLISTIC MISSILE DEFENSE ORAGNIZATION	500	
DEFENSE LEVEL ACTIVITIES	13,000	
DEFENSE MEDICAL SUPPORT ACTIVITY	28,330	
ARMY NATIONAL GUARD	2,900	
AIR NATIONAL GUARD	4,580	
ARMY RESERVE	3,694	
NAVY RESERVE	2,974	
PLANNING AND DESIGN		191,171
ENERGY CONSERVATION IMPROVEMENT PROGRAM		
DEFENSE LEVEL ACTIVITIES	50,000	
ENERGY CONSERVATION IMPROVEMENT PROGRAM		50,000
ARMY - HOST NATION SUPPORT		
ARMY	20,000	
ARMY - HOST NATION SUPPORT		20,000
WORLDWIDE UNSPECIFIED		4,514,606

FY 1996 MILITARY CONSTRUCTION TOTAL OBLIGATIONAL AUTHORITY AS REQUESTED

ACTIVE, GUARD AND RESERVE FORCES — DATA AS OF FEB 1995
UNSPECIFIED WORLDWIDE
($ THOUSANDS)

STATE/COMP./INSTALLATION ----------PROJECT NAME----------	PROJ COST	TOTAL
TOTALS		
ARMY		75,488
NAVY		54,631
AIR FORCE		55,414
DEFENSEWIDE		4,329,073
UNSPECIFIED WORLDWIDE		4,514,606

FY 1996 FAMILY HOUSING TOTAL OBLIGATIONAL AUTHORITY AS REQUESTED

DATA AS OF FEB 1995

($ THOUSANDS)

STATE/COMP./INSTALLATION ----------PROJECT NAME----------	PROJ COST	TOTAL
ARMY		
NEW CONSTRUCTION		
NEW YORK		
U S MILITARY ACADEMY		
FAMILY HOUSING REPLACEMENT CONST (119)	16,500	
U S MILITARY ACADEMY		16,500
WASHINGTON		
FORT LEWIS		
FAMILY HOUSING REPLACEMENT CONST (84)	10,800	
FORT LEWIS		10,800
NEW CONSTRUCTION		27,300
CONSTRUCTION IMPROVEMENTS	14,200	14,200
PLANNING	2,000	2,000
TOTAL FAMILY HOUSING, ARMY CONSTRUCTION		43,500
OPERATING EXPENSES		
FURNISHINGS ACCOUNT	48,822	
MANAGEMENT ACCOUNT	84,726	
MISCELLANEOUS ACCOUNT	1,286	
SERVICES ACCOUNT	53,243	
UTILITIES ACCOUNT	271,376	
OPERATING EXPENSES		459,453
LEASING	243,840	243,840
MAINTENANCE OF REAL PROPERTY	634,292	634,292
TOTAL FAMILY HOUSING, ARMY OPERATIONS		1,337,585
INTEREST PAYMENTS	11	11
TOTAL FAMILY HOUSING, ARMY DEBT		11
GRAND TOTAL FAMILY HOUSING, ARMY		1,381,096
NAVY		
NEW CONSTRUCTION		
CALIFORNIA		
LEMOORE NAVAL AIR STATION		
240 UNITS REPLACEMENT	34,900	
LEMOORE NAVAL AIR STATION		34,900
MARINE CORPS BASE CAMP PENDLETON		
COMMUNITY CENTER	1,438	
HOUSING OFFICE	707	
69 UNITS NEW CONSTRUCTION	10,000	
MARINE CORPS BASE CAMP PENDLETON		12,145
PACIFIC MISSILE TEST CENTER POINT MUGU		
HOUSING OFFICE/SELF HELP (NEW CONST)	1,020	
PACIFIC MISSILE TEST CENTER POINT MUGU		1,020
PUBLIC WORKS CENTER SAN DIEGO		
346 UNITS REPLACEMENT	49,310	
PUBLIC WORKS CENTER SAN DIEGO		49,310
CALIFORNIA		97,375
HAWAII		
NAVAL COMPLEX, OAHU		
252 UNITS REPLACEMENT	48,400	
NAVAL COMPLEX, OAHU		48,400

FY 1996 FAMILY HOUSING TOTAL OBLIGATIONAL AUTHORITY AS REQUESTED

DATA AS OF FEB 1995

($ THOUSANDS)

STATE/COMP./INSTALLATION ----------PROJECT NAME----------	PROJ COST	TOTAL
NAVY		
NEW CONSTRUCTION		
MARYLAND		
NAVAL AIR TEST CENTER PATUXENT RIVER		
WAREHOUSE/SELF HELP (NEW CONST)	890	
NAVAL AIR TEST CENTER PATUXENT RIVER		890
USNA ANNAPOLIS MD		
HOUSING OFFICE/SELF HELP (NEW CONST)	800	
USNA ANNAPOLIS MD		800
MARYLAND		1,690
NORTH CAROLINA		
MARINE CORPS AIR STATION CHERRY POINT NC		
COMMUNITY CENTER	1,003	
MARINE CORPS AIR STATION CHERRY POINT NC		1,003
PENNSYLVANIA		
NSCC MECHANICBURG PA		
HOUSING OFFICE (NEW CONSTR)	300	
NSCC MECHANICBURG PA		300
VIRGINIA		
DAHLGREN NAVAL SURFACE WARFARE CENTER		
HOUSING OFFICE/SELF HELP (NEW CONST)	520	
DAHLGREN NAVAL SURFACE WARFARE CENTER		520
PUBLIC WORKS CENTER NORFOLK		
HOUSING OFFICE/WAREHOUSE	1,390	
320 UNITS REPLACEMENT	42,500	
PUBLIC WORKS CENTER NORFOLK		43,890
VIRGINIA		44,410
PUERTO RICO		
NS ROOSEVELT ROADS RQ		
HOUSING OFFICE (NEW CONSTR)	710	
NS ROOSEVELT ROADS RQ		710
NEW CONSTRUCTION		193,888
CONSTRUCTION IMPROVEMENTS	247,477	247,477
PLANNING	24,390	24,390
TOTAL FAMILY HOUSING, NAVY CONSTRUCTION		465,755
OPERATING EXPENSES		
FURNISHINGS ACCOUNT	35,320	
MANAGEMENT ACCOUNT	93,170	
MISCELLANEOUS ACCOUNT	1,252	
SERVICES ACCOUNT	66,363	
UTILITIES ACCOUNT	214,537	
OPERATING EXPENSES		410,642
LEASING	103,582	103,582
MAINTENANCE OF REAL PROPERTY	534,023	534,023
TOTAL FAMILY HOUSING, NAVY OPERATIONS		1,048,247
MORTGAGE INSURANCE PREMIUMS	82	82
TOTAL FAMILY HOUSING, NAVY DEBT		82
GRAND TOTAL FAMILY HOUSING, NAVY		1,514,084
AIR FORCE		
NEW CONSTRUCTION		
ALASKA		
ELMENDORF AFB		
HOUSING OFFICE AND MAINTENANCE FACILITY	3,000	
ELMENDORF AFB		3,000

FY 1996 FAMILY HOUSING TOTAL OBLIGATIONAL AUTHORITY AS REQUESTED

DATA AS OF FEB 1995

($ THOUSANDS)

STATE/COMP./INSTALLATION ----------PROJECT NAME----------	PROJ COST	TOTAL
AIR FORCE		
NEW CONSTRUCTION		
ARIZONA		
DAVIS-MONTHAN AFB		
REPLACE 80 MILITARY FAMILY HOUSING UNITS,	9,498	
DAVIS-MONTHAN AFB		9,498
ARKANSAS		
LITTLE ROCK AFB		
REPLACE 1 GENERAL OFFICER'S QUARTERS UNIT	210	
LITTLE ROCK AFB		210
CALIFORNIA		
BEALE AFB		
CONSTRUCT FAMILY HOUSING MANAGEMENT OFFICE	842	
BEALE AFB		842
EDWARDS AFB		
REPLACE 67 MILITARY FAMILY HOUSING UNITS	11,350	
EDWARDS AFB		11,350
VANDENBERG AFB		
FAMILY HOUSING MANAGEMENT OFFICE	900	
REPLACE 143 MILITARY FAMILY HOUSING UNITS	20,200	
VANDENBERG AFB		21,100
CALIFORNIA		33,292
COLORADO		
PETERSON AFB		
FAMILY HOUSING OFFICE	570	
PETERSON AFB		570
DISTRICT OF COLUMBIA		
BOLLING AFB		
REPLACE 32 MILITARY FAMILY HOUSING UNITS	4,100	
BOLLING AFB		4,100
FLORIDA		
EGLIN AFB		
CONSTRUCT FAMILY HOUSING MANAGEMENT FAC	500	
FAMILY HOUSING OFFICE & MAINT FACILITY	880	
EGLIN AFB		1,380
MACDILL AFB		
CONSTRUCT HOUSING OFFICE	646	
MACDILL AFB		646
PATRICK AFB		
REPLACE 70 MILITARY FAMILY HOUSING UNITS,	7,947	
PATRICK AFB		7,947
TYNDALL AFB		
REPLACE 52 MILITARY FAMILY HOUSING UNITS	5,500	
TYNDALL AFB		5,500
FLORIDA		15,473
GEORGIA		
MOODY AFB		
REPLACE 1 SR OFF QTRS/1 GEN OFF QTRS, CON	513	
MOODY AFB		513
IDAHO		
MOUNTAIN HOME AFB		
CONSTRUCT HOUSING MANAGEMENT FACILITY	844	
MOUNTAIN HOME AFB		844
KANSAS		
MCCONNELL AFB		
REPLACE 39 HOUSING UNITS	5,193	
MCCONNELL AFB		5,193

FY 1996 FAMILY HOUSING TOTAL OBLIGATIONAL AUTHORITY AS REQUESTED

DATA AS OF FEB 1995

($ THOUSANDS)

STATE/COMP./INSTALLATION PROJECT NAME	PROJ COST	TOTAL
AIR FORCE		
NEW CONSTRUCTION		
LOUISIANA		
BARKSDALE AFB		
REPLACE 62 MILITARY FAMILY HOUSING UNITS,	10,299	
BARKSDALE AFB		10,299
MISSISSIPPI		
KEESLER AFB		
REPLACE 98 MILITARY FAMILY HOUSING UNITS	9,300	
KEESLER AFB		9,300
MISSOURI		
WHITEMAN AFB		
CONSTRUCT 72 MILITARY FAMILY HOUSING UNITS	9,948	
WHITEMAN AFB		9,948
NEVADA		
NELLIS AFB		
REPLACE 6 SENIOR OFFICERS HOUSING	1,357	
NELLIS AFB		1,357
NEW MEXICO		
HOLLOMAN AFB		
REPLACE 1 GENERAL OFFICER'S HOUSING	225	
HOLLOMAN AFB		225
KIRTLAND AFB		
REPLACE 105 FAMILY HOUSING UNITS, PHASE 2	11,000	
KIRTLAND AFB		11,000
NEW MEXICO		11,225
NORTH CAROLINA		
POPE AFB		
CONSTRUCT 104 MILITARY FAMILY HOUSING UNIT	9,984	
POPE AFB		9,984
SEYMOUR JOHNSON AFB		
REPLACE 1 GENERAL OFFICERS QUARTERS	204	
SEYMOUR JOHNSON AFB		204
NORTH CAROLINA		10,188
SOUTH CAROLINA		
SHAW AFB		
HOUSING MAINTENANCE FACILITY	715	
SHAW AFB		715
TEXAS		
DYESS AFB		
CONSTRUCT HOUSING MAINTENANCE FACILITY	580	
REPLACE 150 MILITARY FAMILY HOUSING UNITS	246	
DYESS AFB		826
LACKLAND AFB		
REPLACE 67 MILITARY FAMILY HOUSING UNITS,	6,200	
LACKLAND AFB		6,200
SHEPPARD AFB		
CONSTRUCT MANAGEMENT OFFICE	500	
REPLACE FAMILY HOUSING MAINTENANCE FAC	600	
SHEPPARD AFB		1,100
TEXAS		8,126
WASHINGTON		
MCCHORD AFB		
REPLACE 50 FAMILY HOUSING UNITS, PHASE I	9,504	
MCCHORD AFB		9,504

FY 1996 FAMILY HOUSING TOTAL OBLIGATIONAL AUTHORITY AS REQUESTED

DATA AS OF FEB 1995

($ THOUSANDS) STATE/COMP./INSTALLATION ----------PROJECT NAME----------	PROJ COST	TOTAL
AIR FORCE		
NEW CONSTRUCTION		
GUAM		
ANDERSEN AFB		
HOUSING MAINTENANCE FACILITY	1,700	
ANDERSEN AFB		1,700
TURKEY		
INCIRLIK AB		
REPLACE 150 MILITARY FAMILY HOUSING UNITS	9,900	
INCIRLIK AB		9,900
NEW CONSTRUCTION		154,955
CONSTRUCTION IMPROVEMENTS	85,059	85,059
PLANNING	8,989	8,989
TOTAL FAMILY HOUSING, AIR FORCE CONSTRUCTION		249,003
OPERATING EXPENSES		
FURNISHINGS ACCOUNT	43,000	
MANAGEMENT ACCOUNT	45,154	
MISCELLANEOUS ACCOUNT	5,678	
SERVICES ACCOUNT	33,177	
UTILITIES ACCOUNT	197,539	
OPERATING EXPENSES		324,548
LEASING	115,665	115,665
MAINTENANCE OF REAL PROPERTY	408,971	408,971
TOTAL FAMILY HOUSING, AIR FORCE OPERATIONS		849,184
MORTGAGE INSURANCE PREMIUMS	29	29
TOTAL FAMILY HOUSING, AIR FORCE DEBT		29
GRAND TOTAL FAMILY HOUSING, AIR FORCE		1,098,216
DEFENSE LEVEL ACTIVITIES		
NEW CONSTRUCTION		
WORLDWIDE UNSPECIFIED		
UNSPECIFIED WORLDWIDE LOCATIONS		
PRIVATE SECTOR HSG VENTURES,LOCATIONS TBD	22,000	
UNSPECIFIED WORLDWIDE LOCATIONS		22,000
NEW CONSTRUCTION		22,000
TOTAL FAMILY HOUSING, ASDA		22,000
NATIONAL SECURITY AGENCY		
CONSTRUCTION IMPROVEMENTS	50	50
OPERATING EXPENSES		
FURNISHINGS ACCOUNT	784	
MANAGEMENT ACCOUNT	70	
MISCELLANEOUS ACCOUNT	36	
SERVICES ACCOUNT	350	
UTILITIES ACCOUNT	400	
OPERATING EXPENSES		1,640
LEASING	11,236	11,236
MAINTENANCE OF REAL PROPERTY	223	223
TOTAL FAMILY HOUSING, NSA		13,149

FY 1996 FAMILY HOUSING TOTAL OBLIGATIONAL AUTHORITY AS REQUESTED

DATA AS OF FEB 1995

($ THOUSANDS)

STATE/COMP./INSTALLATION ----------PROJECT NAME----------	PROJ COST	TOTAL
DEF INTELLIGENCE AGENCY		
OPERATING EXPENSES		
FURNISHINGS ACCOUNT	2,590	
OPERATING EXPENSES		2,590
LEASING	13,638	13,638
TOTAL FAMILY HOUSING, DIA		16,228
DEFENSE LOGISTICS AGENCY		
CONSTRUCTION IMPROVEMENTS	3,722	3,722
OPERATING EXPENSES		
FURNISHINGS ACCOUNT	26	
MANAGEMENT ACCOUNT	161	
SERVICES ACCOUNT	33	
UTILITIES ACCOUNT	346	
OPERATING EXPENSES		566
MAINTENANCE OF REAL PROPERTY	574	574
TOTAL FAMILY HOUSING, DLA		4,862
GRAND TOTAL FAMILY HOUSING, DEFENSE		56,239
ARMY		
PAYMENT TO HOMEOWNERS	23,862	23,862
OTHER OPERATING COSTS	35,847	35,847
ACQUISITION OF REAL PROPERTY	178,769	178,769
ARMY		238,478

FY 1997 MILITARY CONSTRUCTION TOTAL OBLIGATIONAL AUTHORITY AS REQUESTED

ACTIVE, GUARD AND RESERVE FORCES INSIDE THE UNITED STATES ($ THOUSANDS) — DATA AS OF FEB 1995

STATE/COMP./INSTALLATION ----------PROJECT NAME----------	PROJ COST	TOTAL
ALABAMA		
AIR NATIONAL GUARD		
DANNELLY FIELD		
UPGRADE BASE SUPPLY & BASE ENGINEER FAC	2,700	
DANNELLY FIELD		2,700
AIR FORCE RESERVE		
MAXWELL AFB		
AIRCRAFT MAINTENANCE HANGAR	5,460	
MAXWELL AFB		5,460
FAMILY HOUSING		
ARMY		
REDSTONE ARSENAL		
FAMILY HOUSING REPLACEMENT CONST (118)	(12,000)	
REDSTONE ARSENAL		
FAMILY HOUSING		(12,000)
**ALABAMA		8,160
FAMILY HOUSING		(12,000)
ALASKA		
AIR FORCE		
EIELSON AFB		
CONVENTIONAL MUNITIONS MAINTENANCE SHOP	3,300	
REPAIR UTILIDOR PIPE	2,173	
EIELSON AFB		5,473
ELMENDORF AFB		
ADAL SQUADRON OPERATIONS/ AIRCRAFT MAINTEN	14,500	
UPGRADE STORM DRAINAGE SYSTEM	2,100	
ELMENDORF AFB		16,600
KING SALMON AIRPORT		
LAND ACQUISITION	900	
KING SALMON AIRPORT		900
**AIR FORCE		22,973
DEFENSE LOGISTICS AGENCY		
DFSC ELMENDORF AFB		
HYDRANT FUEL SYSTEM	17,500	
DFSC ELMENDORF AFB		17,500
FAMILY HOUSING		
AIR FORCE		
EIELSON AFB		
CONSTRUCT FIRE STATION	(2,950)	
REPLACE 72 MILITARY FAMILY HOUSING UNITS	(22,029)	
EIELSON AFB		
FAMILY HOUSING		(24,979)
**ALASKA		40,473
FAMILY HOUSING		(24,979)
ARIZONA		
AIR FORCE		
DAVIS-MONTHAN AFB		
AIRCRAFT MAINTENANCE FACILITY (DBOF)	4,500	
DAVIS-MONTHAN AFB		4,500
FAMILY HOUSING		
NAVY		
MCAS YUMA		
COMMUNITY CENTER	(747)	
MCAS YUMA		
FAMILY HOUSING		(747)
**ARIZONA		4,500
FAMILY HOUSING		(747)

FY 1997 MILITARY CONSTRUCTION TOTAL OBLIGATIONAL AUTHORITY AS REQUESTED

ACTIVE, GUARD AND RESERVE FORCES
INSIDE THE UNITED STATES
($ THOUSANDS)

DATA AS OF FEB 1995

STATE/COMP./INSTALLATION ----------PROJECT NAME----------	PROJ COST	TOTAL
ARKANSAS		
AIR FORCE		
LITTLE ROCK AFB		
C-130 SQUARDRON OPERATIONS/ACFT MAINTEN.	12,800	
CONTROL TOWER	2,400	
INDUSTRIAL WASTEWATER PRETREATMENT FAC	1,200	
LITTLE ROCK AFB		16,400
ARMY BUDGETED BY DOD		
PINE BLUFF ARSENAL		
AMMUNITION DEMILITARIZATION FAC PHASE III	72,000	
PINE BLUFF ARSENAL		72,000
**ARKANSAS		88,400
CALIFORNIA		
ARMY		
CONCORD NAVAL WEAPONS STATION		
AMMUNITION PIER (DBOF)	20,000	
CONCORD NAVAL WEAPONS STATION		20,000
NAVY		
CAMP PENDLETON MARINE CORPS AIR STATION		
AIRCRAFT PARKING APRON	1,590	
RUNWAY IMPROVEMENTS	1,420	
TRANSPORTATION INFRASTRUCTURE	5,460	
CAMP PENDLETON MARINE CORPS AIR STATION		8,470
CAMP PENDLETON MARINE CORPS BASE		
AUTOMATED FIELD FIRING RANGE	4,968	
BACHELOR ENLISTED QUARTERS	9,570	
PHYSICAL FITNESS CENTER	4,000	
TACTICAL VEHICLE MAINTENANCE FACILITY	9,580	
CAMP PENDLETON MARINE CORPS BASE		28,118
NORTH ISLAND NAVAL AIR STATION		
DREDGING	22,500	
SHIP MAINTENANCE FACILITY	25,620	
NORTH ISLAND NAVAL AIR STATION		48,120
PORT HUENEME NAVAL CONSTR BATTALION CTR		
BACHELOR ENLISTED QUARTERS	12,800	
PORT HUENEME NAVAL CONSTR BATTALION CTR		12,800
SAN CLEMENTE ISLAND NAVAL FACILITY		
BACHELOR ENLISTED QUARTERS AND MESSHALL	13,000	
SAN CLEMENTE ISLAND NAVAL FACILITY		13,000
SAN DIEGO NAVAL STATION		
BACHELOR ENLISTED QUARTERS	33,500	
OILY WASTE COLLLECTION FACILITY	25,390	
PIER UPGRADE	5,900	
SAN DIEGO NAVAL STATION		64,790
TWENTYNINE PALMS MARCORP AIR-GRND COMB CTR		
CHILD DEVELOPMENT CENTER	4,100	
TWENTYNINE PALMS MARCORP AIR-GRND COMB CTR		4,100
**NAVY		179,398
AIR FORCE		
BEALE AFB		
CARS DEPLOYABLE GROUND STATION SUPPORT FAC	7,000	
INDUSTRIAL WASTEWATER PRETREATMENT FACILIT	1,500	
LANDFILL CLOSURE	5,000	
BEALE AFB		13,500

FY 1997 MILITARY CONSTRUCTION TOTAL OBLIGATIONAL AUTHORITY AS REQUESTED

ACTIVE, GUARD AND RESERVE FORCES
INSIDE THE UNITED STATES
($ THOUSANDS)

DATA AS OF FEB 1995

STATE/COMP./INSTALLATION ----------PROJECT NAME----------	PROJ COST	TOTAL
CALIFORNIA		
AIR FORCE		
EDWARDS AFB		
ADD TO AND ALTER ANECHOIC CHAMBER	4,900	
CONVERT BOILERS	4,400	
F-22 ALTER AIRCRAFT MAINTENANCE FACILITY	4,400	
RENOVATE AIRCRAFT MAINTENANCE FACILITY	8,000	
EDWARDS AFB		21,700
TRAVIS AFB		
DORMITORY	6,600	
TRAVIS AFB		6,600
VANDENBERG AFB		
COMBAT ARMS FACILITY	1,010	
VANDENBERG AFB		1,010
**AIR FORCE		42,810
SPECIAL OPERATIONS COMMAND		
NAVAL AMPHIBIOUS BASE, CORONADO		
ST 1&3 STORAGE FACILITY, CORONADO	8,100	
NAVAL AMPHIBIOUS BASE, CORONADO		8,100
DEFENSE FINANCE AND ACCOUNTING SERVICE		
OAKLAND NAVAL SUPPLY		
RENOVATE EXISTING FAC FOR ADMIN USE(DBOF)	17,575	
OAKLAND NAVAL SUPPLY		17,575
DEFENSE LOGISTICS AGENCY		
DEF DISTRIBUTION SAN DIEGO - DDDC		
REPLACE GENERAL PURPOSE WHSE (DBOF)	13,000	
DEF DISTRIBUTION SAN DIEGO - DDDC		13,000
DFSC EL CENTRO NAF		
REPLACE HYDRANT FUEL SYSTEM (DBOF)	5,100	
DFSC EL CENTRO NAF		5,100
DFSC TRAVIS AFB		
REPLACE HYDRANT FUEL SYSTEM (DBOF)	16,600	
DFSC TRAVIS AFB		16,600
**DEFENSE LOGISTICS AGENCY		34,700
DEFENSE MEDICAL SUPPORT ACTIVITY		
CAMP PENDLETON MARINE CORPS BASE		
BRANCH MEDICAL CLINIC (EDSON RANGE)	3,000	
CAMP PENDLETON MARINE CORPS BASE		3,000
NAVAL AIR STATION LEMOORE		
HOSPITAL REPLACEMENT	37,000	
NAVAL AIR STATION LEMOORE		37,000
**DEFENSE MEDICAL SUPPORT ACTIVITY		40,000
AIR NATIONAL GUARD		
CHANNEL ISLANDS ANGB		
UPGRADE DRAINAGE SYSTEMS	1,000	
CHANNEL ISLANDS ANGB		1,000
MARCH AFB		
ALTER GENERAL PURPOSE AIRCRAFT SHOPS	1,765	
MARCH AFB		1,765
SEPULVEDA ANG ANNEX		
SUPPLY & CIVIL ENGINEER FACILITY	1,800	
SEPULVEDA ANG ANNEX		1,800
**AIR NATIONAL GUARD		4,565

FY 1997 MILITARY CONSTRUCTION TOTAL OBLIGATIONAL AUTHORITY AS REQUESTED

ACTIVE, GUARD AND RESERVE FORCES — DATA AS OF FEB 1995
INSIDE THE UNITED STATES
($ THOUSANDS)

STATE/COMP./INSTALLATION PROJECT NAME	PROJ COST	TOTAL
CALIFORNIA		
FAMILY HOUSING		
NAVY		
LEMOORE NAVAL AIR STATION		
276 UNITS REPLACEMENT	(41,522)	
LEMOORE NAVAL AIR STATION FAMILY HOUSING		(41,522)
MARCOR AIR-GRND COMB CTR TWENTYNINE PALMS		
COMMUNITY CENTER	(2,180)	
HOUSING OFFICE	(1,500)	
MARCOR AIR-GRND COMB CTR TWENTYNINE PALMS FAMILY HOUSING		(3,680)
MARINE CORPS BASE CAMP PENDLETON		
133 UNITS NEW CONSTRUCTION	(20,000)	
MARINE CORPS BASE CAMP PENDLETON FAMILY HOUSING		(20,000)
PUBLIC WORKS CENTER SAN DIEGO		
366 UNITS REPLACEMENT	(52,352)	
PUBLIC WORKS CENTER SAN DIEGO FAMILY HOUSING		(52,352)
**NAVY FAMILY HOUSING		(117,554)
AIR FORCE		
BEALE AFB		
REPLACE MILITARY FAMILY HOUSING, PHASE 2	(9,649)	
BEALE AFB FAMILY HOUSING		(9,649)
EDWARDS AFB		
REPLACE 60 MILITARY FAMILY HOUSING UNITS,	(9,413)	
EDWARDS AFB FAMILY HOUSING		(9,413)
TRAVIS AFB		
REPLACE 70 MILITARY FAMILY HOUSING UNITS	(8,631)	
TRAVIS AFB FAMILY HOUSING		(8,631)
VANDENBERG AFB		
REPLACE 138 MILITARY FAMILY HOUSING UNITS	(19,499)	
VANDENBERG AFB FAMILY HOUSING		(19,499)
**AIR FORCE FAMILY HOUSING		(47,192)
**CALIFORNIA		347,148
FAMILY HOUSING		(164,746)
COLORADO		
ARMY		
FORT CARSON		
WHOLE BARRACK COMPLEX RENEWAL	37,000	
FORT CARSON		37,000
AIR FORCE		
BUCKLEY ANG BASE		
BASE SUPPLY AND EQUIPMENT WAREHOUSE	3,500	
BUCKLEY ANG BASE		3,500
CHEYENNE MT COMPLEX AFB		
DIESEL FUEL RESERVOIR	3,150	
CHEYENNE MT COMPLEX AFB		3,150

FY 1997 MILITARY CONSTRUCTION TOTAL OBLIGATIONAL AUTHORITY AS REQUESTED

ACTIVE, GUARD AND RESERVE FORCES INSIDE THE UNITED STATES ($ THOUSANDS) — DATA AS OF FEB 1995

STATE/COMP./INSTALLATION ----------PROJECT NAME----------	PROJ COST	TOTAL
COLORADO		
AIR FORCE		
FALCON AFS		
ALTER DINING FACILITY/SAFETY UPGRADE	1,700	
FALCON AFS		1,700
US AIR FORCE ACADEMY		
UPGRADE ACADEMIC FACILITY	10,470	
US AIR FORCE ACADEMY		10,470

**AIR FORCE		18,820
ARMY BUDGETED BY DOD		
PUEBLO DEPOT		
AMMUNITION DEMILITARIZATION FAC PHASE I	45,000	
PUEBLO DEPOT		45,000
AIR NATIONAL GUARD		
BUCKLEY ANGB		
UPGRADE SANITARY SEWER SYSTEM	310	
BUCKLEY ANGB		310
AIR FORCE RESERVE		
PETERSON AFB		
COMPOSITE MAINTENANCE FACILITY	3,150	
PETERSON AFB		3,150
FAMILY HOUSING		
ARMY		
FORT CARSON		
FAMILY HOUSING REPLACEMENT CONST (148)	(19,000)	
FORT CARSON		
FAMILY HOUSING		(19,000)

**COLORADO		104,280
FAMILY HOUSING		(19,000)
CONNECTICUT		
NAVY		
NEW LONDON NAVAL SUBMARINE BASE		
BACHELOR ENLISTED QUARTERS	10,700	
NEW LONDON NAVAL SUBMARINE BASE		10,700
DISTRICT OF COLUMBIA		
ARMY		
FORT LESLEY J MCNAIR		
NATIONAL DEFENSE UNIVERSITY FACILITY	6,900	
FORT LESLEY J MCNAIR		6,900
DEF INTELLIGENCE AGENCY		
BOLLING AFB		
RECONFIGURATION DIAC	6,966	
BOLLING AFB		6,966
NAVY RESERVE		
NAVAL AIR FACILITY WASHINGTON		
TRAINING BUILDING ADDITION	2,901	
NAVAL AIR FACILITY WASHINGTON		2,901
FAMILY HOUSING		
AIR FORCE		
BOLLING AFB		
REPLACE 40 MILITARY FAMILY HOUSING UNITS	(5,000)	
BOLLING AFB		
FAMILY HOUSING		(5,000)

**DISTRICT OF COLUMBIA		16,767
FAMILY HOUSING		(5,000)

FY 1997 MILITARY CONSTRUCTION TOTAL OBLIGATIONAL AUTHORITY AS REQUESTED

ACTIVE, GUARD AND RESERVE FORCES INSIDE THE UNITED STATES ($ THOUSANDS) — DATA AS OF FEB 1995

STATE/COMP./INSTALLATION ----------PROJECT NAME----------	PROJ COST	TOTAL
FLORIDA		
NAVY		
JACKSONVILLE NAVAL AIR STATION		
BACHELOR ENLISTED QUARTERS	12,500	
JACKSONVILLE NAVAL AIR STATION		12,500
AIR FORCE		
EGLIN AFB		
UPGRADE DORMITORY	7,300	
UPGRADE STORM DRAINAGE SYSTEM	1,200	
EGLIN AFB		8,500
EGLIN AFB AUXILIARY FIELD 9		
TRANSIENT QUARTERS	7,098	
EGLIN AFB AUXILIARY FIELD 9		7,098
PATRICK AFB		
AIR FREIGHT/PASSENGER TERMINAL BASE OPERAT	8,200	
CONTROL TOWER	2,200	
PATRICK AFB		10,400
**AIR FORCE		25,998
SPECIAL OPERATIONS COMMAND		
DUKE FIELD		
SOF GENERAL PURPOSE SHOPS	1,500	
DUKE FIELD		1,500
EGLIN AUX FIELD 9		
CLEAR WATER AIRCRAFT RINSE	2,150	
EGLIN AUX FIELD 9		2,150
**SPECIAL OPERATIONS COMMAND		3,650
DEFENSE FINANCE AND ACCOUNTING SERVICE		
ORLANDO NTC		
RENOVATE EXISTING FAC FOR ADMIN USE(DBOF)	4,300	
ORLANDO NTC		4,300
DEFENSE MEDICAL SUPPORT ACTIVITY		
KEY WEST NAVAL AIR STATION		
MEDICAL/DENTAL CLINIC REPLACEMENT	10,800	
KEY WEST NAVAL AIR STATION		10,800
AIR NATIONAL GUARD		
JACKSONVILLE IAP		
UPGRADE HEATING PLANTS AND CHILLERS	680	
JACKSONVILLE IAP		680
AIR FORCE RESERVE		
HOMESTEAD AFB		
FIRE TRAINING FACILITY	1,300	
HOMESTEAD AFB		1,300
FAMILY HOUSING		
AIR FORCE		
MACDILL AFB		
REPLACE 70 MILITARY FAMILY HOUSING UNITS	(8,959)	
MACDILL AFB		
FAMILY HOUSING		(8,959)
PATRICK AFB		
REPLACE 35 MILITARY FAMILY HOUSING UNITS.	(3,103)	
PATRICK AFB		
FAMILY HOUSING		(3,103)
**AIR FORCE		
FAMILY HOUSING		(12,062)
**FLORIDA		59,228
FAMILY HOUSING		(12,062)

FY 1997 MILITARY CONSTRUCTION TOTAL OBLIGATIONAL AUTHORITY AS REQUESTED

ACTIVE, GUARD AND RESERVE FORCES
INSIDE THE UNITED STATES
($ THOUSANDS)

DATA AS OF FEB 1995

STATE/COMP./INSTALLATION ----------PROJECT NAME----------	PROJ COST	TOTAL
GEORGIA		
ARMY		
FT STEWART/HUNTER AAF		
CLOSE COMBAT TACTICAL TRAINING BUILDING	6,000	
FT STEWART/HUNTER AAF		6,000
AIR FORCE		
MOODY AFB		
INDUSTRIAL WASTEWATER PRETREATMENT FACILIT	1,000	
REPAIR AND EXTEND RUNWAY	12,300	
MOODY AFB		13,300
ROBINS AFB		
JSTARS ADAL AIRCRAFT APRON/ HYDRANT FUEL S	7,100	
JSTARS ADD TO AND ALTER DINING FACILITY	4,450	
JSTARS AIRCRAFT MAINTENANCE HANGAR ASSOCIA	1,650	
JSTARS CHILD DEVELOPMENT CENTER	3,550	
JSTARS SQUADRON OPERATIONS/ AIRCRAFT MAINT	9,100	
ROBINS AFB		25,850
**AIR FORCE		39,150
AIR NATIONAL GUARD		
ROBINS AFB		
B-1 COMPOSITE AIRCRAFT MAINT. COMPLEX	13,761	
B-1 COMPOSITE SQ OPERATIONS FACILITY	6,429	
B-1 MUNITIONS MAINT & TRAINING COMPLEX	3,000	
B-1 SITE IMPROVEMENTS ROADS & UTILITIES	6,300	
ROBINS AFB		29,490
FAMILY HOUSING		
AIR FORCE		
ROBINS AFB		
REPLACE 60 MILITARY FAMILY HOUSING UNITS,	(5,763)	
ROBINS AFB		
FAMILY HOUSING		(5,763)
**GEORGIA		74,640
FAMILY HOUSING		(5,763)
HAWAII		
ARMY		
SCHOFIELD BARRACKS		
WHOLE BARRACK COMPLEX RENEWAL	35,000	
SCHOFIELD BARRACKS		35,000
NAVY		
PEARL HARBOR NAVAL STATION		
BACHELOR ENLISTED QUARTERS MODERNIZATION	15,500	
PEARL HARBOR NAVAL STATION		15,500
PEARL HARBOR NAVY PUBLIC WORKS CENTER		
SEWER OUTFALL EXTENSION	25,140	
PEARL HARBOR NAVY PUBLIC WORKS CENTER		25,140
**NAVY		40,640
AIR FORCE		
HICKAM AFB		
ALTER TRANSIENT DORMITORY	3,150	
HICKAM AFB		3,150
SPECIAL OPERATIONS COMMAND		
PEARL HARBOR		
ASDS WATERFRONT OPS FACILITY	11,300	
PEARL HARBOR		11,300

FY 1997 MILITARY CONSTRUCTION TOTAL OBLIGATIONAL AUTHORITY AS REQUESTED

ACTIVE, GUARD AND RESERVE FORCES
INSIDE THE UNITED STATES
($ THOUSANDS)

DATA AS OF FEB 1995

STATE/COMP./INSTALLATION ----------PROJECT NAME----------	PROJ COST	TOTAL
HAWAII		
FAMILY HOUSING		
ARMY		
SCHOFIELD BARRACKS		
FAMILY HOUSING REPLACEMENT CONST (190)	(30,000)	
SCHOFIELD BARRACKS		
FAMILY HOUSING		(30,000)
NAVY		
MARINE CORPS AIR STATION, KANEOHE BAY		
54 UNITS NEW CONSTRUCTION	(11,920)	
MARINE CORPS AIR STATION, KANEOHE BAY		
FAMILY HOUSING		(11,920)
NAVAL COMPLEX, OAHU		
300 UNITS REPLACEMENT	(54,810)	
NAVAL COMPLEX, OAHU		
FAMILY HOUSING		(54,810)
**NAVY		
FAMILY HOUSING		(66,730)
**HAWAII		90,090
FAMILY HOUSING		(96,730)
IDAHO		
AIR FORCE		
MOUNTAIN HOME AFB		
FLIGHTLINE FIRE STATION	5,000	
IDAHO TRAINING RANGE (SOUTH SITE)	3,000	
MOUNTAIN HOME AFB		8,000
ILLINOIS		
DEFENSE FINANCE AND ACCOUNTING SERVICE		
ROCK ISLAND ARSENAL		
RENOVATE EXISTING FAC FOR ADMIN USE(DBOF)	13,800	
ROCK ISLAND ARSENAL		13,800
DEFENSE LOGISTICS AGENCY		
DEF REUTILIZATION & MARKETING SCOTT AFB		
DRMO CONSOLIDATION (DBOF)	7,500	
DEF REUTILIZATION & MARKETING SCOTT AFB		7,500
AIR NATIONAL GUARD		
GREATER PEORIA AIRPORT		
FUEL SYSTEMS MAINT & CORROSION CONTRL FAC	3,685	
GREATER PEORIA AIRPORT		3,685
**ILLINOIS		24,985
INDIANA		
AIR NATIONAL GUARD		
FT WAYNE MAP		
UPGRADE DRAINAGE SYSTEM	500	
FT WAYNE MAP		500
KANSAS		
ARMY		
FORT LEAVENWORTH		
US DISCIPLINARY BARRACKS	58,900	
FORT LEAVENWORTH		58,900
DEFENSE LOGISTICS AGENCY		
DFSC MCCONNELL AFB		
ADD/ALTER JET FUEL STORAGE FACILITY(DBOF)	1,700	
DFSC MCCONNELL AFB		1,700

FY 1997 MILITARY CONSTRUCTION TOTAL OBLIGATIONAL AUTHORITY AS REQUESTED

ACTIVE, GUARD AND RESERVE FORCES — DATA AS OF FEB 1995
INSIDE THE UNITED STATES
($ THOUSANDS)

STATE/COMP./INSTALLATION ----------PROJECT NAME----------	PROJ COST	TOTAL
KANSAS		
AIR NATIONAL GUARD		
MCCONNELL AFB		
B-1 FUEL SYSTEMS MAINTENANCE HANGAR	5,356	
MCCONNELL AFB		5,356
ARMY RESERVE		
WICHITA		
ADD/ALT USARC/OMS/AMSA	8,389	
WICHITA		8,389
**KANSAS		74,345
KENTUCKY		
ARMY BUDGETED BY DOD		
LEXINGTON - BLUE GRASS DEPOT		
BLUE GRASS SUPPORT	7,600	
LEXINGTON - BLUE GRASS DEPOT		7,600
SPECIAL OPERATIONS COMMAND		
FORT CAMPBELL		
SUPPLY SUPPORT ACTIVITY, FT CAMPBELL	3,500	
FORT CAMPBELL		3,500
FAMILY HOUSING		
ARMY		
FORT KNOX		
FAMILY HOUSING REPLACEMENT CONST (150)	(18,500)	
FORT KNOX		
FAMILY HOUSING		(18,500)
**KENTUCKY		11,100
FAMILY HOUSING		(18,500)
LOUISIANA		
AIR FORCE		
BARKSDALE AFB		
COMMUNICATIONS SYSTEMS SQUADRON COMPLEX	2,600	
INDUSTRIAL WASTEWATER PRETREATMENT FACILIT	1,000	
BARKSDALE AFB		3,600
SPECIAL OPERATIONS COMMAND		
NEW ORLEANS		
SOF SMALL CRAFT BERTHING	730	
NEW ORLEANS		730
DEFENSE LOGISTICS AGENCY		
DFSC BARKSDALE AFB		
JET FUEL OFFLOAD FACILITY (DBOF)	5,000	
DFSC BARKSDALE AFB		5,000
NAVY RESERVE		
NAVAL AIR STATION NEW ORLEANS		
BEQ ADDITION	3,570	
NAVAL AIR STATION NEW ORLEANS		3,570
FAMILY HOUSING		
AIR FORCE		
BARKSDALE AFB		
REPLACE 108 MILITARY FAMILY HOUSING UNITS,	(10,092)	
BARKSDALE AFB		
FAMILY HOUSING		(10,092)
**LOUISIANA		12,900
FAMILY HOUSING		(10,092)

FY 1997 MILITARY CONSTRUCTION TOTAL OBLIGATIONAL AUTHORITY AS REQUESTED

ACTIVE, GUARD AND RESERVE FORCES INSIDE THE UNITED STATES ($ THOUSANDS) — DATA AS OF FEB 1995

STATE/COMP./INSTALLATION ----------PROJECT NAME----------	PROJ COST	TOTAL
MAINE		
DEFENSE FINANCE AND ACCOUNTING SERVICE		
LORING AFB		
RENOVATE EXISTING FAC FOR ADMIN USE(DBOF)	9,200	
LORING AFB		9,200
MARYLAND		
NAVY		
PATUXENT RIVER NAVAL AIR STATION		
WASTEWATER TREATMENT PLANT UPGRADE	2,500	
PATUXENT RIVER NAVAL AIR STATION		2,500
AIR FORCE		
ANDREWS AFB		
ALTER DORMITORIES	8,700	
ANDREWS AFB		8,700
NATIONAL SECURITY AGENCY		
FORT MEADE		
FANX III PURCHASE	25,200	
FORT MEADE		25,200
DEFENSE LOGISTICS AGENCY		
DFSC ANDREWS AFB		
REPLACE HYDRANT FUEL SYSTEM (DBOF)	11,400	
DFSC ANDREWS AFB		11,400
DEFENSE MEDICAL SUPPORT ACTIVITY		
ANDREWS AIR FORCE BASE		
LIFE SAFETY/EMERGENCY ROOM UPGRADE	16,940	
ANDREWS AIR FORCE BASE		16,940
AIR FORCE RESERVE		
ANDREWS AFB		
CONSOLIDATED MEDICAL TRAINING	2,294	
ANDREWS AFB		2,294
FAMILY HOUSING		
NAVY		
NAVAL AIR TEST CENTER PATUXENT RIVER		
COMMUNITY CENTER	(1,285)	
NAVAL AIR TEST CENTER PATUXENT RIVER		
FAMILY HOUSING		(1,285)

**MARYLAND		67,034
FAMILY HOUSING		(1,285)
MASSACHUSETTS		
DEFENSE LOGISTICS AGENCY		
DFSC WESTOVER AFB		
JET FUEL STORAGE COMPLEX (DBOF)	2,750	
DFSC WESTOVER AFB		2,750
AIR NATIONAL GUARD		
BARNES MAP		
UPGRADE HEATING DISTRIBUTION SYSTEM	740	
BARNES MAP		740
FAMILY HOUSING		
AIR FORCE		
HANSCOM AFB		
REPLACE 32 MILITARY FAMILY HOUSING UNITS,	(4,875)	
HANSCOM AFB		
FAMILY HOUSING		(4,875)

**MASSACHUSETTS		3,490
FAMILY HOUSING		(4,875)

FY 1997 MILITARY CONSTRUCTION TOTAL OBLIGATIONAL AUTHORITY AS REQUESTED

ACTIVE, GUARD AND RESERVE FORCES
INSIDE THE UNITED STATES
($ THOUSANDS)

DATA AS OF FEB 1995

STATE/COMP./INSTALLATION ----------PROJECT NAME----------	PROJ COST	TOTAL
MICHIGAN		
AIR NATIONAL GUARD		
SELFRIDGE ANGB		
UPGRADE HEATING SYSTEMS	3,600	
SELFRIDGE ANGB		3,600
MINNESOTA		
AIR NATIONAL GUARD		
MINN-ST PAUL IAP		
UPGRADE REFUELING VECH SHOP & WASH FAC	360	
MINN-ST PAUL IAP		360
ARMY RESERVE		
BUFFALO		
USARC/OMS	4,277	
BUFFALO		4,277
**MINNESOTA		4,637
FAMILY HOUSING		
MISSISSIPPI		
AIR FORCE		
KEESLER AFB		
REPLACE 76 MILITARY FAMILY HOUSING UNITS	(6,500)	
KEESLER AFB		
FAMILY HOUSING		(6,500)
MISSOURI		
AIR FORCE		
WHITEMAN AFB		
INDUSTRIAL WASTEWATER PRETREATMENT FACILIT	1,200	
WHITEMAN AFB		1,200
FAMILY HOUSING		
AIR FORCE		
WHITEMAN AFB		
CONSTRUCT 76 MILITARY FAMILY HOUSING UNITS	(9,451)	
WHITEMAN AFB		
FAMILY HOUSING		(9,451)
**MISSOURI		1,200
FAMILY HOUSING		(9,451)
MONTANA		
AIR FORCE		
MALSTROM AFB		
CONTROL TOWER	2,000	
MALSTROM AFB		2,000
NEBRASKA		
AIR FORCE		
OFFUTT AFB		
INDUSTRIAL WASTEWATER PRETREATMENT FACILIT	1,200	
OFFUTT AFB		1,200
DEFENSE FINANCE AND ACCOUNTING SERVICE		
OFFUTT AFB		
RENOVATE EXISTING FAC FOR ADMIN USE(DBOF)	7,400	
OFFUTT AFB		7,400

FY 1997 MILITARY CONSTRUCTION TOTAL OBLIGATIONAL AUTHORITY AS REQUESTED

ACTIVE, GUARD AND RESERVE FORCES INSIDE THE UNITED STATES ($ THOUSANDS)

DATA AS OF FEB 1995

STATE/COMP./INSTALLATION ----------PROJECT NAME----------	PROJ COST	TOTAL
NEBRASKA		
ARMY NATIONAL GUARD		
HASTINGS		
MRF RETS/MPMG	1,250	
HASTINGS		1,250
AIR NATIONAL GUARD		
LINCOLN MAP		
REMOVE UNDERGROUND FUEL STORAGE TANKS	1,850	
LINCOLN MAP		1,850
FAMILY HOUSING		
AIR FORCE		
OFFUTT AFB		
HOUSING MAINTENANCE FACILITY	(874)	
HOUSING MANAGEMENT FACILITY	(845)	
OFFUTT AFB		
FAMILY HOUSING		(1,719)
**NEBRASKA		11,700
FAMILY HOUSING		(1,719)
NEVADA		
AIR FORCE		
NELLIS AFB		
INDUSTRIAL WASTEWATER PRETREATMENT FACILIT	1,350	
NELLIS AFB		1,350
DEFENSE LOGISTICS AGENCY		
DFSC FALLON NAS		
ADDITION TO HOT REFUELING AREA	2,550	
DFSC FALLON NAS		2,550
**NEVADA		3,900
NEW JERSEY		
AIR FORCE		
MCGUIRE AFB		
SQUADRON OPERATIONS/AIRCRAFT MAINTENANCE U	6,200	
MCGUIRE AFB		6,200
AIR NATIONAL GUARD		
MCGUIRE AFB		
COMPOSITE CE MAINTENANCE FACILITY	3,250	
MCGUIRE AFB		3,250
**NEW JERSEY		9,450
NEW MEXICO		
AIR FORCE		
KIRTLAND AFB		
ADD TO SANITARY SEWER SYSTEM	1,500	
KIRTLAND AFB		1,500
AIR NATIONAL GUARD		
KIRTLAND AFB		
MUNITIONS MAINT. & STORAGE COMPLEX	2,900	
KIRTLAND AFB		2,900
FAMILY HOUSING		
AIR FORCE		
KIRTLAND AFB		
REPLACE 60 MILITARY FAMILY HOUSING UNITS,	(6,339)	
KIRTLAND AFB		
FAMILY HOUSING		(6,339)
**NEW MEXICO		4,400
FAMILY HOUSING		(6,339)

FY 1997 MILITARY CONSTRUCTION TOTAL OBLIGATIONAL AUTHORITY AS REQUESTED

ACTIVE, GUARD AND RESERVE FORCES INSIDE THE UNITED STATES ($ THOUSANDS)

DATA AS OF FEB 1995

STATE/COMP./INSTALLATION ----------PROJECT NAME----------	PROJ COST	TOTAL
NEW YORK		
DEFENSE FINANCE AND ACCOUNTING SERVICE		
GRIFFISS AFB		
RENOVATE EXISTING FAC FOR ADMIN USE(DBOF)	12,600	
GRIFFISS AFB		12,600
AIR NATIONAL GUARD		
FRANCIS S. GABRESKI AIRPORT		
AIRCRAFT WASH AND DEICING FACILITY	630	
FRANCIS S. GABRESKI AIRPORT		630
STEWART AIRPORT		
C-5 FLIGHT SIMULATOR FACILITY	3,000	
STEWART AIRPORT		3,000
**AIR NATIONAL GUARD		3,630
AIR FORCE RESERVE		
NIAGARA FALLS IAP		
FIRE TRAINING SYSTEM	1,600	
NIAGARA FALLS IAP		1,600
**NEW YORK		17,830
NORTH CAROLINA		
NAVY		
CAMP LEJEUNE MARINE CORPS BASE		
BACHELOR ENLISTED QUARTERS	18,150	
PHYSICAL FITNESS CENTER	2,400	
TRAINING RANGE FACILITIES	10,000	
WASTEWATER TREATMENT PLANT (PHASE III)	3,300	
CAMP LEJEUNE MARINE CORPS BASE		33,850
CHERRY POINT MARINE CORPS AIR STATION		
SENSITIVE COMPARTMENTED INFORMATION FAC	1,525	
CHERRY POINT MARINE CORPS AIR STATION		1,525
NEW RIVER MARINE CORPS AIR STATION		
AVIATION ARMAMENT SHOPS	4,350	
CORROSION CONTROL HANGAR	12,100	
NEW RIVER MARINE CORPS AIR STATION		16,450
**NAVY		51,825
AIR FORCE		
POPE AFB		
DORMITORY	4,500	
INDUSTRIAL WASTEWATER PRETREATMENT FACILIT	1,000	
UPGRADE SANITARY SEWER SYSTEM	2,150	
POPE AFB		7,650
SEYMOUR JOHNSON AFB		
F-15 ADD TO SIMULATOR TRAINING SYSTEM SUPP	6,600	
F-15 SQUADRON OPERATIONS/AMU/ ACADEMIC FAC	6,300	
SEYMOUR JOHNSON AFB		12,900
**AIR FORCE		20,550
SPECIAL OPERATIONS COMMAND		
FORT BRAGG		
1ST COMPANY OPS COMPLEX	14,400	
FORT BRAGG		14,400
DEFENSE MEDICAL SUPPORT ACTIVITY		
FORT BRAGG		
CONS TROOP MED CLINIC (SMOKE BOMB HILL)	11,800	

FY 1997 MILITARY CONSTRUCTION TOTAL OBLIGATIONAL AUTHORITY AS REQUESTED

ACTIVE, GUARD AND RESERVE FORCES INSIDE THE UNITED STATES ($ THOUSANDS) — DATA AS OF FEB 1995

STATE/COMP./INSTALLATION ----------PROJECT NAME----------	PROJ COST	TOTAL
NORTH CAROLINA		
DEFENSE MEDICAL SUPPORT ACTIVITY		
FORT BRAGG		
HEALTH/DENTAL CLINIC (COSCOM)	13,200	
#HOSPITAL REPLACEMENT PHASE IV	89,000	
FORT BRAGG		114,000
AUTHORIZED IN PRIOR YEAR		(89,000)
AIR NATIONAL GUARD		
DOUGLAS MAP		
AEROMED EVACUATION TRAINING FACILITY	1,950	
DOUGLAS MAP		1,950
ARMY RESERVE		
FORT BRAGG		
ADD/ALT USARC/OMS	10,266	
FORT BRAGG		10,266
FAMILY HOUSING		
NAVY		
MARINE CORPS BASE CAMP LEJEUNE		
COMMUNITY CENTER	(870)	
MARINE CORPS BASE CAMP LEJEUNE FAMILY HOUSING		(870)
**NORTH CAROLINA		212,991
AUTHORIZED IN PRIOR YEAR		(89,000)
FAMILY HOUSING		(870)
NORTH DAKOTA		
AIR FORCE		
GRAND FORKS AFB		
KC-135 SQUADRON OPERATIONS/ACFT MAINTEN.	6,500	
GRAND FORKS AFB		6,500
DEFENSE LOGISTICS AGENCY		
DFSC MINOT AFB		
REPLACE HYDRANT FUEL SYSTEM (DBOF)	9,926	
DFSC MINOT AFB		9,926
ARMY NATIONAL GUARD		
BISMARCK		
AASF/ARMORY COMPLEX EXP	3,650	
BISMARCK		3,650
FAMILY HOUSING		
AIR FORCE		
GRAND FORKS AFB		
REPLACE 64 MILITARY FAMILY HOUSING UNITS	(9,225)	
GRAND FORKS AFB FAMILY HOUSING		(9,225)
MINOT AFB		
REPLACE 64 MILITARY FAMILY HOUSING UNITS	(10,175)	
MINOT AFB FAMILY HOUSING		(10,175)
**AIR FORCE FAMILY HOUSING		(19,400)
**NORTH DAKOTA		20,076
FAMILY HOUSING		(19,400)
OHIO		
AIR FORCE		
WRIGHT-PATTERSON AFB		
ADD TO AND ALTER ENGINEERING AND RESEARCH	7,500	

AUTHORIZED IN PRIOR YEAR

FY 1997 MILITARY CONSTRUCTION TOTAL OBLIGATIONAL AUTHORITY AS REQUESTED

ACTIVE, GUARD AND RESERVE FORCES INSIDE THE UNITED STATES ($ THOUSANDS) — DATA AS OF FEB 1995

STATE/COMP./INSTALLATION ----------PROJECT NAME----------	PROJ COST	TOTAL
OHIO		
AIR FORCE		
WRIGHT-PATTERSON AFB		
RENOVATE ACQUISITION MANAGEMENT FACILITY.	9,900	
UPGRADE STORM DRAINAGE SYSTEM	2,000	
WRIGHT-PATTERSON AFB		19,400
DEFENSE LOGISTICS AGENCY		
DEFENSE CONSTRUCTION SUPPLY CENTER		
CONSTRUCT ENTRANCE GATE (DBOF)	800	
DEFENSE CONSTRUCTION SUPPLY CENTER		800
AIR NATIONAL GUARD		
MANSFIELD LAHM AIRPORT		
AIRCRAFT DEICING APPRON	490	
MANSFIELD LAHM AIRPORT		490
AIR FORCE RESERVE		
YOUNGSTOWN MAP		
FIRE TRAINING SYSTEM	1,500	
YOUNGSTOWN MAP		1,500
**OHIO		22,190
OKLAHOMA		
AIR FORCE		
ALTUS AFB		
CHILD DEVELOPMENT CENTER COMPLEX	4,000	
ALTUS AFB		4,000
TINKER AFB		
B-2 ADD TO HANGAR FIRE PROTECTION SYSTEM	5,400	
CONSOLIDATED VEHICLE MAINTENANCE FACILITY	8,300	
UPGRADE STORM DRAINAGE SYSTEM	2,880	
TINKER AFB		16,580
**AIR FORCE		20,580
DEFENSE FINANCE AND ACCOUNTING SERVICE		
FORT SILL		
RENOVATE EXISTING FAC FOR ADMIN USE(DBOF)	12,800	
FORT SILL		12,800
DEFENSE LOGISTICS AGENCY		
DFSC ALTIS AFB		
UPGRADE C-5 HYDRANT SYSTEM PH I (DBOF)	3,250	
DFSC ALTIS AFB		3,250
AIR NATIONAL GUARD		
WILL ROGERS WORLD AIRPORT		
ADD TO & ALTER SECURITY POLICE FACILITY	500	
WILL ROGERS WORLD AIRPORT		500
ARMY RESERVE		
MUSKOGEE		
ADD/ALT USARC/OMS	3,125	
MUSKOGEE		3,125
**OKLAHOMA		40,255
OREGON		
ARMY BUDGETED BY DOD		
UMATILLA DEPOT		
AMMUNITION DEMILITARIZATION FAC PHASE III	119,000	
UMATILLA DEPOT		119,000

FY 1997 MILITARY CONSTRUCTION TOTAL OBLIGATIONAL AUTHORITY AS REQUESTED

ACTIVE, GUARD AND RESERVE FORCES INSIDE THE UNITED STATES ($ THOUSANDS) — DATA AS OF FEB 1995

STATE/COMP./INSTALLATION ----------PROJECT NAME----------	PROJ COST	TOTAL
PENNSYLVANIA		
ARMY RESERVE		
GENEVA		
ECS/AMSA/WAREHOUSE	9,382	
GENEVA		9,382
ST MARY'S		
ADD/ALT USARC/OMS	1,848	
ST MARY'S		1,848
**ARMY RESERVE		11,230
RHODE ISLAND		
AIR NATIONAL GUARD		
COVENTRY AGS		
COMMUNICATIONS & ELEC TRAINING FACILITY	2,500	
COVENTRY AGS		2,500
SOUTH CAROLINA		
AIR FORCE		
CHARLESTON AFB		
ADD TO AND ALTER DORMITORIES	5,800	
C-17 ADD TO AND ALTER AIRCRAFT MAINTENANCE	4,600	
C-17 ADD TO AND ALTER APRON/ HYDRANT FUELI	13,200	
C-17 AIRCRAFT MAINTENANCE FACILITY	5,800	
C-17 SQUADRON OPERATIONS/ AIRCRAFT MAINTEN	5,700	
CHARLESTON AFB		35,100
SHAW AFB		
INDUSTRIAL WASTEWATER PRETREATMENT FACILIT	1,000	
SECURITY POLICE OPERATIONS	3,760	
UPGRADE SANITARY SEWER SYSTEM	2,750	
SHAW AFB		7,510
**AIR FORCE		42,610
DEFENSE FINANCE AND ACCOUNTING SERVICE		
CHARLESTON		
RENOVATE EXISTING FAC FOR ADMIN USE(DBOF)	5,900	
CHARLESTON		5,900
DEFENSE LOGISTICS AGENCY		
DFSC SHAW AFB		
RAILROAD JET FUEL FACILITY (DBOF)	2,650	
DFSC SHAW AFB		2,650
**SOUTH CAROLINA		51,160
SOUTH DAKOTA		
AIR FORCE		
ELLSWORTH AFB		
INDUSTRIAL WASTEWATER PRETREATMENT FACILIT	1,350	
UNDERGROUND FUEL STORAGE TANKS	2,050	
ELLSWORTH AFB		3,400
TENNESSEE		
AIR FORCE		
ARNOLD ENGINEERING DEV CENTER		
UPGRADE ENGINE TEST FACILITIES REFRIGERATI	3,800	
ARNOLD ENGINEERING DEV CENTER		3,800
TEXAS		
ARMY		
FORT HOOD		
CLOSE COMBAT TACTICAL TRAINING BUILDING II	5,900	

FY 1997 MILITARY CONSTRUCTION TOTAL OBLIGATIONAL AUTHORITY AS REQUESTED

ACTIVE, GUARD AND RESERVE FORCES INSIDE THE UNITED STATES ($ THOUSANDS) — DATA AS OF FEB 1995

STATE/COMP./INSTALLATION ----------PROJECT NAME----------	PROJ COST	TOTAL
TEXAS		
ARMY		
FORT HOOD		
WHOLE BARRACK COMPLEX RENEWAL	50,000	
FORT HOOD		55,900
NAVY		
INGLESIDE NAVAL STATION		
MAGNETIC RANGE FACILITY AND LAND ACQ	7,700	
INGLESIDE NAVAL STATION		7,700
AIR FORCE		
DYESS AFB		
ADD TO AND ALTER DORMITORIES	5,400	
CONSOLIDATED DINING FACILITY	5,100	
INDUSTRIAL WASTEWATER PRETREATMENT FACILIT	1,150	
DYESS AFB		11,650
KELLY AFB		
UPGRADE STORM DRAINAGE SYSTEM (DBOF)	2,200	
WING SUPPORT FACILITY (DBOF)	3,380	
KELLY AFB		5,580
LACKLAND AFB		
UPGRADE RECRUIT DORMITORY	5,100	
LACKLAND AFB		5,100
RANDOLPH AFB		
JPATS ADD TO AND ALTER BEDDOWN FACILITIES	2,470	
RANDOLPH AFB		2,470
SHEPPARD AFB		
CONSOLIDATED LOGISTICS COMPLEX	9,700	
SHEPPARD AFB		9,700
**AIR FORCE		34,500
DEFENSE MEDICAL SUPPORT ACTIVITY		
FORT BLISS		
LIFE SAFETY UPGRADE	4,950	
FORT BLISS		4,950
FAMILY HOUSING		
ARMY		
FORT HOOD		
FAMILY HOUSING REPLACEMENT CONST (150)	(19,500)	
FORT HOOD		
FAMILY HOUSING		(19,500)
AIR FORCE		
LACKLAND AFB		
REPLACE FAMILY HOUSING MAINTENANCE FACILIT	(350)	
REPLACE FAMILY HOUSING MANAGEMENT OFFICE	(450)	
LACKLAND AFB		
FAMILY HOUSING		(800)
**TEXAS		103,050
FAMILY HOUSING		(20,300)
UTAH		
AIR NATIONAL GUARD		
SALT LAKE CITY IAP		
VEHICLE WASHING FACILITY	460	
SALT LAKE CITY IAP		460

FY 1997 MILITARY CONSTRUCTION TOTAL OBLIGATIONAL AUTHORITY AS REQUESTED

ACTIVE, GUARD AND RESERVE FORCES INSIDE THE UNITED STATES ($ THOUSANDS) — DATA AS OF FEB 1995

STATE/COMP./INSTALLATION ----------PROJECT NAME----------	PROJ COST	TOTAL
UTAH		
NAVY RESERVE		
MARCORESCEN CAMP WILLIAMS (UNG)		
RESERVE CENTER	2,500	
MARCORESCEN CAMP WILLIAMS (UNG)		2,500
**UTAH		2,960
VIRGINIA		
ARMY		
FORT EUSTIS		
WHOLE BARRACK COMPLEX RENEWAL	12,000	
FORT EUSTIS		12,000
NAVY		
NORFOLK NAVAL STATION		
BACHELOR ENLISTED QUARTERS	18,000	
BACHELOR ENLISTED QUARTERS	6,000	
CONTROLLED INDUSTRIAL FACILITY	16,000	
DEPERMING PIERS	10,000	
SHORE INTERMEDIATE MNT ACT ADDN & UPGRADE	8,700	
NORFOLK NAVAL STATION		58,700
QUANTICO MARINE CORPS COMBAT DEV COMMAND		
AMMUNITION STORAGE MAGAZINES (PHASE II)	2,000	
BATTLE STAFF TRAINING FACILITY	3,170	
SANITARY LANDFILL	9,120	
QUANTICO MARINE CORPS COMBAT DEV COMMAND		14,290
**NAVY		72,990
AIR FORCE		
LANGLEY AFB		
ADD TO AND ALTER HQ AIR COMBAT COMMAND FAC	4,600	
INDUSTRIAL WASTEWATER PRETREATMENT FACILIT	1,000	
UPGRADE SANITARY SEWER SYSTEM	2,840	
LANGLEY AFB		8,440
DEFENSE LOGISTICS AGENCY		
DEFENSE GENERAL SUPPLY CENTER		
CONVERT WHSE TO ADMIN SPACE (DBOF)	7,600	
DEFENSE GENERAL SUPPLY CENTER		7,600
DFSC OCEANA NAS		
JET FUEL STORAGE TANK (DBOF)	900	
DFSC OCEANA NAS		900
**DEFENSE LOGISTICS AGENCY		8,500
AIR NATIONAL GUARD		
RICHARD E BYRD IAP		
VEHICLE MAINTENANCE COMPLEX	1,550	
RICHARD E BYRD IAP		1,550
ARMY RESERVE		
FORT EUSTIS		
USARC/OMS	10,592	
FORT EUSTIS		10,592
FAMILY HOUSING		
NAVY		
AEGIS CSC WALLOPS ISLAND VA		
20 UNITS NEW CONST	(3,460)	
AEGIS CSC WALLOPS ISLAND VA FAMILY HOUSING		(3,460)

FY 1997 MILITARY CONSTRUCTION TOTAL OBLIGATIONAL AUTHORITY AS REQUESTED

ACTIVE, GUARD AND RESERVE FORCES INSIDE THE UNITED STATES ($ THOUSANDS)

DATA AS OF FEB 1995

STATE/COMP./INSTALLATION ----------PROJECT NAME----------	PROJ COST	TOTAL
VIRGINIA		
NAVY		
NSGA NORTHWEST VA		
HOUSING OFFICE/SELF HELP/COMM CNTR	(1,130)	
NSGA NORTHWEST VA		
FAMILY HOUSING		(1,130)
**NAVY		
FAMILY HOUSING		(4,590)
**VIRGINIA		114,072
FAMILY HOUSING		(4,590)
WASHINGTON		
ARMY		
FORT LEWIS		
TANK TRAIL EROSION MITIGATION-YAKIMA	2,000	
WHOLE BRIGADE COMPLEX RENEWAL	75,000	
FORT LEWIS		77,000
NAVY		
WHIDBEY ISLAND NAVAL AIR STATION		
BACHELOR ENLISTED QUARTERS	4,500	
WHIDBEY ISLAND NAVAL AIR STATION		4,500
AIR FORCE		
FAIRCHILD AFB		
KC-135 HYDRANT FUELING SYSTEM	10,900	
KC-135 SQUADRON OPERATIONS/ AIRCRAFT MAINT	6,300	
UNDERGROUND FUEL STORAGE TANKS	1,100	
FAIRCHILD AFB		18,300
MCCHORD AFB		
ALTER DORMITORIES	5,400	
MCCHORD AFB		5,400
**AIR FORCE		23,700
FAMILY HOUSING		
NAVY		
NAVAL STATION PUGET SOUND, EVERETT		
100 UNITS NEW CONSTRUCTION	(15,650)	
NAVAL STATION PUGET SOUND, EVERETT		
FAMILY HOUSING		(15,650)
NAVAL SUBMARINE BASE BANGOR		
HSG OFFICE	(1,150)	
NAVAL SUBMARINE BASE BANGOR		
FAMILY HOUSING		(1,150)
**NAVY		
FAMILY HOUSING		(16,800)
AIR FORCE		
MCCHORD AFB		
REPLACE 50 MILITARY FAMILY HOUSING UNITS	(7,359)	
MCCHORD AFB		
FAMILY HOUSING		(7,359)
**WASHINGTON		105,200
FAMILY HOUSING		(24,159)
WISCONSIN		
DEFENSE LOGISTICS AGENCY		
DEF REUTILIZATION & MARKETING SPARTA		
DRMO CONSOLIDATION (DBOF)	6,500	
DEF REUTILIZATION & MARKETING SPARTA		6,500

FY 1997 MILITARY CONSTRUCTION TOTAL OBLIGATIONAL AUTHORITY AS REQUESTED

ACTIVE, GUARD AND RESERVE FORCES
INSIDE THE UNITED STATES
($ THOUSANDS)

DATA AS OF FEB 1995

STATE/COMP./INSTALLATION ----------PROJECT NAME----------	PROJ COST	TOTAL
WISCONSIN		
DEFENSE LOGISTICS AGENCY		
DFSC TRUAX FIELD		
JET FUEL STORAGE COMPLEX (DBOF)	3,750	
DFSC TRUAX FIELD		3,750

**DEFENSE LOGISTICS AGENCY		10,250
AIR NATIONAL GUARD		
VOLK FIELD		
MUNITIONS STORAGE IGLOOS	700	
UPGRADE SANITARY SEWER SYSTEM	320	
VOLK FIELD		1,020
AIR FORCE RESERVE		
BILLY MITCHELL FIELD		
IMPROVE STORM DRAINAGE SYSTEM	950	
MEDICAL TRAINING FACILITY	2,333	
BILLY MITCHELL FIELD		3,283

**WISCONSIN		14,553
CONUS CLASSIFIED		
SPECIAL OPERATIONS COMMAND		
CLASSIFIED LOCATION		
AFSOC SQ OPS/AMU	5,000	
CLASSIFIED LOCATION		5,000
DEFENSE LEVEL ACTIVITIES		
OSD MILCON		
CLASSIFIED LOCATION	25,500	
OSD MILCON		25,500
AIR FORCE RESERVE		
AIR FORCE RESERVE		
K-135 OPERATIONS AND TRAINING FACILITIES	4,980	
AIR FORCE RESERVE		4,980

**CONUS CLASSIFIED		35,480
CONUS UNSPECIFIED		
AIR NATIONAL GUARD		
SITE 1		
UPGRADE MAINTENANCE HANGAR	4,000	
SITE 1		4,000

FY 1997 MILITARY CONSTRUCTION TOTAL OBLIGATIONAL AUTHORITY AS REQUESTED

ACTIVE, GUARD AND RESERVE FORCES
INSIDE THE UNITED STATES
($ THOUSANDS)

DATA AS OF FEB 1995

STATE/COMP./INSTALLATION ----------PROJECT NAME----------	PROJ COST	TOTAL
TOTALS		
ARMY		361,479
FAMILY HOUSING		(99,000)
NAVY		391,724
FAMILY HOUSING		(208,576)
AIR FORCE		490,684
FAMILY HOUSING		(161,531)
DEFENSEWIDE		736,687
AUTHORIZED IN PRIOR YEAR		(89,000)
INSIDE THE UNITED STATES		1,980,574
AUTHORIZED IN PRIOR YEAR		(89,000)
FAMILY HOUSING		(469,107)

FY 1997 MILITARY CONSTRUCTION TOTAL OBLIGATIONAL AUTHORITY AS REQUESTED

ACTIVE, GUARD AND RESERVE FORCES
SPECIFIED OUTSIDE THE UNITED STATES
($ THOUSANDS)

DATA AS OF FEB 1995

STATE/COMP./INSTALLATION ----------PROJECT NAME----------	PROJ COST	TOTAL
BAHRAIN ISLAND		
DEFENSE MEDICAL SUPPORT ACTIVITY		
ASU BAHRAIN		
MEDICAL/DENTAL CLINIC	4,600	
ASU BAHRAIN		4,600
GERMANY		
AIR FORCE		
SPANGDAHLEM AB		
ADD TO AND ALTER WATER STORAGE AND DISTRIB	3,400	
SPANGDAHLEM AB		3,400
GREENLAND		
AIR FORCE		
THULE AB		
SOLID WASTE DISPOSAL FACILITIES	5,300	
THULE AB		5,300
GUAM		
DEFENSE LOGISTICS AGENCY		
DEF FUEL SUPPORT POINT GUAM		
REPLACE POL PIPELINE (DBOF)	18,000	
DEF FUEL SUPPORT POINT GUAM		18,000
ITALY		
DEFENSE LOGISTICS AGENCY		
DFSC SIGONELLA NAS		
EXTEND HYDRANT FUEL SYSTEM (DBOF)	4,200	
DFSC SIGONELLA NAS		4,200
KOREA		
ARMY		
COMBINED FIELD ARMY		
WHOLE BARRACKS COMPLEX RENEWAL	14,000	
COMBINED FIELD ARMY		14,000
EASTERN CORRIDOR		
WHOLE BARRACKS COMPLEX RENEWAL	16,000	
EASTERN CORRIDOR		16,000
**ARMY		30,000
KWAJALEIN		
BALLISTIC MISSILE DEFENSE ORAGNIZATION		
MISSILE RANGE		
THAAD GBR TMD TEST FACILITIES	4,700	
MISSILE RANGE		4,700
PUERTO RICO		
NAVY		
ROOSEVELT ROADS NAVAL STATION		
BACHELOR ENLISTED QUARTERS	18,490	
ROOSEVELT ROADS NAVAL STATION		18,490
AIR NATIONAL GUARD		
PUERTO RICO IAP		
REFUELING VEHICLE SHOP & PAINT BAY	460	
PUERTO RICO IAP		460
**PUERTO RICO		18,950

FY 1997 MILITARY CONSTRUCTION TOTAL OBLIGATIONAL AUTHORITY AS REQUESTED

ACTIVE, GUARD AND RESERVE FORCES SPECIFIED OUTSIDE THE UNITED STATES ($ THOUSANDS)

DATA AS OF FEB 1995

STATE/COMP./INSTALLATION ----------PROJECT NAME----------	PROJ COST	TOTAL
SPAIN		
DEFENSE LOGISTICS AGENCY		
DFSC MORON AIR BASE		
REPLACE HYDRANT FUEL SYSTEM (DBOF)	11,300	
DFSC MORON AIR BASE		11,300
TURKEY		
AIR FORCE		
INCIRLIK AB		
ADD TO AND ALTER PHYSICAL FITNESS CENTER	1,800	
INCIRLIK AB		1,800
UNITED KINGDOM		
NAVY		
ST MAWGAN JOINT MARITIME COMMUNICATION CTR		
PHYSICAL FITNESS CTR ADDN AND ALTERATIONS	4,930	
ST MAWGAN JOINT MARITIME COMMUNICATION CTR		4,930
AIR FORCE		
RAF CROUGHTON		
FIRE STATION	1,800	
RAF CROUGHTON		1,800
RAF LAKENHEATH		
ADD TO AND ALTER WATER DISTRIBUTION MAINS	4,150	
DORMITORY	3,800	
RAF LAKENHEATH		7,950
RAF MILDENHALL		
DORMITORY	6,400	
RAF MILDENHALL		6,400
**AIR FORCE		16,150
NATIONAL SECURITY AGENCY		
MENWITH HILL STATION		
UPGRADE POWER AVAILABILITY	613	
MENWITH HILL STATION		613
**UNITED KINGDOM		21,693
OVERSEAS CLASSIFIED		
AIR FORCE		
OVERSEAS CLASSIFIED		
MUNITIONS STORAGE IGLOOS	7,000	
SPECIAL TACTICAL UNIT DETACHMENT FACILITY	4,226	
WAR READINESS MATERIAL WAREHOUSE	2,300	
WAR READINESS MATERIAL WAREHOUSES	6,000	
OVERSEAS CLASSIFIED		19,526
OVERSEAS VARIOUS		
ARMY		
VARIOUS LOCATIONS		
STRATEGIC LOGISTICAL PREPO COMPLEX PH II	64,000	
VARIOUS LOCATIONS		64,000

FY 1997 MILITARY CONSTRUCTION TOTAL OBLIGATIONAL AUTHORITY AS REQUESTED

ACTIVE, GUARD AND RESERVE FORCES
SPECIFIED OUTSIDE THE UNITED STATES
($ THOUSANDS)

DATA AS OF FEB 1995

STATE/COMP./INSTALLATION ----------PROJECT NAME----------	PROJ COST	TOTAL
TOTALS		
ARMY		94,000
NAVY		23,420
AIR FORCE		46,636
DEFENSEWIDE		43,413
SPECIFIED OUTSIDE THE UNITED STATES		207,469

FY 1997 MILITARY CONSTRUCTION TOTAL OBLIGATIONAL AUTHORITY AS REQUESTED

ACTIVE, GUARD AND RESERVE FORCES — DATA AS OF FEB 1995
UNSPECIFIED WORLDWIDE
($ THOUSANDS)

STATE/COMP./INSTALLATION ----------PROJECT NAME----------	PROJ COST	TOTAL
WORLDWIDE UNSPECIFIED		
NATO INFRASTRUCTURE		
DEFENSE LEVEL ACTIVITIES	199,000	
NATO INFRASTRUCTURE		199,000
BASE REALIGNMENT & CLOSURE PART II		
DEFENSE LEVEL ACTIVITIES	255,957	
BASE REALIGNMENT & CLOSURE PART II		255,957
BASE REALIGNMENT & CLOSURE ACCT PART III		
DEFENSE LEVEL ACTIVITIES	1,291,764	
BASE REALIGNMENT & CLOSURE ACCT PART III		1,291,764
BASE REALIGNMENT & CLOSURE ACCT PART IV		
DEFENSE LEVEL ACTIVITIES	824,200	
BASE REALIGNMENT & CLOSURE ACCT PART IV		824,200
ACCESS ROADS		
NAVY	500	
ACCESS ROADS		500
CONTINGENCY CONSTRUCTION		
DEFENSE LEVEL ACTIVITIES	6,766	
CONTINGENCY CONSTRUCTION		6,766
UNSPECIFIED MINOR CONSTRUCTION		
ARMY	5,000	
NAVY	7,400	
AIR FORCE	9,328	
SPECIAL OPERATIONS COMMAND	1,700	
BALLISTIC MISSILE DEFENSE ORAGNIZATION	2,040	
DEFENSE LEVEL ACTIVITIES	3,200	
JOINT CHIEFS OF STAFF	6,384	
DOD DEPENDENT SCHOOLS	2,000	
DEFENSE MEDICAL SUPPORT ACTIVITY	6,200	
ARMY NATIONAL GUARD	5,500	
AIR NATIONAL GUARD	4,100	
ARMY RESERVE	3,800	
AIR FORCE RESERVE	4,326	
UNSPECIFIED MINOR CONSTRUCTION		60,978
PLANNING AND DESIGN		
ARMY	64,382	
NAVY	46,410	
AIR FORCE	32,417	
ARMY BUDGETED BY DOD	8,700	
SPECIAL OPERATIONS COMMAND	6,591	
DEFENSE FINANCE AND ACCOUNTING SERVICE	3,100	
BALLISTIC MISSILE DEFENSE ORAGNIZATION	1,895	
DEFENSE LEVEL ACTIVITIES	11,000	
DEFENSE LOGISTICS AGENCY	5,900	
DEFENSE MEDICAL SUPPORT ACTIVITY	27,700	
ARMY NATIONAL GUARD	3,900	
AIR NATIONAL GUARD	4,725	
ARMY RESERVE	3,480	
NAVY RESERVE	111	
AIR FORCE RESERVE	2,400	
PLANNING AND DESIGN		222,711
ENERGY CONSERVATION IMPROVEMENT PROGRAM		
DEFENSE LEVEL ACTIVITIES	50,000	
ENERGY CONSERVATION IMPROVEMENT PROGRAM		50,000
ARMY - HOST NATION SUPPORT		
ARMY	20,000	
ARMY - HOST NATION SUPPORT		20,000
WORLDWIDE UNSPECIFIED		2,931,876

FY 1997 MILITARY CONSTRUCTION TOTAL OBLIGATIONAL AUTHORITY AS REQUESTED

ACTIVE, GUARD AND RESERVE FORCES — DATA AS OF FEB 1995
UNSPECIFIED WORLDWIDE
($ THOUSANDS)

STATE/COMP./INSTALLATION ----------PROJECT NAME----------	PROJ COST	TOTAL
TOTALS		
ARMY		106,062
NAVY		54,421
AIR FORCE		57,296
DEFENSEWIDE		2,714,097
UNSPECIFIED WORLDWIDE		2,931,876

FY 1997 FAMILY HOUSING TOTAL OBLIGATIONAL AUTHORITY AS REQUESTED

DATA AS OF FEB 1995

($ THOUSANDS)

STATE/COMP./INSTALLATION ----------PROJECT NAME----------	PROJ COST	TOTAL
ARMY		
NEW CONSTRUCTION		
ALABAMA		
REDSTONE ARSENAL		
FAMILY HOUSING REPLACEMENT CONST (118)	12,000	
REDSTONE ARSENAL		12,000
COLORADO		
FORT CARSON		
FAMILY HOUSING REPLACEMENT CONST (148)	19,000	
FORT CARSON		19,000
HAWAII		
SCHOFIELD BARRACKS		
FAMILY HOUSING REPLACEMENT CONST (190)	30,000	
SCHOFIELD BARRACKS		30,000
KENTUCKY		
FORT KNOX		
FAMILY HOUSING REPLACEMENT CONST (150)	18,500	
FORT KNOX		18,500
TEXAS		
FORT HOOD		
FAMILY HOUSING REPLACEMENT CONST (150)	19,500	
FORT HOOD		19,500
WORLDWIDE UNSPECIFIED		
VARIOUS WORLDWIDE LOCATIONS		
FAMILY HOUSING CONSTRUCTION (5)	1,000	
VARIOUS WORLDWIDE LOCATIONS		1,000
NEW CONSTRUCTION		100,000
CONSTRUCTION IMPROVEMENTS	66,570	66,570
PLANNING	5,343	5,343
TOTAL FAMILY HOUSING, ARMY CONSTRUCTION		171,913
OPERATING EXPENSES		
FURNISHINGS ACCOUNT	49,985	
MANAGEMENT ACCOUNT	86,401	
MISCELLANEOUS ACCOUNT	1,273	
SERVICES ACCOUNT	54,246	
UTILITIES ACCOUNT	274,890	
OPERATING EXPENSES		466,795
LEASING	249,930	249,930
MAINTENANCE OF REAL PROPERTY	511,114	511,114
TOTAL FAMILY HOUSING, ARMY OPERATIONS		1,227,839
INTEREST PAYMENTS	11	11
TOTAL FAMILY HOUSING, ARMY DEBT		11
GRAND TOTAL FAMILY HOUSING, ARMY		1,399,763
NAVY		
NEW CONSTRUCTION		
ARIZONA		
MCAS YUMA		
COMMUNITY CENTER	747	
MCAS YUMA		747

FY 1997 FAMILY HOUSING TOTAL OBLIGATIONAL AUTHORITY AS REQUESTED

DATA AS OF FEB 1995

($ THOUSANDS)

STATE/COMP./INSTALLATION ----------PROJECT NAME----------	PROJ COST	TOTAL
NAVY		
NEW CONSTRUCTION		
CALIFORNIA		
LEMOORE NAVAL AIR STATION		
276 UNITS REPLACEMENT	41,522	
LEMOORE NAVAL AIR STATION		41,522
MARCOR AIR-GRND COMB CTR TWENTYNINE PALMS		
COMMUNITY CENTER	2,180	
HOUSING OFFICE	1,500	
MARCOR AIR-GRND COMB CTR TWENTYNINE PALMS		3,680
MARINE CORPS BASE CAMP PENDLETON		
133 UNITS NEW CONSTRUCTION	20,000	
MARINE CORPS BASE CAMP PENDLETON		20,000
PUBLIC WORKS CENTER SAN DIEGO		
366 UNITS REPLACEMENT	52,352	
PUBLIC WORKS CENTER SAN DIEGO		52,352
CALIFORNIA		117,554
HAWAII		
MARINE CORPS AIR STATION, KANEOHE BAY		
54 UNITS NEW CONSTRUCTION	11,920	
MARINE CORPS AIR STATION, KANEOHE BAY		11,920
NAVAL COMPLEX, OAHU		
300 UNITS REPLACEMENT	54,810	
NAVAL COMPLEX, OAHU		54,810
HAWAII		66,730
MARYLAND		
NAVAL AIR TEST CENTER PATUXENT RIVER		
COMMUNITY CENTER	1,285	
NAVAL AIR TEST CENTER PATUXENT RIVER		1,285
NORTH CAROLINA		
MARINE CORPS BASE CAMP LEJEUNE		
COMMUNITY CENTER	870	
MARINE CORPS BASE CAMP LEJEUNE		870
VIRGINIA		
AEGIS CSC WALLOPS ISLAND VA		
20 UNITS NEW CONST	3,460	
AEGIS CSC WALLOPS ISLAND VA		3,460
NSGA NORTHWEST VA		
HOUSING OFFICE/SELF HELP/COMM CNTR	1,130	
NSGA NORTHWEST VA		1,130
VIRGINIA		4,590
WASHINGTON		
NAVAL STATION PUGET SOUND, EVERETT		
100 UNITS NEW CONSTRUCTION	15,650	
NAVAL STATION PUGET SOUND, EVERETT		15,650
NAVAL SUBMARINE BASE BANGOR		
HSG OFFICE	1,150	
NAVAL SUBMARINE BASE BANGOR		1,150
WASHINGTON		16,800
NEW CONSTRUCTION		208,576
CONSTRUCTION IMPROVEMENTS	190,819	190,819
PLANNING	27,674	27,674
TOTAL FAMILY HOUSING, NAVY CONSTRUCTION		427,069

FY 1997 FAMILY HOUSING TOTAL OBLIGATIONAL AUTHORITY AS REQUESTED

DATA AS OF FEB 1995

($ THOUSANDS) STATE/COMP./INSTALLATION ----------PROJECT NAME----------	PROJ COST	TOTAL
NAVY		
OPERATING EXPENSES		
FURNISHINGS ACCOUNT	35,067	
MANAGEMENT ACCOUNT	98,066	
MISCELLANEOUS ACCOUNT	1,290	
SERVICES ACCOUNT	66,551	
UTILITIES ACCOUNT	189,839	
OPERATING EXPENSES		390,813
LEASING	114,710	114,710
MAINTENANCE OF REAL PROPERTY	521,085	521,085
TOTAL FAMILY HOUSING, NAVY OPERATIONS		1,026,608
MORTGAGE INSURANCE PREMIUMS	80	80
TOTAL FAMILY HOUSING, NAVY DEBT		80
GRAND TOTAL FAMILY HOUSING, NAVY		1,453,757
AIR FORCE		
NEW CONSTRUCTION		
ALASKA		
EIELSON AFB		
CONSTRUCT FIRE STATION	2,950	
REPLACE 72 MILITARY FAMILY HOUSING UNITS	22,029	
EIELSON AFB		24,979
CALIFORNIA		
BEALE AFB		
REPLACE MILITARY FAMILY HOUSING, PHASE 2	9,649	
BEALE AFB		9,649
EDWARDS AFB		
REPLACE 60 MILITARY FAMILY HOUSING UNITS,	9,413	
EDWARDS AFB		9,413
TRAVIS AFB		
REPLACE 70 MILITARY FAMILY HOUSING UNITS	8,631	
TRAVIS AFB		8,631
VANDENBERG AFB		
REPLACE 138 MILITARY FAMILY HOUSING UNITS	19,499	
VANDENBERG AFB		19,499
CALIFORNIA		47,192
DISTRICT OF COLUMBIA		
BOLLING AFB		
REPLACE 40 MILITARY FAMILY HOUSING UNITS	5,000	
BOLLING AFB		5,000
FLORIDA		
MACDILL AFB		
REPLACE 70 MILITARY FAMILY HOUSING UNITS	8,959	
MACDILL AFB		8,959
PATRICK AFB		
REPLACE 35 MILITARY FAMILY HOUSING UNITS,	3,103	
PATRICK AFB		3,103
FLORIDA		12,062
GEORGIA		
ROBINS AFB		
REPLACE 60 MILITARY FAMILY HOUSING UNITS,	5,763	
ROBINS AFB		5,763

FY 1997 FAMILY HOUSING TOTAL OBLIGATIONAL AUTHORITY AS REQUESTED

DATA AS OF FEB 1995

($ THOUSANDS)

STATE/COMP./INSTALLATION ----------PROJECT NAME----------	PROJ COST	TOTAL
AIR FORCE		
NEW CONSTRUCTION		
LOUISIANA		
BARKSDALE AFB		
REPLACE 108 MILITARY FAMILY HOUSING UNITS,	10,092	
BARKSDALE AFB		10,092
MASSACHUSETTS		
HANSCOM AFB		
REPLACE 32 MILITARY FAMILY HOUSING UNITS,	4,875	
HANSCOM AFB		4,875
MISSISSIPPI		
KEESLER AFB		
REPLACE 76 MILITARY FAMILY HOUSING UNITS	6,500	
KEESLER AFB		6,500
MISSOURI		
WHITEMAN AFB		
CONSTRUCT 76 MILITARY FAMILY HOUSING UNITS	9,451	
WHITEMAN AFB		9,451
NEBRASKA		
OFFUTT AFB		
HOUSING MAINTENANCE FACILITY	874	
HOUSING MANAGEMENT FACILITY	845	
OFFUTT AFB		1,719
NEW MEXICO		
KIRTLAND AFB		
REPLACE 60 MILITARY FAMILY HOUSING UNITS,	6,339	
KIRTLAND AFB		6,339
NORTH DAKOTA		
GRAND FORKS AFB		
REPLACE 64 MILITARY FAMILY HOUSING UNITS	9,225	
GRAND FORKS AFB		9,225
MINOT AFB		
REPLACE 64 MILITARY FAMILY HOUSING UNITS	10,175	
MINOT AFB		10,175
NORTH DAKOTA		19,400
TEXAS		
LACKLAND AFB		
REPLACE FAMILY HOUSING MAINTENANCE FACILIT	350	
REPLACE FAMILY HOUSING MANAGEMENT OFFICE	450	
LACKLAND AFB		800
WASHINGTON		
MCCHORD AFB		
REPLACE 50 MILITARY FAMILY HOUSING UNITS	7,359	
MCCHORD AFB		7,359
NEW CONSTRUCTION		161,531
CONSTRUCTION IMPROVEMENTS	87,817	87,817
PLANNING	9,590	9,590
TOTAL FAMILY HOUSING, AIR FORCE CONSTRUCTION		258,938
OPERATING EXPENSES		
FURNISHINGS ACCOUNT	43,278	
MANAGEMENT ACCOUNT	45,454	
MISCELLANEOUS ACCOUNT	5,711	
SERVICES ACCOUNT	33,412	

FY 1997 FAMILY HOUSING TOTAL OBLIGATIONAL AUTHORITY AS REQUESTED

DATA AS OF FEB 1995

($ THOUSANDS)

STATE/COMP./INSTALLATION -----PROJECT NAME-----	PROJ COST	TOTAL
AIR FORCE		
OPERATING EXPENSES		
UTILITIES ACCOUNT	196,957	
OPERATING EXPENSES		324,812
LEASING	118,048	118,048
MAINTENANCE OF REAL PROPERTY	414,267	414,267
TOTAL FAMILY HOUSING, AIR FORCE OPERATIONS		857,127
MORTGAGE INSURANCE PREMIUMS	30	30
TOTAL FAMILY HOUSING, AIR FORCE DEBT		30
GRAND TOTAL FAMILY HOUSING, AIR FORCE		1,116,095
DEFENSE LEVEL ACTIVITIES		
CONSTRUCTION IMPROVEMENTS	294,900	294,900
TOTAL FAMILY HOUSING, ASDA		294,900
NATIONAL SECURITY AGENCY		
CONSTRUCTION IMPROVEMENTS	50	50
OPERATING EXPENSES		
FURNISHINGS ACCOUNT	884	
MANAGEMENT ACCOUNT	70	
MISCELLANEOUS ACCOUNT	35	
SERVICES ACCOUNT	355	
UTILITIES ACCOUNT	400	
OPERATING EXPENSES		1,744
LEASING	11,374	11,374
MAINTENANCE OF REAL PROPERTY	224	224
TOTAL FAMILY HOUSING, NSA		13,392
DEF INTELLIGENCE AGENCY		
OPERATING EXPENSES		
FURNISHINGS ACCOUNT	2,327	
OPERATING EXPENSES		2,327
LEASING	14,079	14,079
TOTAL FAMILY HOUSING, DIA		16,406
DEFENSE LOGISTICS AGENCY		
CONSTRUCTION IMPROVEMENTS	3,804	3,804
OPERATING EXPENSES		
FURNISHINGS ACCOUNT	25	
MANAGEMENT ACCOUNT	166	
SERVICES ACCOUNT	32	
UTILITIES ACCOUNT	340	
OPERATING EXPENSES		563
MAINTENANCE OF REAL PROPERTY	504	504
TOTAL FAMILY HOUSING, DLA		4,871
GRAND TOTAL FAMILY HOUSING, DEFENSE		329,569

FY 1997 FAMILY HOUSING TOTAL OBLIGATIONAL AUTHORITY AS REQUESTED

DATA AS OF FEB 1995

($ THOUSANDS)

STATE/COMP./INSTALLATION ----------PROJECT NAME----------	PROJ COST	TOTAL
ARMY		
PAYMENT TO HOMEOWNERS	11,097	11,097
OTHER OPERATING COSTS	31,004	31,004
ACQUISITION OF REAL PROPERTY	124,239	124,239
ARMY		166,340

FY 1994 CONSTRUCTION ANNEX TOTAL OBLIGATIONAL AUTHORITY AS ENACTED

TOTAL CONSTRUCTION ANNEX
BY TYPE OF FACILITY
($ THOUSANDS)

DATA AS OF FEB 1995

SUMMARY BY FACILITY	ARMY	NAVY	AIR FORCE	DEF. AGS.	TOTAL
OPERATIONAL FACILITIES	47,312	113,850	296,474	56,700	514,336
AUTHORIZED IN PRIOR YEAR			(5,000)		(5,000)
TRAINING FACILITIES	338,895	60,518	87,940	4,800	492,153
MAINTENANCE & PRODUCTION FACILITIES	288,268	19,300	152,263	20,540	480,371
R&D FACILITIES	43,650	30,650	97,647	19,950	191,897
AUTHORIZED IN PRIOR YEAR				(15,000)	(15,000)
SUPPLY FACILITIES	29,372	31,130	41,856	35,190	137,548
HOSPITAL AND MEDICAL FACILITIES				205,810	205,810
AUTHORIZED IN PRIOR YEAR				(142,000)	(142,000)
ADMINSTRATIVE FACILITIES	25,041	6,610	58,663	5,200	95,514
TROOP HOUSING FACILITIES	288,200	132,250	135,700	20,000	576,150
COMMUNITY FACILITIES	42,501	29,770	52,860	41,000	166,131
UTILITY FACILITIES	45,930	60,980	137,624	34,755	279,289
REAL ESTATE	-15,988	-4,465	-31,046	-13,663	-65,162
AIR POLLUTION ABATEMENT			3,330		3,330
WATER POLLUTION ABATEMENT		139,140	178,260		317,400
NOISE POLLUTION ABATEMENT			800		800
ENERGY CONSERVATION			4,850	50,000	54,850
UNSPECIFIED MINOR CONSTRUCTION	19,100	6,542	14,748	23,658	64,048
PLANNING & DESIGN	126,716	65,732	78,739	44,405	315,592
BASE REALIGNMENT & CLOSURE ACCT PART I				77,830	77,830
BASE REALIGNMENT & CLOSURE ACCT PART II				1,438,942	1,438,942
BASE REALIGNMENT & CLOSURE ACCT PART III				636,308	636,308
NATO INFRASTRUCTURE				148,417	148,417
FAMILY HOUSING CONSTRUCTION	228,885	370,208	187,035	159	786,287
FAMILY HOUSING DEBT	17	88	21		126
FAMILY HOUSING OPERATIONS	1,069,172	771,967	790,891	26,337	2,658,367
HOMEOWNERS ASSISTANCE	146,376				146,376
*** TOTAL ***	2,723,447	1,834,270	2,288,655	2,876,338	9,722,710
AUTHORIZED IN PRIOR YEAR			(5,000)	(157,000)	(162,000)

FY 1994 CONSTRUCTION ANNEX TOTAL OBLIGATIONAL AUTHORITY AS ENACTED

SUMMARY BY FACILITY	----TOTAL MILCON----- BY TYPE OF FACILITY ($ THOUSANDS) ARMY	NAVY	AIR FORCE	DATA AS OF FEB 1995 DEF. AGS.	TOTAL
OPERATIONAL FACILITIES	47,312	113,850	296,474	56,700	514,336
AUTHORIZED IN PRIOR YEAR			(5,000)		(5,000)
TRAINING FACILITIES	338,895	60,518	87,940	4,800	492,153
MAINTENANCE & PRODUCTION FACILITIES	288,268	19,300	152,263	20,540	480,371
R&D FACILITIES	43,650	30,650	97,647	19,950	191,897
AUTHORIZED IN PRIOR YEAR				(15,000)	(15,000)
SUPPLY FACILITIES	29,372	31,130	41,856	35,190	137,548
HOSPITAL AND MEDICAL FACILITIES				205,810	205,810
AUTHORIZED IN PRIOR YEAR				(142,000)	(142,000)
ADMINSTRATIVE FACILITIES	25,041	6,610	58,663	5,200	95,514
TROOP HOUSING FACILITIES	288,200	132,250	135,700	20,000	576,150
COMMUNITY FACILITIES	42,501	29,770	52,860	41,000	166,131
UTILITY FACILITIES	45,930	60,980	137,624	34,755	279,289
REAL ESTATE	-15,988	-4,465	-31,046	-13,663	-65,162
AIR POLLUTION ABATEMENT			3,330		3,330
WATER POLLUTION ABATEMENT		139,140	178,260		317,400
NOISE POLLUTION ABATEMENT			800		800
ENERGY CONSERVATION			4,850	50,000	54,850
UNSPECIFIED MINOR CONSTRUCTION	19,100	6,542	14,748	23,658	64,048
PLANNING & DESIGN	126,716	65,732	78,739	44,405	315,592
BASE REALIGNMENT & CLOSURE ACCT PART I				77,830	77,830
BASE REALIGNMENT & CLOSURE ACCT PART II				1,438,942	1,438,942
BASE REALIGNMENT & CLOSURE ACCT PART III				636,308	636,308
NATO INFRASTRUCTURE				148,417	148,417
*** TOTAL ***	1,278,997	692,007	1,310,708	2,849,842	6,131,554
AUTHORIZED IN PRIOR YEAR			(5,000)	(157,000)	(162,000)

FY 1994 CONSTRUCTION ANNEX TOTAL OBLIGATIONAL AUTHORITY AS ENACTED

SUMMARY BY FACILITY	----ACTIVE FORCES---- BY TYPE OF FACILITY ($ THOUSANDS) ARMY	NAVY	AIR FORCE	DATA AS OF FEB 1995 DEF. AGS.	TOTAL
OPERATIONAL FACILITIES	47,312	113,850	236,536	56,700	454,398
AUTHORIZED IN PRIOR YEAR			(5,000)		(5,000)
TRAINING FACILITIES	53,992	44,310	19,917	4,800	123,019
MAINTENANCE & PRODUCTION FACILITIES	197,200	16,800	105,003	20,540	339,543
R&D FACILITIES	43,650	30,650	97,647	19,950	191,897
AUTHORIZED IN PRIOR YEAR				(15,000)	(15,000)
SUPPLY FACILITIES	26,350	29,230	25,416	35,190	116,186
HOSPITAL AND MEDICAL FACILITIES				205,810	205,810
AUTHORIZED IN PRIOR YEAR				(142,000)	(142,000)
ADMINSTRATIVE FACILITIES	23,650	4,590	58,663	5,200	92,103
TROOP HOUSING FACILITIES	288,200	132,250	112,880	20,000	553,330
COMMUNITY FACILITIES	42,501	29,770	44,100	41,000	157,371
UTILITY FACILITIES	45,930	60,980	121,624	34,755	263,289
REAL ESTATE	-5,869	-3,839	-23,007	-13,663	-46,378
AIR POLLUTION ABATEMENT			1,830		1,830
WATER POLLUTION ABATEMENT		139,140	120,595		259,735
ENERGY CONSERVATION			4,850	50,000	54,850
UNSPECIFIED MINOR CONSTRUCTION	12,000	5,500	6,844	23,658	48,002
PLANNING & DESIGN	109,441	64,373	63,882	44,405	282,101
BASE REALIGNMENT & CLOSURE ACCT PART I				77,830	77,830
BASE REALIGNMENT & CLOSURE ACCT PART II				1,438,942	1,438,942
BASE REALIGNMENT & CLOSURE ACCT PART III				636,308	636,308
NATO INFRASTRUCTURE				148,417	148,417
*** TOTAL ***	884,357	667,604	996,780	2,849,842	5,398,583
AUTHORIZED IN PRIOR YEAR			(5,000)	(157,000)	(162,000)

FY 1994 CONSTRUCTION ANNEX TOTAL OBLIGATIONAL AUTHORITY AS ENACTED

NATIONAL GUARD FORCES
BY TYPE OF FACILITY
($ THOUSANDS)

DATA AS OF FEB 1995

SUMMARY BY FACILITY	ARMY	NAVY	AIR FORCE	DEF. AGS.	TOTAL
OPERATIONAL FACILITIES			29,595		29,595
TRAINING FACILITIES	191,967		44,773		236,740
MAINTENANCE & PRODUCTION FACILITIES	91,068		43,160		134,228
SUPPLY FACILITIES	3,022		9,040		12,062
ADMINSTRATIVE FACILITIES	1,391				1,391
TROOP HOUSING FACILITIES			22,820		22,820
COMMUNITY FACILITIES			8,760		8,760
UTILITY FACILITIES			14,500		14,500
REAL ESTATE	-7,568		-6,177		-13,745
AIR POLLUTION ABATEMENT			1,500		1,500
WATER POLLUTION ABATEMENT			57,665		57,665
NOISE POLLUTION ABATEMENT			800		800
UNSPECIFIED MINOR CONSTRUCTION	5,000		4,000		9,000
PLANNING & DESIGN	10,271		10,868		21,139
*** TOTAL ***	295,151		241,304		536,455

FY 1994 CONSTRUCTION ANNEX TOTAL OBLIGATIONAL AUTHORITY AS ENACTED

SUMMARY BY FACILITY	---RESERVE FORCES---- BY TYPE OF FACILITY ($ THOUSANDS) ARMY	NAVY	AIR FORCE		DATA AS OF FEB 1995 TOTAL
OPERATIONAL FACILITIES			30,343		30,343
TRAINING FACILITIES	92,936	16,208	23,250		132,394
MAINTENANCE & PRODUCTION FACILITIES		2,500	4,100		6,600
SUPPLY FACILITIES		1,900	7,400		9,300
ADMINSTRATIVE FACILITIES		2,020			2,020
UTILITY FACILITIES			1,500		1,500
REAL ESTATE	-2,551	-626	-1,862		-5,039
UNSPECIFIED MINOR CONSTRUCTION	2,100	1,042	3,904		7,046
PLANNING & DESIGN	7,004	1,359	3,989		12,352
*** TOTAL ***	99,489	24,403	72,624		196,516

FY 1994 CONSTRUCTION ANNEX TOTAL OBLIGATIONAL AUTHORITY AS ENACTED

TOT GUARD AND RESERVE
BY TYPE OF FACILITY
($ THOUSANDS)

DATA AS OF FEB 1995

SUMMARY BY FACILITY	ARMY	NAVY	AIR FORCE		TOTAL
OPERATIONAL FACILITIES			59,938		59,938
TRAINING FACILITIES	284,903	16,208	68,023		369,134
MAINTENANCE & PRODUCTION FACILITIES	91,068	2,500	47,260		140,828
SUPPLY FACILITIES	3,022	1,900	16,440		21,362
ADMINSTRATIVE FACILITIES	1,391	2,020			3,411
TROOP HOUSING FACILITIES			22,820		22,820
COMMUNITY FACILITIES			8,760		8,760
UTILITY FACILITIES			16,000		16,000
REAL ESTATE	-10,119	-626	-8,039		-18,784
AIR POLLUTION ABATEMENT			1,500		1,500
WATER POLLUTION ABATEMENT			57,665		57,665
NOISE POLLUTION ABATEMENT			800		800
UNSPECIFIED MINOR CONSTRUCTION	7,100	1,042	7,904		16,046
PLANNING & DESIGN	17,275	1,359	14,857		33,491
*** TOTAL ***	394,640	24,403	313,928		732,971

FY 1994 CONSTRUCTION ANNEX TOTAL OBLIGATIONAL AUTHORITY AS ENACTED

---FAMILY HOUSING---

($ THOUSANDS) DATA AS OF FEB 1995

SUMMARY BY FACILITY	ARMY	NAVY	AIR FORCE	DEF. AGS.	TOTAL
FAMILY HOUSING CONSTRUCTION	228,885	370,208	187,035	159	786,287
FAMILY HOUSING DEBT	17	88	21		126
FAMILY HOUSING OPERATIONS	1,069,172	771,967	790,891	26,337	2,658,367
HOMEOWNERS ASSISTANCE	146,376				146,376
*** TOTAL ***	1,444,450	1,142,263	977,947	26,496	3,591,156

FY 1994 MILITARY CONSTRUCTION TOTAL OBLIGATIONAL AUTHORITY AS ENACTED

ACTIVE GUARD AND RESERVE FORCES
BY TYPE OF FACILITY
($ THOUSANDS)

DATA AS OF FEB 1995

INSTALLATION	LOCATION	PROJECT	TOTAL
OPERATIONAL FACILITIES			
ARMY			
FORT RUCKER	ALABAMA	OPERATIONS FACILITY	1,150
FORT RUCKER	ALABAMA	PETROLEUM LAB AND FUEL STORAGE	5,800
FORT RICHARDSON	ALASKA	JOINT MOBILITY CENTER	10,000
FORT HUACHUCA	ARIZONA	BATTALION HEADQUARTERS	4,800
FITZSIMONS ARMY MEDICAL CENTER	COLORADO	DIAL CENTRAL OFFICE	4,400
FT STEWART/HUNTER AAF	GEORGIA	CARGO HANDLING FACILITY	4,200
SCHOFIELD BARRACKS	HAWAII	OPERATIONS FACILITY	2,600
FORT CAMPBELL	KENTUCKY	AIRFIELD IMPROVEMENTS	3,950
FORT LEONARD WOOD	MISSOURI	OPERATIONS FACILITY	1,000
FORT JACKSON	SOUTH CAROLINA	OPERATIONS FACILITY	1,100
FORT HOOD	TEXAS	BATTALION COMMAND AND CONTROL FACILITY	5,600
FORT BELVOIR	VIRGINIA	OPERATIONS FACILITY	860
CLASSIFIED LOCATIONS	CONUS CLASSIFIED	CLASSIFIED PROJECT	1,852
**ARMY			47,312
NAVY			
CAMP PENDLETON MARINE CORPS AIR STATION	CALIFORNIA	RADAR AIR TRAFFIC CONTROL FACILITY ADDN	3,850
CAMP PENDLETON MARINE CORPS BASE	CALIFORNIA	ARMORY ARMORY	
NEW LONDON NAVAL SUBMARINE BASE	CONNECTICUT	SUBMARINE DRYDOCK PIER	4,200
JACKSONVILLE NAVAL AIR STATION	FLORIDA	HELICOPTER WASH AND RINSE FACILITY	620
PENSACOLA NAVAL AIR STATION	FLORIDA	RADAR AIR TRAFFIC CONTROL CENTER	1,880
KINGS BAY NAVAL SUBMARINE BASE	GEORGIA	DIKES	3,730
PEARL HARBOR NAVAL SUBMARINE BASE	HAWAII	SUBMARINE BERTING WHARF	26,000
PEARL HARBOR UNDERSEA SURV US PACIFIC FLT	HAWAII	BERTHING PIER	16,780
WAIPAHU NAV INACTIVE SHIP MAINTENANCE FAC	HAWAII	INACTIVE SHIPS PIER	2,620
EARLE NAVAL WEAPONS STATION	NEW JERSEY	EXPLOSIVES HOLDING YARD - DBOF	1,290
EARLE NAVAL WEAPONS STATION	NEW JERSEY	MATERIALS HNDLG EQUIP SERV CTR ALT - DBOF	420
CHERRY POINT MARINE CORPS AIR STATION	NORTH CAROLINA	COMMUNICATIONS CENTER	3,460
PHILADELPHIA NAV INACTIVE SHIP MAINT FAC	PENNSYLVANIA	BERTHING WHARF IMPROVEMENTS (INCR II)	8,660
OCEANA NAVAL AIR STATION	VIRGINIA	FUEL STORAGE TANKS REPLACEMENT	1,800
EVERETT NAVAL STATION	WASHINGTON	BREAKWATER	22,200
NAVAL STATION	GUAM	EXPLOSIVE ORDNANCE DISPOSAL OPERS FAC	12,500
**NAVY			113,850
AIR FORCE			
MAXWELL AFB	ALABAMA	*EXTEND RUNWAY/UPGRADE	5,000
MAXWELL AFB	ALABAMA	TAXIWAY/RAMP	3,800
ELMENDORF AFB	ALASKA	JOINT MOBILITY COMPLEX	5,500
ELMENDORF AFB	ALASKA	RUNWAY REPAIR	2,500
LITTLE ROCK AFB	ARKANSAS	ALTER JRTC OPERATIONS CENTER	1,050
MCCLELLAN AFB	CALIFORNIA	REPAIR AIRCRAFT PARKING APRON	3,100
MCCLELLAN AFB	CALIFORNIA	UPGRADE AIRCRAFT PARKING APRON	3,600
VANDENBERG AFB	CALIFORNIA	SLFI-TPQ-18 RADAR FACILITY	2,408
BUCKLEY ANG BASE	COLORADO	COMMUNICATION DATA PROCESSING FACILITY	39,000
PETERSON AFB	COLORADO	ADD TO AND ALTER INTEGRATION SUPPORT FAC	16,400
EGLIN AFB	FLORIDA	UPGRADE HYDRANT FUELING SYSTEM	4,550
MOODY AFB	GEORGIA	AIRCRAFT PARKING/ACCESS TAXIWAY	9,000
ROBINS AFB	GEORGIA	J-STARS ADD TO AND ALTER OPERATIONS CMPLX	4,100
ROBINS AFB	GEORGIA	J-STARS SQUADRON OPERATIONS/AMU	7,500
HICKAM AFB	HAWAII	MILSTAR COMMUNICATIONS GROUND TERMINAL	2,200
MCCONNELL AFB	KANSAS	CONTROL TOWER CAB	900
BARKSDALE AFB	LOUISIANA	ADD TO AND ALTER APRON/HYDRANT FUELING SYS	10,000
ANDREWS AFB	MARYLAND	AIR FREIGHT TERMINAL - DBOF T	4,400
FORT GEORGE MEADE	MARYLAND	ADD TO AIR FORCE SENIOR SCOUT OPS FAC	1,450
COLUMBUS AFB	MISSISSIPPI	UPGRADE AIRFIELD LIGHTING	2,900
WHITEMAN AFB	MISSOURI	B-2 AIRCRAFT APRON/TAXIWAY UPGRADE	3,400

* AUTHORIZED FOR APPROP IN PRIOR YEAR

FY 1994 MILITARY CONSTRUCTION TOTAL OBLIGATIONAL AUTHORITY AS ENACTED

ACTIVE GUARD AND RESERVE FORCES
BY TYPE OF FACILITY
($ THOUSANDS)

DATA AS OF FEB 1995

INSTALLATION	LOCATION	PROJECT	TOTAL
OPERATIONAL FACILITIES			
AIR FORCE			
WHITEMAN AFB	MISSOURI	B-2 HYDRANT FUELING SYSTEM LOOP, PH II	2,700
OFFUTT AFB	NEBRASKA	REPAIR AIRFIELD PAVEMENTS AND LIGHTING	8,700
NELLIS AFB	NEVADA	BOMBER LIVE ORDANCE LOADING APRON	4,100
CANNON AFB	NEW MEXICO	SOUND SUPPRESSOR SUPPORT PAD	665
GRAND FORKS AFB	NORTH DAKOTA	UPGRADE AIRFIELD PAVEMENT	10,200
GRAND FORKS AFB	NORTH DAKOTA	UPGRADE HYDRANT FUELING SYSTEM	3,250
MINOT AFB	NORTH DAKOTA	REPAIR RUNWAYS & TAXIWAYS	8,500
WRIGHT-PATTERSON AFB	OHIO	FIRE STATION	1,230
ALTUS AFB	OKLAHOMA	C-17 FIRE STATION - DBOF	780
TINKER AFB	OKLAHOMA	ALTER HYDRANT FUELING SYSTEM	4,129
VANCE AFB	OKLAHOMA	REPAIR AIRFIELD PAVEMENT (RAMP)	5,000
VANCE AFB	OKLAHOMA	UPGRADE AIRFIELD LIGHTING	3,300
SHAW AFB	SOUTH CAROLINA	CONTROL TOWER	2,700
DYESS AFB	TEXAS	UPGRADE HYDRANT FUELING SYSTEM, PHASE II	9,500
KELLY AFB	TEXAS	C-17 ENGINEERING TEST LABORATORY	2,600
KELLY AFB	TEXAS	UPGRADE TAXIWAY	3,550
LAUGHLIN AFB	TEXAS	FIRE STATION	2,400
LAUGHLIN AFB	TEXAS	UPGRADE AIRFIELD LIGHTING	3,000
LAUGHLIN AFB	TEXAS	UPGRADE AIRFIELD PAVEMENT	3,032
RANDOLPH AFB	TEXAS	CONTROL TOWER	2,652
LANGLEY AFB	VIRGINIA	FIRE STATION	3,850
F E WARREN AFB	WYOMING	REMOTE MISSILE CREW FACILITIES	3,800
F E WARREN AFB	WYOMING	RENOVATE SECURITY POLICE OPERATIONS	6,000
CLASSIFIED LOCATION	CONUS CLASSIFIED	OMEGA FACILITIES	2,600
CLASSIFIED LOCATION	CONUS CLASSIFIED	SPECIAL TACTICAL UNIT DETENTION FACILITY	5,540
**AIR FORCE			236,536
AUTHORIZED FOR APPROP IN PRIOR YEAR			(5,000)
SPECIAL OPERATIONS COMMAND			
EGLIN AUX FIELD 9	FLORIDA	SQN OPS MC130 (H)	2,750
EGLIN AUX FIELD 9	FLORIDA	SQN OPS MH60G(1SOW)-H	2,250
FORT CAMPBELL	KENTUCKY	AIRCRAFT PARKING APRON	2,650
FORT CAMPBELL	KENTUCKY	ARMY SOA BN, HQS	4,300
NAVAL AMPHIBIOUS BASE, LITTLE CREEK	VIRGINIA	SOF SPECBOATRON PBC SUPPORT	7,500
**SPECIAL OPERATIONS COMMAND			19,450
NATIONAL SECURITY AGENCY			
FORT MEADE	MARYLAND	SUPERCOMPUTER FACILITY	35,000
**NATIONAL SECURITY AGENCY			35,000
DEFENSE LOGISTICS AGENCY			
DEFENSE FUEL SUPPORT POINT PEARL HARBOR	HAWAII	POL LABORATORY FACILITY	2,250
**DEFENSE LOGISTICS AGENCY			2,250
AIR NATIONAL GUARD			
TUCSON IAP	ARIZONA	ADD TO AND ALTER COMMUNICATIONS FACILITY	700
GREATER WILMINGTON AIRPORT	DELAWARE	COMMUNICATIONS FACILITY	900
CAPITAL MAP	ILLINOIS	UPGRADE RUNWAY	2,300
DES MOINES MAP	IOWA	JET FUEL STORAGE COMPLEX	4,000
ROSECRANS MEMORIAL AIRPORT	MISSOURI	JET FUEL STORAGE	4,000
KIRTLAND AFB	NEW MEXICO	ALTER MAINTENANCE SHOPS	345
NIAGARA FALLS INTERNATIONAL AIRPORT	NEW YORK	ALTER KC-135 OPERATIONS FACILITIES	1,650
SCHENECTADY AIRPORT ANG	NEW YORK	REPLACE UNDERGROUND FUEL STORAGE TANKS	1,050
TOLEDO EXPRESS AIRPORT	OHIO	TAXIWAY & ARM/DEARM PADS	1,950
KINGSLEY FIELD	OREGON	REPAIR RUNWAY/TAXIWAY	8,500

FY 1994 MILITARY CONSTRUCTION TOTAL OBLIGATIONAL AUTHORITY AS ENACTED

ACTIVE GUARD AND RESERVE FORCES
BY TYPE OF FACILITY
($ THOUSANDS)

DATA AS OF FEB 1995

INSTALLATION	LOCATION	PROJECT	TOTAL
OPERATIONAL FACILITIES			
AIR NATIONAL GUARD			
MCENTIRE	SOUTH CAROLINA	UPGRADE AIRFIELD LIGHTING AND PAVEMENT	4,200
**AIR NATIONAL GUARD			29,595
AIR FORCE RESERVE			
ANDREWS AFB	MARYLAND	REPLACE AIRCRAFT PARKING APRON	13,373
NIAGARA FALLS IAP	NEW YORK	BASE COMMUNICATIONS CENTER	2,100
YOUNGSTOWN MAP	OHIO	WIDEN AIRCRAFT PARKING APRON	7,850
BILLY MITCHELL FIELD	WISCONSIN	UPGRADE BASE FUELS COMPLEX	1,800
AIR FORCE RESERVE	CONUS CLASSIFIED	CONSTRUCT AIRCRAFT PARKING APRON	8,000
UNSPECIFIED WORLDWIDE LOCATIONS	WORLDWIDE UNSPECIFIED	GENERAL REDUCTION	-2,780
**AIR FORCE RESERVE			30,343
** OPERATIONAL FACILITIES			514,336
AUTHORIZED FOR APPROP IN PRIOR YEAR			(5,000)
TRAINING FACILITIES			
ARMY			
FORT CARSON	COLORADO	RANGE CONTROL FACILITY	4,050
FORT BENNING	GEORGIA	MULTIPURPOSE MACHINE GUN RANGE	1,650
FORT RILEY	KANSAS	BATTLE SIMULATION FACILITY	4,742
FORT KNOX	KENTUCKY	MULTIPURPOSE TRAINING RANGE	4,150
ABERDEEN PROVING GROUND	MARYLAND	APPLIED INSTRUCTION FACILITY	14,000
FORT SILL	OKLAHOMA	ENVIRONMENTAL TRAINING CENTER	3,700
FORT JACKSON	SOUTH CAROLINA	RANGE UPGRADE	1,600
FORT HOOD	TEXAS	CLOSE COMBAT TACTICAL TRAINER FACILITY	7,500
FORT LEE	VIRGINIA	APPLIED INSTRUCTION FACILITY	12,600
**ARMY			53,992
NAVY			
CAMP PENDLETON MARINE CORPS BASE	CALIFORNIA	AUTOMATED FIELD FIRING RANGE	1,340
TWENTYNINE PALMS MARCORP AIR-GRND COMB CTR	CALIFORNIA	ACADEMIC INSTRUCTION BUILDING ADDITION	600
TWENTYNINE PALMS MARCORP AIR-GRND COMB CTR	CALIFORNIA	ANTI-ARMOR TRACKING RANGE MODERNIZATION	3,940
TWENTYNINE PALMS MARCORP AIR-GRND COMB CTR	CALIFORNIA	MULTIPURPOSE RANGE CPX	200
PENSACOLA NAVAL AIR STATION	FLORIDA	WATER SURVIVAL TRAINING FACILITY	4,540
KINGS BAY TRIDENT TRAINING FACILITY	GEORGIA	FIRE FIGHTING TRAINING FACILITY	3,870
ANNAPOLIS NAVAL ACADEMY	MARYLAND	PHYISCAL THERAPY/TRAINING/MEETING CENTER	6,500
CAMP LEJEUNE MARINE CORPS BASE	NORTH CAROLINA	MULTI-PURPOSE TRAINING RANGE	5,300
CHERRY POINT MARINE CORPS AIR STATION	NORTH CAROLINA	AIRCRAFT MAINTENANCE TRAINING FACILITY	4,040
CHESAPEAKE MARINE CORPS SEC FORCE BATTN NW	VIRGINIA	ACADEMIC INSTRUCTION BUILDING	2,320
CHESAPEAKE MARINE CORPS SEC FORCE BATTN NW	VIRGINIA	INDOOR RANGE COMPLEX	3,060
QUANTICO MARINE CORPS COMBAT DEV COMMAND	VIRGINIA	ACADEMIC INSTRUCTION BUILDING ALTERATIONS	5,000
QUANTICO MARINE CORPS COMBAT DEV COMMAND	VIRGINIA	ANTI-ARMOR TRACKING & LIVE FIRE RANGE	3,600
**NAVY			44,310
AIR FORCE			
MAXWELL AFB	ALABAMA	AIR FORCE QUALITY CENTER	4,650
ANDREWS AFB	MARYLAND	FIRE TRAINING FACILITY - DBOF	1,000
ALTUS AFB	OKLAHOMA	C-17 ADD TO FLT SIMULAT TRN FAC - DBOF T	2,850
LACKLAND AFB	TEXAS	TRAINING SERVICES FACILITIES	5,717
SHEPPARD AFB	TEXAS	ENJJPT ALTER FLIGHT TRAINING FACILITY	2,200
FAIRCHILD AFB	WASHINGTON	INTELLIGENCE TECHNICAL TRAINING FACILITY	3,500
**AIR FORCE			19,917
DEFENSE MEDICAL SUPPORT ACTIVITY			
FORT SAM HOUSTON	TEXAS	COMBAT MEDIC TRAINING COMPLEX	1,400

FY 1994 MILITARY CONSTRUCTION TOTAL OBLIGATIONAL AUTHORITY AS ENACTED

ACTIVE GUARD AND RESERVE FORCES
BY TYPE OF FACILITY
($ THOUSANDS)

DATA AS OF FEB 1995

INSTALLATION	LOCATION	PROJECT	TOTAL
TRAINING FACILITIES			
DEFENSE MEDICAL SUPPORT ACTIVITY			
FORT SAM HOUSTON	TEXAS	NCO ACADEMY-AMEDD CENTER AND SCHOOL	3,400
**DEFENSE MEDICAL SUPPORT ACTIVITY			4,800
ARMY NATIONAL GUARD			
CAMP NAVAJO (BELLMONT)	ARIZONA	TNG SITE, WATER FILTRATION SYS	1,000
MARANA	ARIZONA	WAATS, DINING FAC/DORM EXPAN	2,919
CAMP ROBINSON	ARKANSAS	ARMORY	3,205
CAMP ROBINSON	ARKANSAS	RANGE, MODIFIED RECORD FIRE	907
CAMP ROBINSON	ARKANSAS	TRNG SITE, SEWER IMPROV	4,424
CAMP ROBINSON	ARKANSAS	TRNG SITE, UTILITIES RENOV	1,275
FRESNO	CALIFORNIA	ARMORY/OMS	8,147
VAN NUYS	CALIFORNIA	ARMORY, ADDITION/ALTERATION	6,518
KAUAI	HAWAII	RANGE, KNOWN DISTANCE UPGRADE	334
MOLOKAI	HAWAII	ARMORY	1,050
OAHU	HAWAII	ARMORY ADDITION	4,300
GOWEN FIELD	IDAHO	COMBAT VEHICLE TRANSITION CMPLX	5,044
HOMEDALE	IDAHO	ARMORY	1,157
ROCK ISLAND	ILLINOIS	ARMORY/OMS	3,310
CAMP ATTERBURY	INDIANA	RANGE, INF SQUAD BATTLE CRSE	1,156
CAMP ATTERBURY	INDIANA	RANGE, MOD RECORD FIRE UPGRADE	654
CAMP ATTERBURY	INDIANA	TNG SITE, HQ/BKS/ADM/SPLY PH6B	7,545
CAMP ATTERBURY	INDIANA	TNG SITE, MILITARY ED FAC	5,400
EVANSVILLE	INDIANA	ARMORY/OMS	6,050
LAFAYETTE	INDIANA	ARMORY/OMS	3,116
CAMP DODGE	IOWA	ARMORY	4,550
CAMP DODGE	IOWA	TNG SITE, BN COMPLEX, PHASE II	3,800
NICKELL BARRACKS	KANSAS	TNG SITE, COMPLEX PHASE I	6,168
FORT RILEY	KANSAS	XTNG SITE, WASH FACILITY	3,398
NORWAY	MAINE	ARMORY EXPAN/REHAB	1,380
HAGERSTOWN	MARYLAND	ARMORY ADDITION/ALTERATION	1,776
TOWSON	MARYLAND	ARMORY ALT/ADD	2,823
CAMP RIPLEY	MINNESOTA	RANGE, MPRC (HEAVY)	3,185
INVER GROVE HEIGHTS	MINNESOTA	ARMORY/OMS	4,571
VARIOUS LOCATIONS	MINNESOTA	ARMORY ADDITIONS/ALTERATIONS	3,225
CAMP MC CAIN	MISSISSIPPI	TNG SITE IMPROVEMENTS	5,500
CAMP SHELBY	MISSISSIPPI	REGION MIL ED FAC PHASE I	6,000
CAMP SHELBY	MISSISSIPPI	TNG SITE, TANK WASH	5,000
GREENVILLE	MISSISSIPPI	ARMORY,	2,230
JACKSON	MISSISSIPPI	ARMORY, HQ STARC	2,550
VARIOUS	MISSISSIPPI	ARMORY (6)	5,204
FORT CROWDER	MISSOURI	TRNG SITE, TROOP MED TRNG FACIL	386
FORT LEONARDWOOD	MISSOURI	ARMORY/OMS	2,349
POPLAR BLUFF	MISSOURI	ARMORY/OMS	2,842
FT WM HENRY HARRISON	MONTANA	TRNG SITE, MED UNIT TNG FACIL	501
LAS VEGAS	NEVADA	ARMORY	1,430
WHITE SANDS MISSILE BASE	NEW MEXICO	TNG SITE, TACTICAL SITE	1,995
CAMP GRAFTON (DEVILS LAKE)	NORTH DAKOTA	RANGE, MOD RECORD FIRE (MRF)	1,038
CAMP GRAFTON (DEVILS LAKE)	NORTH DAKOTA	TRNG SITE, HEATING PLANT ADD	1,826
RICKENBACHER	OHIO	TNG SITE, CONSOLIDATED MESS	1,250
FREDERICK	OKLAHOMA	ARMORY	1,200
FORT INDIANTOWN GAP	PENNSYLVANIA	TNG SITE, MIL ED FACILITY	9,200
JOHNSTOWN	PENNSYLVANIA	ARMORY (AVN) ADDITION	3,309
COLUMBIA	SOUTH CAROLINA	LAND ACQUISITION	950
FORT JACKSON	SOUTH CAROLINA	TNG SITE, TRACK VEH WASH RACK	1,009
SIOUX FALLS	SOUTH DAKOTA	ARMORY ADDITION	3,700
CAMDEN	TENNESSEE	ARMORY ADDITION/ALTERATION	714
ELIZABETHTON	TENNESSEE	AAUSB ARMORY UNIT STORAGE BLDG	100
JEFFERSON CITY	TENNESSEE	ARMORY	952

FY 1994 MILITARY CONSTRUCTION TOTAL OBLIGATIONAL AUTHORITY AS ENACTED

ACTIVE GUARD AND RESERVE FORCES
BY TYPE OF FACILITY
($ THOUSANDS)

DATA AS OF FEB 1995

INSTALLATION	LOCATION	PROJECT	TOTAL
TRAINING FACILITIES			
ARMY NATIONAL GUARD			
MILAN	TENNESSEE	ARMORY ADDITION	1,357
SEVIERVILLE	TENNESSEE	ARMORY	1,352
SMYRNA	TENNESSEE	ARMORY, (MEDICAL)	3,934
TIPTONVILLE	TENNESSEE	ARMORY, ADDITION/ALTERATION	1,157
WAVERLY	TENNESSEE	ARMORY ADDITION/ALTERATION	587
CORPUS CHRISTI	TEXAS	ARMORY ADDITION/ALTERATION	2,719
WESLACO	TEXAS	ARMORY/OMS	5,567
CAMP WILLIAMS	UTAH	RANGE, INFANTRY SQUAD BATTLE CRSE	1,066
CAMP WILLIAMS	UTAH	RANGE, MAC	850
COLCHESTER	VERMONT	TNG SITE, MIL ED FACILITY	3,200
JERICHO	VERMONT	TRNG SITE, SUPPORT FACILITIES	304
YAKIMA TRAINING CENTER (YAKIMA)	WASHINGTON	RANGE, MACHINE GUN MODIFICATION	1,527
CAMP GUERNSEY	WYOMING	TNG SITE, BKS PHASE III	3,338
UNSPECIFIED LOCATIONS	WORLDWIDE VARIOUS	INDOOR RANGE MODERNIZATION	637
VARIOUS LOCATIONS	WORLDWIDE VARIOUS	ARMORY UNIT STORAGE BUILDINGS	750
**ARMY NATIONAL GUARD			191,967
AIR NATIONAL GUARD			
ABSTON ANG STATION	ALABAMA	COMMUNICATIONS & ELECTRONICS TRAINING FAC	693
LITTLE ROCK AFB	ARKANSAS	AIRCREW TRAINING FACILITY	3,750
BARKING SANDS	HAWAII	FORWARD AIR CONTROL POINT FACILITY	8,500
GOWEN FIELD	IDAHO	IDAHO TRAINING RANGE	6,700
MCCONNELL AFB	KANSAS	ALTER MEDICAL TRAINING AND TELECOM	890
BARNES MAP	MASSACHUSETTS	ALTER OPS/TRAINING FACILITY	600
JEFFERSON BARRACKS ANG SITE	MISSOURI	ALTER COMMUNICATIONS ELECTRONICS TRNG FAC	2,800
RENO IAP	NEVADA	FLIGHT SIMULATOR BUILDING	400
MANSFIELD LAHM AIRPORT	OHIO	MEDICAL TRAINING & DINING FACILITY	2,900
TOLEDO EXPRESS AIRPORT	OHIO	ADD/ALTER OPERATIONS & TRAINING FACILITY	1,800
STATE COLLEGE, ANG STATION	PENNSYLVANIA	COMM ELECTRONICS TRAINING COMPLEX	9,700
JOE FOSS FIELD	SOUTH DAKOTA	ALTER COMPOSITE OPERATIONS & TRAINING FAC	350
ALCOA AIR NATIONAL GUARD STATION	TENNESSEE	ADAL COMMUNICATIONS ELECTRONICS TRNG FAC	1,300
MCGHEE-TYSON AIRPORT	TENNESSEE	PMEC ADMINISTRATIVE SUPPORT FACILITY	2,200
SALT LAKE CITY IAP	UTAH	ADAL COMMUNICATION AND ELECTRONICS TRNG	850
SALT LAKE CITY IAP	UTAH	ALTER COMPOSITE SUPPORT FACILITY	950
E WV REGIONAL APT (MARTINSBURG)	WEST VIRGINIA	ADD TO AERIAL PORT TRAINING FACILITY	390
**AIR NATIONAL GUARD			44,773
ARMY RESERVE			
BIRMINGHAM	ALABAMA	BATTLE PROJECTION CENTER	4,719
FORT RICHARDSON	ALASKA	ADD/ALT USARC/OMS/DS-GS/AMSA/STORAGE	10,324
FORT MCPHERSON	GEORGIA	USAR COMD HQ BLDG, PH 1	15,000
ARGONNE	ILLINOIS	USARC/OMS	10,381
NEW ORLEANS	LOUISIANA	LAND ACQUISITION	645
FORT DIX	NEW JERSEY	UPGRADE RANGE # 65	2,700
MOREHEAD CITY	NORTH CAROLINA	ADD/ALT USARC/OMS/AMSA (MARINE)	9,335
COLUMBUS	OHIO	USARC/OMS/AMSA/DS-GS	14,701
FORT JACKSON	SOUTH CAROLINA	USARC/OMS/DS	10,428
FORT LEWIS	WASHINGTON	USARC/OMS/AMSA/ECS/WAREHOUSE	14,703
**ARMY RESERVE			92,936
NAVY RESERVE			
NAVAL STATION SAN DIEGO	CALIFORNIA	CBU FACILITY	1,000
NAVAL STATION PEARL HARBOR	HAWAII	CBU ADDITION	500
NRRC DETROIT	MICHIGAN	MCRC IMPROVEMENTS NAVMARCORESCEN DETROIT	698
NRRC DETROIT	MICHIGAN	RESCEN ADDITION	3,100
NRC KEARNY	NEW JERSEY	MCRC IMPROVEMENTS WEST TRENTON	264

FY 1994 MILITARY CONSTRUCTION TOTAL OBLIGATIONAL AUTHORITY AS ENACTED

ACTIVE GUARD AND RESERVE FORCES
BY TYPE OF FACILITY
($ THOUSANDS)

DATA AS OF FEB 1995

INSTALLATION	LOCATION	PROJECT	TOTAL
TRAINING FACILITIES			
NAVY RESERVE			
NRC KEARNY	NEW JERSEY	RESCEN A/C	800
NETC NEWPORT	RHODE ISLAND	CBU ADDITION	500
NMCRC CHATTANOOGA	TENNESSEE	RESCEN REPLACEMENT	3,690
MCRC DAMNECK	VIRGINIA	ELECTRONIC MAINT SHOP	1,000
JOINT TRAINING CENTER EVERETT	WASHINGTON	RESCEN REPLACEMENT	2,550
JOINT TRAINING CENTER EVERETT	WASHINGTON	RESCEN REPLACEMENT BANSOR	1,456
NMCRC GREEN BAY	WISCONSIN	RESCEN ADDITION	650
**NAVY RESERVE			16,208
AIR FORCE RESERVE			
TRAVIS AFB	CALIFORNIA	AERIAL PORT TRAINING FACILITY	3,050
TRAVIS AFB	CALIFORNIA	ALTER RESERVE OPERATIONS AND TRAINING FAC	4,000
MACDILL AFB	FLORIDA	AEROMEDICAL EVACUATION FACILITY	3,500
DOBBINS AFB	GEORGIA	ADD TO AND ALTER SECURITY POLICE OPS W/ANG	1,900
DOBBINS AFB	GEORGIA	FLIGHT SIMULATION CENTER	6,000
WESTOVER AFB	MASSACHUSETTS	MEDICAL TRAINING FACILITY	2,600
KIRTLAND AFB	NEW MEXICO	CIVIL ENGINEERING TRAINING FACILITY	900
GREATER PITTSBURGH IAP	PENNSYLVANIA	OFF BASE FIRING RANGE	1,300
**AIR FORCE RESERVE			23,250
** TRAINING FACILITIES			492,153
MAINTENANCE & PRODUCTION FACILITIES			
ARMY			
ANNISTON ARMY DEPOT	ALABAMA	AMMUNITION DEMILITARIZATION FAC PH IV	110,900
FORT KNOX	KENTUCKY	MAINTENANCE FACILITY	12,200
FORT BRAGG	NORTH CAROLINA	TACTICAL EQUIPMENT SHOP	7,100
FORT BRAGG	NORTH CAROLINA	TACTICAL EQUIPMENT SHOP	23,000
FORT SILL	OKLAHOMA	CENTRAL VEHICLE WASH FACILITY	7,600
FORT BLISS	TEXAS	CONSOLIDATED MAINTENANCE FACILITY	14,000
FORT BLISS	TEXAS	TACTICAL EQUIPMENT SHOP	2,800
FORT BLISS	TEXAS	TACTICAL EQUIPMENT SHOP	12,800
FORT HOOD	TEXAS	TACTICAL EQUIPMENT SHOP	5,300
TOOELE ARMY DEPOT	UTAH	TREATY COMPLIANCE FACILITY	1,500
**ARMY			197,200
NAVY			
CRANE NAVAL SURFACE WARFARE CENTER DIV	INDIANA	ORDNANCE ENVIRONMENTAL TEST FACILITY	9,600
PATUXENT RIVER NAVAL AIR STATION	MARYLAND	JET ENGINE TEST CELL	4,900
PHILADELPHIA NAVAL SHIPYARD	PENNSYLVANIA	ASBESTOS REMOVAL FACILITY	2,300
**NAVY			16,800
AIR FORCE			
ELMENDORF AFB	ALASKA	CORROSION CONTROL FACILITY	5,975
ELMENDORF AFB	ALASKA	MUNITIONS MAINTENANCE FACILITY	2,100
DAVIS-MONTHAN AFB	ARIZONA	VEHICLE MAINTENANCE FACILITY	5,500
LITTLE ROCK AFB	ARKANSAS	ADAL ENGINE INSP & REPAIR SHOP - DBOF T	1,200
TRAVIS AFB	CALIFORNIA	AIRCRAFT GENERAL PURPOSE MAINTENANCE SHOP	11,200
PETERSON AFB	COLORADO	PRECISION MEASUREMENT EQUIPMENT LABORATORY	2,200
US AIR FORCE ACADEMY	COLORADO	ENHANCED FLIGHT SCREENER HANGARS	3,800
EGLIN AFB	FLORIDA	AIRCRAFT ENGINE TEST FACILITY	1,600
EGLIN AFB	FLORIDA	VEHICLE MAINTENANCE/WAREHOUSE FACILITIES	2,600
PATRICK AFB	FLORIDA	ALTER MAINTENANCE HANGAR	407
MOODY AFB	GEORGIA	AIRCRAFT MAINTENANCE DOCK	4,700

FY 1994 MILITARY CONSTRUCTION TOTAL OBLIGATIONAL AUTHORITY AS ENACTED

ACTIVE GUARD AND RESERVE FORCES
BY TYPE OF FACILITY
($ THOUSANDS)

DATA AS OF FEB 1995

INSTALLATION	LOCATION	PROJECT	TOTAL
MAINTENANCE & PRODUCTION FACILITIES			
AIR FORCE			
ROBINS AFB	GEORGIA	J-STARS ADD TO AND ALTER MAINT COMPLEX	9,300
WHITEMAN AFB	MISSOURI	B-2 AIRCRAFT MAINTENANCE DOCK	14,500
WHITEMAN AFB	MISSOURI	B-2 VEHICLE MAINTENANCE FACILITY	1,700
MALMSTROM AFB	MONTANA	BASE ENGINEERING COMPLEX - DBOF	6,200
HOLLOMAN AFB	NEW MEXICO	FIGHTER MAINTENANCE FACILITY	1,900
ALTUS AFB	OKLAHOMA	C-17 ADD TO ACFT MAINT FACILITY - DBOF T	3,300
ELLSWORTH AFB	SOUTH DAKOTA	ALTER AIRCRAFT MAINTENANCE DOCK	630
ELLSWORTH AFB	SOUTH DAKOTA	ALTER WASH AND CORROSION CONTROL FACILITY	6,200
GOODFELLOW AFB	TEXAS	BASE ENGINEERING COMPLEX	3,700
KELLY AFB	TEXAS	C-17 ADAL NDI FACILITY - DBOF	4,900
KELLY AFB	TEXAS	C-17 ALTDEPOT AVIONICS FACILITY - DBOF	731
LANGLEY AFB	VIRGINIA	BASE ENGINEERING COMPLEX, PHASE II	5,300
DIEGO GARCIA	DIEGO GARCIA	SATELLITE TRACKING STORAGE FACILITY	560
RAF MILDENHALL	UNITED KINGDOM	NAVAL AIR FACILITY	4,800
**AIR FORCE			105,003
SPECIAL OPERATIONS COMMAND			
EGLIN AUX FIELD 9	FLORIDA	ALTER AVIONICS SHOP-H	4,500
EGLIN AUX FIELD 9	FLORIDA	MH60G HELO HANGER (H)	5,700
EGLIN AUX FIELD 9	FLORIDA	MUNITIONS MAINT FAC-H	2,550
EGLIN AUX FIELD 9	FLORIDA	WEAPONS MX FAC ADD(H)	580
OLMSTEAD FIELD, HARRISBURG IAP	PENNSYLVANIA	AVION/ECM POD FAC(O)	1,300
**SPECIAL OPERATIONS COMMAND			14,630
NATIONAL SECURITY AGENCY			
FORT MEADE	MARYLAND	OPS 1 ROADWAY STRUCTURAL ENHANCEMENT	5,910
**NATIONAL SECURITY AGENCY			5,910
ARMY NATIONAL GUARD			
BIRMINGHAM	ALABAMA	AASF ADDITION	4,907
CULLMAN	ALABAMA	CSMS ADDITION	5,070
MOBILE	ALABAMA	ORGANIZATIONAL MAINT SHOP	502
MONTGOMERY	ALABAMA	OMS ADD/ALT	389
MARANA	ARIZONA	OMSS	553
BURBANK	CALIFORNIA	OMS ADDITION/ALTERATION	905
FORT IRWIN	CALIFORNIA	MAINTENANCE SHELTERS	1,265
BRADLEY FIELD (WINDSOR)	CONNECTICUT	AVN, AASF ADDITION/ALTERATION	6,000
CAMP DODGE	IOWA	CONSOLIDATED PAINT FACILITY	1,500
FORT KNOX	KENTUCKY	MATES PHASE I	10,000
AYER	MASSACHUSETTS	CSMS REHABILITATION	3,002
CAMP RIPLEY	MINNESOTA	ORGANIZATIONAL MAINT SHOPS	2,625
TUPELO	MISSISSIPPI	AVN, AASF ADDITION/ALTERATION	3,210
WHITE SANDS MISSILE BASE	NEW MEXICO	MATES	3,570
WHITE SANDS MISSILE BASE	NEW MEXICO	OMS	2,940
FAYETTEVILLE	NORTH CAROLINA	ORGANIZATIONAL MAINT SHOP	473
BISMARCK	NORTH DAKOTA	AVIATION C-12 HANGAR	1,300
CAMP WITHYCOMBE	OREGON	CSMS	7,569
PENDELTON	OREGON	AVN LAASF (LIMITED)	3,515
JOHNSTOWN	PENNSYLVANIA	AVN, JOINT AASF	5,004
COLUMBIA	SOUTH CAROLINA	CSMS	8,616
SUMMERVILLE	SOUTH CAROLINA	ORGAN MAINT SHOP #13	834
SIOUX FALLS	SOUTH DAKOTA	OMS ADDITION/ALTERATION	1,700
CORPUS CHRISTI	TEXAS	OMS	991
LUBBOCK	TEXAS	OMS (AFRC)	1,726
CAMP JOHNSON	VERMONT	ORGANIZATIONAL MAINT SHOP	1,002
CAMP DOUGLAS (CAMP WILLIAMS)	WISCONSIN	CSMS	11,900
**ARMY NATIONAL GUARD			91,068

FY 1994 MILITARY CONSTRUCTION TOTAL OBLIGATIONAL AUTHORITY AS ENACTED

ACTIVE GUARD AND RESERVE FORCES
BY TYPE OF FACILITY
($ THOUSANDS)

DATA AS OF FEB 1995

INSTALLATION	LOCATION	PROJECT	TOTAL
MAINTENANCE & PRODUCTION FACILITIES			
AIR NATIONAL GUARD			
BIRMINGHAM MAP	ALABAMA	AIRCRAFT MAINTENANCE HANGAR	5,500
DANNELLY FIELD	ALABAMA	VEHICLE MAINTENANCE COMPLEX	1,750
EIELSON AFB	ALASKA	FUEL SYSTEM MAINTENANCE HANGAR	8,900
BUCKLEY ANGB	COLORADO	F-16 WEAPONS RELEASE SHOP	1,300
BRADLEY FIELD	CONNECTICUT	ADD TO AND ALTER BASE CIVIL ENGINEER FAC	510
GREATER PEORIA AIRPORT	ILLINOIS	ADD TO AND ALTER F-16 ACRFT AVIONICS SHOP	840
SIOUX CITY MAP	IOWA	BASE CIVIL ENGINEER MAINTENANCE COMPLEX	2,650
SIOUX CITY MAP	IOWA	MUNITIONS MAINTENANCE & STORAGE COMPLEX	2,850
STANDIFORD FIELD	KENTUCKY	RELOCATION FACILITIES PHASE IV	5,000
ANDREWS AFB	MARYLAND	ADD TO AND ALTER AVIONICS AND ECM POD FAC	1,100
LINCOLN MAP	NEBRASKA	ALTER MAINTENANCE HANGAR	7,300
KIRTLAND AFB	NEW MEXICO	ALTER OPERATIONAL TRAINING FACILITY	390
FT INDIANTOWN ANG COMMUNICATIONS SITE	PENNSYLVANIA	CIVIL ENGINEERING MAINTENANCE SHOPS	850
QUONSET STATE AIRPORT	RHODE ISLAND	BASE ENGINEER MAINTENANCE FACILITY	2,750
CAMP PENDLETON ANGB	VIRGINIA	BASE ENGINEER MAINTENANCE AND STORAGE FAC	1,150
PUERTO RICO IAP	PUERTO RICO	ADD TO AND ALTER F-16 AVIONICS SHOP	320
**AIR NATIONAL GUARD			43,160
NAVY RESERVE			
NAF WASHINGTON	MARYLAND	EQUIPMENT OPS FACILITY	2,500
**NAVY RESERVE			2,500
AIR FORCE RESERVE			
PETERSON AFB	COLORADO	ORGANIZATIONAL MAINTENANCE SUPPORT FAC	1,200
BARKSDALE AFB	LOUISIANA	WELDING AND MACHINE SHOP	600
KELLY AFB	TEXAS	RED HORSE STRUCTURAL/UTILITY FACILITY	2,300
**AIR FORCE RESERVE			4,100
** MAINTENANCE & PRODUCTION FACILITIES			480,371
R&D FACILITIES			
ARMY			
ABERDEEN PROVING GROUND	MARYLAND	TARGET ASSEMBLY AND STORAGE FACILITY	1,800
ABERDEEN PROVING GROUND	MARYLAND	UPGRADE RANGE COMPLEX	4,450
FORT MONMOUTH	NEW JERSEY	SATELLITE CONTROL SYSTEM	7,500
PICATINNY ARSENAL	NEW JERSEY	EXPLOSIVE DEVELOPMENT FACILITY	6,100
PICATINNY ARSENAL	NEW JERSEY	WARHEAD DEVELOPMENT FACILITY	4,400
WHITE SANDS MISSILE RANGE	NEW MEXICO	TARGET TRACK	2,900
DUGWAY PROVING GROUND	UTAH	LIFE SCIENCES TEST FACILITY	16,500
**ARMY			43,650
NAVY			
WASHINGTON NAVAL RESEARCH LABORATORY	DISTRICT OF COLUMBIA	NAVAL CENTER FOR SPACE TECHNOLOGY	1,980
WASHINGTON NAVAL RESEARCH LABORATORY	DISTRICT OF COLUMBIA	SPECIAL PROJECTS BUILDING	400
PATUXENT RIVER NAVAL AIR STATION	MARYLAND	ADVANCE SYSTEM INTEGRATION FAC - PHASE II	10,000
NORFOLK CDR OPERATIONAL TEST & EVAL FORCE	VIRGINIA	OPERATIONS TEST & EVALUATION MGMT CTR	8,100
WALLOPS IS NAVAL SURFACE WEAPONS CTR DET	VIRGINIA	SHIP SELF-DEFENSE ENGINEERING FACILITY	10,170
**NAVY			30,650
AIR FORCE			
VANDENBERG AFB	CALIFORNIA	HARDWARE STORAGE FACILITY	3,500
PETERSON AFB	COLORADO	TEST AND EVALUATION SUPPORT FACILITY	2,430
EGLIN AFB	FLORIDA	RENOVATE CLIMATIC TEST CHAMBER PHASE II	37,000

FY 1994 MILITARY CONSTRUCTION TOTAL OBLIGATIONAL AUTHORITY AS ENACTED

ACTIVE GUARD AND RESERVE FORCES
BY TYPE OF FACILITY
($ THOUSANDS)

DATA AS OF FEB 1995

INSTALLATION	LOCATION	PROJECT	TOTAL
R&D FACILITIES			
AIR FORCE			
SCOTT AFB	ILLINOIS	INTEROPERABILITY TEST AND TRAINING FAC	5,000
KIRTLAND AFB	NEW MEXICO	AEROSPACE ENGINEERING FACILITY	3,167
KIRTLAND AFB	NEW MEXICO	COMPOSITE MATERIALS LABORATORY	5,750
KIRTLAND AFB	NEW MEXICO	SPACE STRUCTURES LABORATORY	6,200
WRIGHT-PATTERSON AFB	OHIO	ADAL ACQUISTION MANAGEMENT CMPLX, PH II	12,850
WRIGHT-PATTERSON AFB	OHIO	ADD TO AVIONICS RESEARCH LAB, PHASE II	5,650
WRIGHT-PATTERSON AFB	OHIO	ADD/ALTER ACQUISITION MANAGEMENT CMPLX P2	14,400
DIEGO GARCIA	DIEGO GARCIA	GPS INSTRUMENTATION FACILITY	1,700
**AIR FORCE			97,647
DOD DEPENDENT SCHOOLS			
FORT POLK	LOUISIANA	FORT POLK ELEM SCHOOL	4,950
**DOD DEPENDENT SCHOOLS			4,950
DEFENSE MEDICAL SUPPORT ACTIVITY			
FOREST GLEN (WRAIR)	MARYLAND	#ARMY INSTITUTE OF RESEARCH PHASE II	15,000
**DEFENSE MEDICAL SUPPORT ACTIVITY			15,000
AUTHORIZED IN PRIOR YEAR			(15,000)
** R&D FACILITIES			191,897
AUTHORIZED IN PRIOR YEAR			(15,000)
SUPPLY FACILITIES			
ARMY			
FT STEWART/HUNTER AAF	GEORGIA	EXPAND AMMUNITION STORAGE AREA	3,600
FORT CAMPBELL	KENTUCKY	MOBILIZATION WAREHOUSE	850
HAWTHORNE AAP	NEVADA	CONTAINER HOLDING PADS	7,000
FORT HOOD	TEXAS	COLD/DRY STORAGE FACILITY	13,400
FORT HOOD	TEXAS	DEPLOYMENT EQUIPMENT STORAGE FACILITY	1,500
**ARMY			26,350
NAVY			
FALLBROOK NAVAL WEAPONS STATION ANNEX	CALIFORNIA	HARM MISSILE MAGAZINES - DBOF	4,630
SAN DIEGO FLEET & INDUSTRIAL SUPPLY CENTER	CALIFORNIA	FIRE PROTECTION SYSTEMS - DBOF	2,270
SAN DIEGO MARINE CORPS RECRUIT DEPOT	CALIFORNIA	WAREHOUSE	1,130
FLEET AND INDUSTRIAL SUPPLY CENTER	GUAM	INTERGRATED STORAGE HNDLG FACILITY - DBOF	21,200
**NAVY			29,230
AIR FORCE			
ELMENDORF AFB	ALASKA	MUNITIONS EQUIPMENT FACILITY	1,860
NAVAJO ARMY DEPOT	ARIZONA	ALTER MINUTEMAN II STORAGE FACILITIES	4,969
TYNDALL AFB	FLORIDA	BASE SUPPLY & EQUIPMENT WAREHOUSE	3,200
TYNDALL AFB	FLORIDA	BASE SUPPLY LOGISTICS CENTER	2,400
SCOTT AFB	ILLINOIS	MUNITIONS STORAGE FAC/LAND ACQUIST - DBOF	2,249
WHITEMAN AFB	MISSOURI	B-2 ADD TO AND ALTER MUNITIONS STORAGE FAC	3,338
WRIGHT-PATTERSON AFB	OHIO	SEAL FUEL CONTAINMENT DIKES	1,500
WRIGHT-PATTERSON AFB	OHIO	UNDERGROUND FUEL STORAGE TANKS	3,200
VANCE AFB	OKLAHOMA	T-1 SPECIALIZED UPT MAINTENANCE SUPPORT	2,700
**AIR FORCE			25,416
SPECIAL OPERATIONS COMMAND			
EGLIN AUX FIELD 9	FLORIDA	ADD TO SUPPLY/WRSK	1,502
**SPECIAL OPERATIONS COMMAND			1,502

AUTHORIZED IN PRIOR YEAR

FY 1994 MILITARY CONSTRUCTION TOTAL OBLIGATIONAL AUTHORITY AS ENACTED

ACTIVE GUARD AND RESERVE FORCES
BY TYPE OF FACILITY
($ THOUSANDS)

DATA AS OF FEB 1995

INSTALLATION	LOCATION	PROJECT	TOTAL
SUPPLY FACILITIES			
DEFENSE LOGISTICS AGENCY			
DEF REUTILIZATION & MKTG OFC FAIRBANKS	ALASKA	COVERED STORAGE	6,500
DEFENSE REUTIL AND MARKTNG OFC MARCH AFB	CALIFORNIA	DRMO RELOCATION	630
DEFENSE GENERAL SUPPLY CENTER	VIRGINIA	ALTER HAZARDOUS MATERIAL WAREHOUSE	2,900
DEFENSE GENERAL SUPPLY CENTER	VIRGINIA	HAZARDOUS MATERIAL PROCESSING FACILITY	4,600
DEFENSE GENERAL SUPPLY CENTER	VIRGINIA	SHEDS FOR OIL STORAGE	9,500
DIEGO GARCIA	DIEGO GARCIA	FUEL TANKAGE	9,558
**DEFENSE LOGISTICS AGENCY			33,688
ARMY NATIONAL GUARD			
FORT FUNSTON (SAN FRANCISCO)	CALIFORNIA	MVSB MOTOR VEHICLE STORAGE BLDG	739
SMYRNA	TENNESSEE	DLOG/CLASS IX WAREHOUSE	710
BARRIGADA	GUAM	USPFO/WAREHOUSE	1,573
**ARMY NATIONAL GUARD			3,022
AIR NATIONAL GUARD			
OTIS ANGB	MASSACHUSETTS	COMMUNICTIONS/ELECTRONICS FACILITY	3,000
WORCESTER ANGS	MASSACHUSETTS	BASE SUPPLY WAREHOUSE	390
WILL ROGERS WORLD AIRPORT	OKLAHOMA	MOBILITY EQUIPMENT STORAGE WAREHOUSE	950
KELLY AFB	TEXAS	BASE SUPPLY WAREHOUSE	4,300
ANDERSON AFB	GUAM	BASE SUPPLIES AND EQUIPMENT WAREHOUSE	400
**AIR NATIONAL GUARD			9,040
NAVY RESERVE			
NAVAL AIR STATION NEW ORLEANS	LOUISIANA	ORDNANCE COMPLEX	1,900
**NAVY RESERVE			1,900
AIR FORCE RESERVE			
GREATER PITTSBURGH IAP	PENNSYLVANIA	JET FUEL STORAGE COMPLEX	7,400
**AIR FORCE RESERVE			7,400
** SUPPLY FACILITIES			137,548
HOSPITAL AND MEDICAL FACILITIES			
SPECIAL OPERATIONS COMMAND			
FORT BRAGG	NORTH CAROLINA	MEDICAL TRNG FAC	18,250
**SPECIAL OPERATIONS COMMAND			18,250
DEFENSE MEDICAL SUPPORT ACTIVITY			
ELMENDORF AIR FORCE BASE	ALASKA	#HOSPITAL REPLACEMENT PHASE II	37,000
YUMA MARINE CORPS AIR STATION	ARIZONA	MEDICAL/DENTAL CLINIC ADD/ALT	6,000
EDWARDS AIR FORCE BASE	CALIFORNIA	LIFE SAFETY UPGRADE	1,700
OFFUTT AIR FORCE BASE	NEBRASKA	LIFE SAFETY UPGRADE	1,100
CANNON AIR FORCE BASE	NEW MEXICO	CMF ADD/ALT LIFE SAFETY/SEISMIC UPGRADE	13,600
FORT BRAGG	NORTH CAROLINA	#HOSPITAL REPLACEMENT PHASE II	35,000
GRAND FORKS AIR FORCE BASE	NORTH DAKOTA	LIFE SAFETY UPGRADE	860
NEWPORT NAVAL EDUCATION TRAINING CENTER	RHODE ISLAND	COMPREHENSIVE HEALTH CARE CLINIC PHASE II	4,000
ELLSWORTH AIR FORCE BASE	SOUTH DAKOTA	LIFE SAFETY UPGRADE	1,400
MILLINGTON NAVAL AIR STATION	TENNESSEE	HOSP LIFE SAFETY/SEISMIC UPGRADE PHASE II	5,000
FORT SAM HOUSTON	TEXAS	#HOSPITAL REPLACEMENT PHASE VII	50,000
FORT EUSTIS	VIRGINIA	LIFE SAFETY UPGRADE	3,650
PORTSMOUTH NAVAL HOSPITAL	VIRGINIA	#HOSPITAL REPLACEMENT V	20,000
FAIRCHILD AIR FORCE BASE	WASHINGTON	UTILITY/LIFE SAFETY UPGRADE	8,250
**DEFENSE MEDICAL SUPPORT ACTIVITY			187,560
AUTHORIZED IN PRIOR YEAR			(142,000)
** HOSPITAL AND MEDICAL FACILITIES			205,810
AUTHORIZED IN PRIOR YEAR			(142,000)

AUTHORIZED IN PRIOR YEAR

FY 1994 MILITARY CONSTRUCTION TOTAL OBLIGATIONAL AUTHORITY AS ENACTED

ACTIVE GUARD AND RESERVE FORCES
BY TYPE OF FACILITY
($ THOUSANDS)

DATA AS OF FEB 1995

INSTALLATION	LOCATION	PROJECT	TOTAL
ADMINSTRATIVE FACILITIES			
ARMY			
FORT RUCKER	ALABAMA	PERSONNEL SERVICES FACILITY	14,400
FORT HUACHUCA	ARIZONA	GENERAL PURPOSE ADMINISTRATIVE FACILITY	4,050
FORT HOOD	TEXAS	TEST AND EVALUATION SUPPORT FACILITY	5,200
**ARMY			23,650
NAVY			
WASHINGTON COMMANDANT NAVAL DISTRICT	DISTRICT OF COLUMBIA	FIRE PROTECTION SYSTEM	1,630
VARIOUS LOCATIONS	WORLDWIDE VARIOUS	HOST NATION INFRASTRUCTURE SUPPORT	2,960
**NAVY			4,590
AIR FORCE			
MCCLELLAN AFB	CALIFORNIA	INTERGRATED MEDIA CENTER	1,600
ROBINS AFB	GEORGIA	ADAL LOGISTICAL SYSTEMS OPERATIONS CENTER	3,000
ANDREWS AFB	MARYLAND	UPGRADE COMPOSITE ADMIN FACILITY - DBOF	9,940
CANNON AFB	NEW MEXICO	BASE ENGINEERING COMPLEX	6,150
SEYMOUR JOHNSON AFB	NORTH CAROLINA	MUNITIONS MAINTENANCE SUPPORT FACILITY	480
TINKER AFB	OKLAHOMA	ENGINEERING AND CONTRACT SUPPORT FACILITY	5,900
BROOKS AFB	TEXAS	AIR FORCE CTR FOR ENVIRONMENTAL EXCELLENCE	8,400
KELLY AFB	TEXAS	ALT WEAPON SYS SUPPORT CTR, PH II - DBOF	7,800
LACKLAND AFB	TEXAS	ALTER BASE SUPPORT FACILITY	5,400
LACKLAND AFB	TEXAS	BASE CONTRACTING CENTER	2,450
LACKLAND AFB	TEXAS	MISSION SUPPORT CENTER	7,543
**AIR FORCE			58,663
DEFENSE LOGISTICS AGENCY			
FT. BELVOIR	VIRGINIA	ADMINISTRATIVE BUILDING	5,200
**DEFENSE LOGISTICS AGENCY			5,200
ARMY NATIONAL GUARD			
GOWEN FIELD	IDAHO	USPFO ADMIN OFC/WHSE ADD	1,391
**ARMY NATIONAL GUARD			1,391
NAVY RESERVE			
NAVAL SUPPORT ACTIVITY NEW ORLEANS	LOUISIANA	HDQT 4TH MARDIV MCRC IMPROVEMENTS LA	460
NAVAL SUPPORT ACTIVITY NEW ORLEANS	LOUISIANA	RENOVATE MARRESFOR HQ NSA NEW ORLEANS	1,560
**NAVY RESERVE			2,020
** ADMINSTRATIVE FACILITIES			95,514
TROOP HOUSING FACILITIES			
ARMY			
FORT RUCKER	ALABAMA	WHOLE BARRACKS RENEWAL	20,000
FT IRWIN	CALIFORNIA	WHOLE BARRACKS RENEWAL	5,900
FORT BENNING	GEORGIA	BARRACKS MODERNIZATION	18,500
FORT BENNING	GEORGIA	WHOLE BARRACKS RENEWAL	17,500
FORT RILEY	KANSAS	BARRACKS & ADMIN RENOVATION	9,900
FORT CAMPBELL	KENTUCKY	DINING FACILITIES MODERNIZATION	3,500
FORT CAMPBELL	KENTUCKY	WHOLE BARRACKS RENEWAL	32,000
FORT KNOX	KENTUCKY	WHOLE BARRACKS RENEWAL	25,000
U S MILITARY ACADEMY	NEW YORK	WHOLE BARRACKS RENEWAL	13,800
FORT BRAGG	NORTH CAROLINA	WHOLE BRIGADE BARRACKS COMPLEX	71,600
FORT SILL	OKLAHOMA	WHOLE BARRACKS RENEWAL	15,700

FY 1994 MILITARY CONSTRUCTION TOTAL OBLIGATIONAL AUTHORITY AS ENACTED

ACTIVE GUARD AND RESERVE FORCES
BY TYPE OF FACILITY
($ THOUSANDS)

DATA AS OF FEB 1995

INSTALLATION	LOCATION	PROJECT	TOTAL
TROOP HOUSING FACILITIES			
ARMY			
FORT HOOD	TEXAS	WHOLE BARRACKS RENEWAL	18,000
FORT LEE	VIRGINIA	WHOLE BARRACKS RENEWAL	20,000
FORT MYER	VIRGINIA	WHOLE BARRACKS RENEWAL	6,800
KWAJALEIN	KWAJALEIN	UNACCOMPANIED PERSONNEL HOUSING	10,000
**ARMY			288,200
NAVY			
NEW LONDON NAVAL SUBMARINE BASE	CONNECTICUT	BACHELOR ENLISTED QUARTERS MODERNIZATION	14,800
JACKSONVILLE NAVAL AIR STATION	FLORIDA	BACHELOR ENLISTED QUARTERS	13,800
HONOLULU COMP&TELCOMM AREA MASTER STA EPAC	HAWAII	BACH ENLLISTED QUARTERS MODERNIZATION	4,390
HONOLULU COMP&TELCOMM AREA MASTER STA EPAC	HAWAII	BACHELOR ENLISTED QUARTERS MODERNIZATION	4,730
PEARL HARBOR NAVAL SUBMARINE BASE	HAWAII	BACHELOR ENLISTED QUARTERS COMPLEX	25,500
PEARL HARBOR NAVAL SUBMARINE BASE	HAWAII	ENLISTED MESS HALL MODERNIZATION	2,640
CAMP LEJEUNE NAVAL HOSPITAL	NORTH CAROLINA	BACHELOR ENLISTED QUARTERS	2,370
NEWPORT NAVAL EDUCATION & TRAINING CENTER	RHODE ISLAND	BACHELOR ENLISTED QUARTERS	7,500
BEAUFORT MARINE CORPS AIR STATION	SOUTH CAROLINA	BACHELOR ENLISTED QUARTERS (PHASE II)	8,390
CORPUS CHRISTI NAVAL AIR STATION	TEXAS	BACHELOR ENLISTED QUARTERS IMPROVEMENTS	1,670
NORFOLK NAVAL AIR STATION	VIRGINIA	BACHELOR ENLISTED QUARTERS	12,270
PORTSMOUTH NORFOLK NAVAL SHIPYARD	VIRGINIA	BACHELOR ENLISTED QUARTERS	13,420
BANGOR NAVAL SUBMARINE BASE	WASHINGTON	MESS HALL ADDITION	1,720
ANDERSON AIR FORCE BASE NAVAL AIR FACILITY	GUAM	BACHELOR ENLISTED QUARTERS RENOVATION	3,560
ANDERSON AIR FORCE BASE NAVAL AIR FACILITY	GUAM	BACHELOR OFFICER QUARTERS MODERNIZATION	3,750
NAPLES NAVAL SUPPORT ACTIVITY	ITALY	QUALITY OF LIFE (INCREMENT I)	11,740
**NAVY			132,250
AIR FORCE			
ELMENDORF AFB	ALASKA	DINING FACILITY	6,800
LUKE AFB	ARIZONA	DINING FACILITY	4,700
TRAVIS AFB	CALIFORNIA	ADD/ALTER DORMITORIES, PH IV	5,100
DOVER AFB	DELAWARE	ADD TO AND ALTER DINNING FACILITY - DBOF	2,500
DOVER AFB	DELAWARE	DORMITORY - DBOF	4,180
EGLIN AFB AUXILIARY FIELD 9	FLORIDA	ADD TO AND ALTER DORMITORIES	4,479
ROBINS AFB	GEORGIA	ADD TO ALTER DORMITORIES - DBOF	4,300
HICKAM AFB	HAWAII	DORMITORY	9,500
KEESLER AFB	MISSISSIPPI	UPGRADE STUDENT DORMITORY	4,021
CANNON AFB	NEW MEXICO	ADD TO ALTER DORMITORY	3,100
HOLLOMAN AFB	NEW MEXICO	ADD TO AND ALTER DORMITORIES	6,400
KIRTLAND AFB	NEW MEXICO	ALTER DORMITORY	5,100
POPE AFB	NORTH CAROLINA	ADD TO AND ALTER DORMITORIES	4,300
POPE AFB	NORTH CAROLINA	DINING FACILITY	4,300
SEYMOUR JOHNSON AFB	NORTH CAROLINA	ADD TO AND ALTER DORMITORIES	4,900
DYESS AFB	TEXAS	ADD TO ALTER DORMITORIES	5,200
KELLY AFB	TEXAS	ADD TO & ALTER DORMITORIES - DBOF	2,000
LACKLAND AFB	TEXAS	7-LEVEL TRAINING DORMITORY	8,900
SHEPPARD AFB	TEXAS	7-LEVEL TRAINING DORMITORY	14,200
MCCHORD AFB	WASHINGTON	ADD TO & ALTER DORMITORIES - DBOF	6,500
INCIRLIK AB	TURKEY	ADD TO AND ALTER DORMITORIES	2,400
**AIR FORCE			112,880
SPECIAL OPERATIONS COMMAND			
FORT BRAGG	NORTH CAROLINA	3SFG/4POG BARRACKS	20,000
**SPECIAL OPERATIONS COMMAND			20,000
AIR NATIONAL GUARD			
HICKAM AFB	HAWAII	CONSOLIDATED SUPPORT FACILITY	9,700

FY 1994 MILITARY CONSTRUCTION TOTAL OBLIGATIONAL AUTHORITY AS ENACTED

ACTIVE GUARD AND RESERVE FORCES
BY TYPE OF FACILITY
($ THOUSANDS)

DATA AS OF FEB 1995

INSTALLATION	LOCATION	PROJECT	TOTAL
TROOP HOUSING FACILITIES			
AIR NATIONAL GUARD			
HULMAN FIELD	INDIANA	DINING HALL AND MEDICAL TRAINING FACILITY	3,800
DES MOINES MAP	IOWA	ADD TO AND ALTER DINING & MEDICAL TRNG FAC	1,800
JEFFERSON BARRACKS ANG SITE	MISSOURI	UPGRADE DINING HALL	720
GREAT FALLS IAP	MONTANA	MEDICAL TRAINING AND DINING HALL	2,900
WILL ROGERS WORLD AIRPORT	OKLAHOMA	COMPOSITE SUPPORT FACILITY	3,900
**AIR NATIONAL GUARD			22,820
** TROOP HOUSING FACILITIES			576,150
COMMUNITY FACILITIES			
ARMY			
FORT GILLEM	GEORGIA	PHYSICAL FITNESS CENTER	2,600
SCHOFIELD BARRACKS	HAWAII	MULTI-PURPOSE FAMILY SERVICE CENTER	16,000
ABERDEEN PROVING GROUND	MARYLAND	CHILD DEVELOPMENT CENTER	1,450
WHITE SANDS MISSILE RANGE	NEW MEXICO	CHILD DEVELOPMENT CENTER	3,300
FORT BRAGG	NORTH CAROLINA	MAIN LIBRARY AND REFERENCE CENTER	5,500
FORT SAM HOUSTON	TEXAS	FIRE STATION	1,300
FORT SAM HOUSTON	TEXAS	MULTI-PURPOSE FAMILY SERVICE CENTER	4,351
FORT BELVOIR	VIRGINIA	ELEMENTARY SCHOOL	8,000
**ARMY			42,501
NAVY			
SAN DIEGO NAVAL HOSPITAL	CALIFORNIA	CHILD DEVELOPMENT CENTER	2,700
WASHINGTON COMMANDANT NAVAL DISTRICT	DISTRICT OF COLUMBIA	CHILD DEVELOPMENT CENTER	1,480
ALBANY MARINE CORPS LOGISTICS BASE	GEORGIA	CHILD DEVELOPMENT CENTER	940
BARBERS POINT NAVAL AIR STATION	HAWAII	CHILD DEVELOPMENT CENTER	2,700
BETHESDA NATIONAL NAVAL MEDICAL CENTER	MARYLAND	CHILD DEVELOPMENT CENTER	3,090
GULFPORT NAVAL CONSTRUCTION BATTALION CTR	MISSISSIPPI	CHILD DEVELOPMENT CENTER	2,400
GULFPORT NAVAL CONSTRUCTION BATTALION CTR	MISSISSIPPI	FAMILY SERVICE CENTER	2,000
QUANTICO MARINE CORPS COMBAT DEV COMMAND	VIRGINIA	CHILD DEVELOPMENT CENTER	3,850
NAVAL HOSPITAL	GUAM	CHILD DEVELOPMENT CENTER	2,460
NAVAL STATION	GUAM	CHILD DEVELOPMENT CENTER ADDITION	2,020
SIGONELLA NAVAL AIR STATION	ITALY	CHILD DEVELOPMENT CENTER	3,460
ROTA NAVAL STATION	SPAIN	CHILD DEVELOPMENT CENTER	2,670
**NAVY			29,770
AIR FORCE			
GUNTER AFB	ALABAMA	CHILD DEVELOPMENT CENTER	2,700
EIELSON AFB	ALASKA	CHILD DEVELOPMENT CENTER	5,400
ELMENDORF AFB	ALASKA	CHILD DEVELOPMENT CENTER	5,070
LITTLE ROCK AFB	ARKANSAS	ADD & ALTER CHILD DEVELOPMENT CTR - DBOF	2,250
BEALE AFB	CALIFORNIA	EDUCATION CENTER LIBRARY	3,100
EDWARDS AFB	CALIFORNIA	CHILD DEVELOPMENT CENTER	5,900
BOLLING AIR FORCE BASE	DISTRICT OF COLUMBIA	ADD TO CHILD DEVELOPMENT CENTER	2,000
TYNDALL AFB	FLORIDA	SECURITY POLICE OPERATIONS	2,400
NELLIS AFB	NEVADA	ADD TO ALTER PHYSICAL FITNESS CTR	4,350
SHAW AFB	SOUTH CAROLINA	CHILD DEVELOPMENT CENTER	2,650
SHEPPARD AFB	TEXAS	ADD TO AND ALTER CHILD DEVELOPMENT CENTER	780
MCCHORD AFB	WASHINGTON	CHILD DEVELOPMENT CTR COMPLEX - DBOF	4,400
RAMSTEIN AB	GERMANY	CHILD DEVELOPMENT CENTER	3,100
**AIR FORCE			44,100
DEFENSE LOGISTICS AGENCY			
DEFENSE CONSTRUCTION SUPPLY CENTER	OHIO	CHILD DEVELOPMENT CENTER	3,100
**DEFENSE LOGISTICS AGENCY			3,100

FY 1994 MILITARY CONSTRUCTION TOTAL OBLIGATIONAL AUTHORITY AS ENACTED

ACTIVE GUARD AND RESERVE FORCES
BY TYPE OF FACILITY
($ THOUSANDS)

DATA AS OF FEB 1995

INSTALLATION	LOCATION	PROJECT	TOTAL
COMMUNITY FACILITIES			
DOD DEPENDENT SCHOOLS			
FORT MCCLELLAN	ALABAMA	FT MCCLELLAN ELEM SCHOOL ADDN	2,798
ROBINS AFB	GEORGIA	LINWOOD ELEM SCHOOL ADDN'	1,580
ROBINS AFB	GEORGIA	ROBINS ELEM SCHOOL ADDN	1,580
FORT CAMPBELL	KENTUCKY	FT CAMPBELL ELEM SCHOOL	8,982
FORT CAMPBELL	KENTUCKY	FT CAMPBELL LINCOLN ELEM SCHOOL ADDN	1,900
FORT CAMPBELL	KENTUCKY	FT CAMPBELL MAHAFFEY MIDDLE SCHOOL ADDN	2,300
FORT KNOX	KENTUCKY	FT KNOX KINSOLVER VAN/VOORHIS ELEM SCHOOL	1,600
FORT KNOX	KENTUCKY	FT KNOX SIX GYMNASIUM ADDN	6,107
FORT BRAGG	NORTH CAROLINA	FT BRAGG ELEM SCHOOL	8,838
CAMP LEJEUNE MARINE CORPS BASE	NORTH CAROLINA	CAMP LEJEUNE AUDITORIUM/BAND ROOM	1,465
CAMP LEJEUNE MARINE CORPS BASE	NORTH CAROLINA	CAMP LEJEUNE MULTI ROOM/STONE ELEM SCHOOL	328
QUANTICO MARINE CORPS COMBAT DEV COMMAND	VIRGINIA	QUANTICO HIGH ADDN	422
**DOD DEPENDENT SCHOOLS			37,900
AIR NATIONAL GUARD			
BOISE AIRPORT	IDAHO	FIRE STATION AND AGE FACILITY	1,750
LINCOLN MAP	NEBRASKA	FIRE STATION	1,850
ATLANTIC CITY	NEW JERSEY	FIRE STATION	1,350
HANCOCK FIELD	NEW YORK	FIRE STATION	1,350
TULSA IAP	OKLAHOMA	ADD TO AND ALTER FIRE STATION	460
PORTLAND IAP	OREGON	ADD TO AND ALTER FIRE STATION	500
BURLINGTON IAP	VERMONT	FIRE STATION	1,500
**AIR NATIONAL GUARD			8,760
** COMMUNITY FACILITIES			166,131
UTILITY FACILITIES			
ARMY			
FORT RUCKER	ALABAMA	ROAD IMPROVEMENT	1,300
FT J M WAINWRIGHT	ALASKA	WASTE OIL BURNING POWER PLANT	740
FT STEWART/HUNTER AAF	GEORGIA	HARDSTAND	9,400
FT STEWART/HUNTER AAF	GEORGIA	RAILROAD TRACK IMPROVEMENT	3,100
HAWTHORNE AAP	NEVADA	REHABILITATE RAIL LINE	4,700
FORT BRAGG	NORTH CAROLINA	SEWAGE TREATMENT PLANT UPGRADE	540
TOBYHANNA ARMY DEPOT	PENNSYLVANIA	WATER POLLUTION ABATEMENT	750
FORT LEWIS	WASHINGTON	INCINERATOR BUILDING COMPLETION	14,200
KWAJALEIN	KWAJALEIN	SEWAGE TREATMENT FACILITY	11,200
**ARMY			45,930
NAVY			
CAMP PENDLETON MARINE CORPS AIR STATION	CALIFORNIA	DRAINAGE SYSTEM REPLACEMENT	3,000
CAMP PENDLETON MARINE CORPS BASE	CALIFORNIA	DRAINAGE SYSTEM	1,000
CAMP PENDLETON MARINE CORPS BASE	CALIFORNIA	WATER DISTRIBUTION LINE	750
CAMP PENDLETON MARINE CORPS BASE	CALIFORNIA	WATER DISTRIBUTION SYSTEM IMPROVEMENTS	1,380
CAMP PENDLETON MARINE CORPS BASE	CALIFORNIA	WATER WELLS RELOCATION	1,800
NEW LONDON NAVAL SUBMARINE BASE	CONNECTICUT	ELECTRICAL DISTRIBUTION IMPROVEMENTS	8,190
NEW LONDON NAVAL SUBMARINE BASE	CONNECTICUT	STEAM TURBINE GENERATOR	6,600
PHILADELPHIA NAVAL SHIPYARD	PENNSYLVANIA	POWER PLANT MODERNIZATION	11,500
PHILADELPHIA NAVY AVIATION SUPPLY OFFICE	PENNSYLVANIA	ELECTRICAL DISTRIB SYSTEM UPGRADE - DBOF	1,900
NEWPORT NAVAL EDUCATION & TRAINING CENTER	RHODE ISLAND	ELECTRICAL DISTR SYS UPGRADE (INCR II)	3,800
CHARLESTON NAVAL WEAPONS STATION	SOUTH CAROLINA	FIRE PROTECTION PIPELINE - DBOF	580
MEMPHIS NAVAL AIR STATION	TENNESSEE	FIRE ALARM SYSTEM IMPROVEMENTS	1,100
MEMPHIS NAVAL AIR STATION	TENNESSEE	POTABLE WATER SYSTEM IMPROVEMENTS	350
EVERETT NAVAL STATION	WASHINGTON	STEAM PLANT	11,800
NAVY PUBLIC WORKS CENTER	GUAM	SEWERAGE TREATMENT PLANT - DBOF	7,230
**NAVY			60,980

FY 1994 MILITARY CONSTRUCTION TOTAL OBLIGATIONAL AUTHORITY AS ENACTED

ACTIVE GUARD AND RESERVE FORCES
BY TYPE OF FACILITY
($ THOUSANDS)

DATA AS OF FEB 1995

INSTALLATION	LOCATION	PROJECT	TOTAL
UTILITY FACILITIES			
AIR FORCE			
GUNTER AFB	ALABAMA	EMERGENCY POWER GENERATOR PLANT	1,200
MAXWELL AFB	ALABAMA	UPGRADE UTILITY SYSTEMS, PHASE 1	5,050
CAPE ROMANZOV AFS	ALASKA	REPLACE TRAMWAY SYSTEM	3,350
EIELSON AFB	ALASKA	UPGRADE WASTEWATER TREATMENT SYSTEM	1,750
EIELSON AFB	ALASKA	UPGRADE WATER TREATMENT PLANT	3,750
LUKE AFB	ARIZONA	FLOOD CONTROL	6,000
MCCLELLAN AFB	CALIFORNIA	FIRE PROTECTION ACFT FACILITIES - DBOF	1,900
VANDENBERG AFB	CALIFORNIA	SLFI-UPGRADE FIRE PROTECTION SYSTEM	1,600
VANDENBERG AFB	CALIFORNIA	UPGRADE ELECTRICAL SYSTEM	11,520
CHEYENNE MT COMPLEX AFB	COLORADO	UPGRADE ELECTRICAL SERVICE	4,450
CAPE CANAVERAL AFS	FLORIDA	SLFI-BACKUP POWER	800
CAPE CANAVERAL AFS	FLORIDA	SLFI-BACKUP POWER	2,500
CAPE CANAVERAL AFS	FLORIDA	SLFI-UPGRADE WATER SUPPLY MAINS	1,200
CAPE CANAVERAL AFS	FLORIDA	UPGRADE FIRE SYSTEM	2,100
EGLIN AFB AUXILIARY FIELD 9	FLORIDA	UPGRADE SANITARY SEWAGE SYSTEMS	1,750
ROBINS AFB	GEORGIA	J-STARS ADD TO AND ALTER UTILITIES	3,500
KAENA POINT	HAWAII	POWER PLANT	7,350
BARKSDALE AFB	LOUISIANA	APRON LIGHTING	1,300
BARKSDALE AFB	LOUISIANA	WEAPONS STORAGE AREA SECURITY	960
KEESLER AFB	MISSISSIPPI	UPGRADE SANITARY SEWER SYSTEM	2,920
WHITEMAN AFB	MISSOURI	B-2 DEFENSE ACCESS ROADS	7,150
WHITEMAN AFB	MISSOURI	B-2 UPGRADE BASE ROADS	5,900
OFFUTT AFB	NEBRASKA	ADD TO EMERGENCY BACK-UP POWER	2,300
KIRTLAND AFB	NEW MEXICO	UPGRADE ELECTRICAL DISTRIBUTION SYSTEM	6,844
KIRTLAND AFB	NEW MEXICO	UPGRADE UTILITY SYSTEM	8,000
WRIGHT-PATTERSON AFB	OHIO	FIRE PROTECTION SYSTEM	1,400
WRIGHT-PATTERSON AFB	OHIO	RENOVATE ELECTRIC SUBSTATIONS	4,450
DYESS AFB	TEXAS	WEAPONS STORAGE AREA SECURITY	890
KELLY AFB	TEXAS	UPGRADE STORM DRAINAGE SYSTEM, PHASE I	2,900
RANDOLPH AFB	TEXAS	UPGRADE ELECTRICAL DISTRIBUTION SYSTEM	2,500
HILL AFB	UTAH	UPGRADE INDUSTRIAL WASTEWATER COLL SYSTEM	6,200
HILL AFB	UTAH	UPGRADE WATER DISTRIBUTION SYSTEM	2,400
LANGLEY AFB	VIRGINIA	RESTORE KING STREET BRIDGE	4,100
F E WARREN AFB	WYOMING	WEAPONS STORAGE AREA SECURITY	640
ANTIGUA ISLAND	ANTIGUA	SLFI-UPGRADE BACKUP GENERATOR	1,000
**AIR FORCE			121,624
DEFENSE LEVEL ACTIVITIES			
OSD MILCON	CONUS CLASSIFIED	CLASSIFIED LOCATION	5,600
OVERSEAS CLASSIFIED	OVERSEAS CLASSIFIED	CLASSIFIED PROJECT	10,755
UNSPECIFIED WORLDWIDE LOCATIONS	WORLDWIDE UNSPECIFIED	CONTINGENCY CONSTRUCTION	12,400
**DEFENSE LEVEL ACTIVITIES			28,755
DEFENSE LOGISTICS AGENCY			
DEF REUTILIZATION & MKTG OFC HILL AFB	UTAH	FIRE PROTECTION & OPEN STORAGE	1,700
**DEFENSE LOGISTICS AGENCY			1,700
DEFENSE MEDICAL SUPPORT ACTIVITY			
FORT DETRICK	MARYLAND	BIOLOGICAL INCINERATOR	4,300
**DEFENSE MEDICAL SUPPORT ACTIVITY			4,300
AIR NATIONAL GUARD			
BIRMINGHAM MAP	ALABAMA	ROAD RELOCATION	6,200
SAVANNAH COMBAT READINESS TRAINING SITE	GEORGIA	FIRE DETECTION AND SUPPRESSION SYSTEMS	1,650
GULFPORT	MISSISSIPPI	UPGRADE ELECTRICAL DISTRIBUTION SYSTEM	850

FY 1994 MILITARY CONSTRUCTION TOTAL OBLIGATIONAL AUTHORITY AS ENACTED

ACTIVE GUARD AND RESERVE FORCES
BY TYPE OF FACILITY
($ THOUSANDS)

DATA AS OF FEB 1995

INSTALLATION	LOCATION	PROJECT	TOTAL
UTILITY FACILITIES			
AIR NATIONAL GUARD			
FRANCIS S. GABRESKI AIRPORT	NEW YORK	WASTE WATER TREATMENT PLANT	2,700
TOLEDO EXPRESS AIRPORT	OHIO	FIRE SUPPRESSION SYSTEM	1,100
PUERTO RICO IAP	PUERTO RICO	UPGRADE F-16 ACFT PKNG RAMP SECURITY SYS	2,000
**AIR NATIONAL GUARD			14,500
AIR FORCE RESERVE			
BILLY MITCHELL FIELD	WISCONSIN	ADD FIRE PROTECTION TO AIRCRAFT HANGARS	1,500
**AIR FORCE RESERVE			1,500
** UTILITY FACILITIES			279,289
REAL ESTATE			
ARMY			
FORT BRAGG	NORTH CAROLINA	OVERHILLS LAND TRACT	15,000
FORT BRAGG	NORTH CAROLINA	SIMMONS AIRFIELD LAND PURCHASE	1,450
PL 103-211 RESCISSION TO PL 103-110 FUNDS	WORLDWIDE VARIOUS	ARMY	-22,319
**ARMY			-5,869
NAVY			
KINGS BAY NAVAL SUBMARINE BASE	GEORGIA	UTILITIES AND SITE IMPROVEMENTS	7,190
FALLON NAVAL AIR STATION	NEVADA	LAND ACQUISITION	1,600
LAND ACQUISITION	WORLDWIDE VARIOUS	LAND ACQUISITION	1,340
PL 103-211 RESCISSION TO PL 103-110 FUNDS	WORLDWIDE VARIOUS	NAVY	-13,969
**NAVY			-3,839
AIR FORCE			
MCCONNELL AFB	KANSAS	LAND RESTRICTIVE EASEMENT ACQUISITION	1,000
ALTUS AFB	OKLAHOMA	DROP ZONE LAND ACQUISITION	780
PL 103-211 RESCISSION TO PL 103-110 FUNDS	WORLDWIDE VARIOUS	AIR FORCE	-24,787
**AIR FORCE			-23,007
DEFENSE LEVEL ACTIVITIES			
PL 103-211 RESCISSION TO PL 103-110 FUNDS	WORLDWIDE VARIOUS	DEFENSE LEVEL ACTIVITIES	-13,663
**DEFENSE LEVEL ACTIVITIES			-13,663
ARMY NATIONAL GUARD			
PL 103-211 RESCISSION TO PL 103-110 FUNDS	WORLDWIDE VARIOUS	ARMY NATIONAL GUARD	-7,568
**ARMY NATIONAL GUARD			-7,568
AIR NATIONAL GUARD			
ROBINS AFB	GEORGIA	SUPPORT AND HYDRANT SYSTEM	5,750
CONGRESSIONAL REDUCTIONS	WORLDWIDE VARIOUS	GENERAL REDUCTION	-5,740
PL 103-211 RESCISSION TO PL 103-110 FUNDS	WORLDWIDE VARIOUS	AIR NATIONAL GUARD	-6,187
**AIR NATIONAL GUARD			-6,177
ARMY RESERVE			
PL 103-211 RESCISSION TO PL 103-110 FUNDS	WORLDWIDE VARIOUS	ARMY RESERVE	-2,551
**ARMY RESERVE			-2,551
NAVY RESERVE			
PL 103-211 RESCISSION TO PL 103-110 FUNDS	WORLDWIDE VARIOUS	NAVY RESERVE	-626
**NAVY RESERVE			-626

FY 1994 MILITARY CONSTRUCTION TOTAL OBLIGATIONAL AUTHORITY AS ENACTED

ACTIVE GUARD AND RESERVE FORCES
BY TYPE OF FACILITY
($ THOUSANDS)

DATA AS OF FEB 1995

INSTALLATION	LOCATION	PROJECT	TOTAL
REAL ESTATE			
AIR FORCE RESERVE			
PL 103-211 RESCISSION TO PL 103-110 FUNDS	WORLDWIDE VARIOUS	AIR FORCE RESERVE	-1,862
**AIR FORCE RESERVE			-1,862
** REAL ESTATE			-65,162
AIR POLLUTION ABATEMENT			
AIR FORCE			
DOVER AFB	DELAWARE	INSTALL EMISSION CONTROL DEVICES	860
ROBINS AFB	GEORGIA	AIRCRAFT SUPPORT EQUIPMENT PAINT FACILITY	970
**AIR FORCE			1,830
AIR NATIONAL GUARD			
LINCOLN MAP	NEBRASKA	REPLACE HEATING PLANTS	1,500
**AIR NATIONAL GUARD			1,500
** AIR POLLUTION ABATEMENT			3,330
WATER POLLUTION ABATEMENT			
NAVY			
BARSTOW MARINE CORPS LOGISTICS BASE	CALIFORNIA	INDUSTRIAL WASTE TREATMENT PLANT	8,690
CAMP PENDLETON MARINE CORPS BASE	CALIFORNIA	SEWERAGE FACILITY	7,930
LEMOORE NAVAL AIR STATION	CALIFORNIA	FIRE FIGHTING TRAINING FACILITY	1,930
NEW LONDON NAVAL SUBMARINE BASE	CONNECTICUT	HAZARDOUS WASTE TRANSFER FACILITY	1,450
NEW LONDON NAVAL SUBMARINE BASE	CONNECTICUT	INDUSTRIAL WASTE TREATMENT FACILITY	5,700
MAYPORT NAVAL STATION	FLORIDA	AIR EMISSIONS CONTROL	3,260
PEARL HARBOR NAVY PUBLIC WORKS CENTER	HAWAII	INDUSTRIAL WASTE TREATMENT PLANT - DBOF	18,560
PEARL HARBOR NAVY PUBLIC WORKS CENTER	HAWAII	WASTEWATER COLLECTION SYS IMPRVMNT - DBOF	8,980
KITTERY PORTSMOUTH NAVAL SHIPYARD	MAINE	HAZARDOUS WASTE STORAGE FACILITY - DBOF	4,780
INDIAN HEAD NAVAL SURFACE WARFARE CTR DIV	MARYLAND	HAZARDOUS WASTE TREATMENT FACILITY	3,400
PATUXENT RIVER NAVAL AIR STATION	MARYLAND	HAZARDOUS AND FLAMMABLE MATERIAL STOREHSE	3,400
PATUXENT RIVER NAVAL AIR STATION	MARYLAND	SEWAGE TREATMENT PLANT UPGRADE	1,000
EARLE NAVAL WEAPONS STATION	NEW JERSEY	HAZARDOUS WASTE STORAGE FACILITY - DBOF	870
CAMP LEJEUNE MARINE CORPS BASE	NORTH CAROLINA	LANDFILL	7,690
CAMP LEJEUNE MARINE CORPS BASE	NORTH CAROLINA	WASTEWATER TREATMENT PLANT (PHASE I)	28,300
BEAUFORT MARINE CORPS AIR STATION	SOUTH CAROLINA	JET FUEL DELIVERY SYSTEM IMPROVEMENT	2,510
CRANEY ISLAND FLT & INDUS SUPPLY CTR ANNEX	VIRGINIA	WASTEWATER TREATMENT PLANT MODS - DBOF	11,740
NORFOLK NAVY PUBLIC WORKS CENTER	VIRGINIA	TRASH RECYCLE FACILITY ADDITION - DBOF	5,330
BANGOR NAVAL SUBMARINE BASE	WASHINGTON	OILY WASTE TREATMENT FACILITY	1,380
KEYPORT NAVAL UNDERSEA WARFARE CENTER DIV	WASHINGTON	HAZARDOUS WASTE STORAGE FACILITY - DBOF	8,980
CONUS VARIOUS	CONUS VARIOUS	WASTEWATER COLLECTION & TREATMENT SYSTEM	3,260
**NAVY			139,140
AIR FORCE			
GUNTER AFB	ALABAMA	HAZARDOUS WASTE ACCUMULATION FACILITY	310
GUNTER AFB	ALABAMA	SPILL CONTAINMENT CONTROLS	470
MAXWELL AFB	ALABAMA	SPILL CONTAINMENT CONTROLS	655
MAXWELL AFB	ALABAMA	UNDERGROUND FUEL STORAGE TANKS	1,517
EIELSON AFB	ALASKA	FIRE TRAINING FACILITY	2,400
ELMENDORF AFB	ALASKA	ADD TO SANITARY SEWER SYSTEM	5,100
ELMENDORF AFB	ALASKA	HAZARDOUS WASTE STORAGE FACILITY	3,900
DAVIS-MONTHAN AFB	ARIZONA	UNDERGROUND FUEL STORAGE TANKS	650
LUKE AFB	ARIZONA	FIRE TRAINING FACILITY	800
LUKE AFB	ARIZONA	UNDERGROUND FUEL STORAGE TANKS	1,250

FY 1994 MILITARY CONSTRUCTION TOTAL OBLIGATIONAL AUTHORITY AS ENACTED

ACTIVE GUARD AND RESERVE FORCES
BY TYPE OF FACILITY
($ THOUSANDS)

DATA AS OF FEB 1995

INSTALLATION	LOCATION	PROJECT	TOTAL
WATER POLLUTION ABATEMENT			
AIR FORCE			
EDWARDS AFB	CALIFORNIA	UNDERGROUND FUEL STORAGE,TANKS	5,400
TRAVIS AFB	CALIFORNIA	UNDERGROUND FUEL STORAGE TANKS - DBOF T	2,840
VANDENBERG AFB	CALIFORNIA	UNDERGROUND FUEL STORAGE TANKS	1,700
US AIR FORCE ACADEMY	COLORADO	ADAL WASTEWATER TREATMENT PLANT	7,100
US AIR FORCE ACADEMY	COLORADO	UNDERGROUND FUEL STORAGE TANKS	780
CAPE CANAVERAL AFS	FLORIDA	SEWAGE TREATMENT PLANT	11,900
CAPE CANAVERAL AFS	FLORIDA	UNDERGROUND FUEL STORAGE TANKS	400
EGLIN AFB	FLORIDA	REPLACE POL PIPELINE	3,300
EGLIN AFB AUXILIARY FIELD 9	FLORIDA	UPGRADE STORM SEWAGE SYSTEM	1,544
PATRICK AFB	FLORIDA	UNDERGROUND FUEL STORAGE TANKS	1,600
ROBINS AFB	GEORGIA	UPGD INDSTRL WASTEWATER TRTMNT & DSPSL PLT	10,700
HICKAM AFB	HAWAII	UNDERGROUND FUEL STORAGE TANKS	2,100
BARKSDALE AFB	LOUISIANA	UPGRADE BULK STORAGE BASINS	1,600
ANDREWS AFB	MARYLAND	UPGRADE SANITARY SEWER SYSTEMS	2,477
KEESLER AFB	MISSISSIPPI	FIRE TRAINING FACILITY	690
KEESLER AFB	MISSISSIPPI	UNDERGROUND FUEL STORAGE TANKS	600
MALMSTROM AFB	MONTANA	UNDGD FUEL STORAGE TANKS MINUTEMAN II FACS	1,500
NELLIS AFB	NEVADA	UPGRADE POL TANKS	1,650
CANNON AFB	NEW MEXICO	FIRE TRAINING FACILITY	1,000
CANNON AFB	NEW MEXICO	UNDERGROUND FUEL STORAGE TANKS	1,100
HOLLOMAN AFB	NEW MEXICO	SEWER EFFLUENT SYSTEM	1,800
HOLLOMAN AFB	NEW MEXICO	UNDERGROUND FUEL STORAGE TANKS	1,000
GRAND FORKS AFB	NORTH DAKOTA	UNDERGROUND FUEL STORAGE TANKS	2,600
MINOT AFB	NORTH DAKOTA	UNDERGROUND FUEL STORAGE TANKS	2,000
TINKER AFB	OKLAHOMA	INDTL WASTEWATER REGIONAL CONNECT - DBOF	5,400
TINKER AFB	OKLAHOMA	SEAL FUEL CONTAINMENT DIKES	620
TINKER AFB	OKLAHOMA	UNDERGROUND FUEL STORAGE TANKS	4,700
CHARLESTON AFB	SOUTH CAROLINA	FIRE TRAINING FACILITY - DBOF	1,100
SHAW AFB	SOUTH CAROLINA	UNDERGROUND FUEL STORAGE TANKS	520
ARNOLD ENGINEERING DEV CENTER	TENNESSEE	UPGRADE SEWAGE TREATMENT PLANT	1,500
KELLY AFB	TEXAS	UPGRADE SANITARY SEWER MAINS	3,000
REESE AFB	TEXAS	UNDERGROUND FUEL STORAGE TANKS	900
SHEPPARD AFB	TEXAS	FIRE TRAINING FACILITY	850
HILL AFB	UTAH	FIRE TRAINING FACILITY - DBOF	880
HILL AFB	UTAH	UPGDE INDTRL WASTEWATER TRTMNT PLT - DBOF	5,100
LANGLEY AFB	VIRGINIA	UNDERGROUND FUEL STORAGE TANKS	500
F E WARREN AFB	WYOMING	UNDERGROUND FUEL STORAGE TANKS	2,200
ASCENSION ISLAND	ASCENSION ISLAND	SLFI-WASTEWATER TREATMENT PLANT	3,400
THULE AB	GREENLAND	WASTEWATER TREATMENT PLANT	5,492
**AIR FORCE			120,595
AIR NATIONAL GUARD			
BIRMINGHAM MAP	ALABAMA	FUEL CELL DOCK	4,400
KULIS ANGB	ALASKA	REPLACE UNDERGROUND STORAGE TAMKS	1,100
TUCSON IAP	ARIZONA	REPLACE UNDERGROUND STORAGE TANKS	440
FT SMITH MAP	ARKANSAS	AIRCRAFT CORROSION CONTROL FACILITY	1,100
FRESNO ANGB	CALIFORNIA	REPLACE UNDERGROUND FUEL STORAGE TANKS	490
ONTARIO INTERNATIONAL AIRPORT (ANG)	CALIFORNIA	REPLACE UNDERGROUND FUEL STORAGE TANKS	310
GREATER WILMINGTON AIRPORT	DELAWARE	REPLACE UNDERGROUND FUEL STORAGE TANKS	890
JACKSONVILLE IAP	FLORIDA	REPLACE UNDERGROUND FUEL STORAGE TANKS	1,150
DOBBINS AFB	GEORGIA	PETROLEUM OPERATIONS COMPLEX	600
DOBBINS AFB	GEORGIA	REPLACE UNDERGROUND FUEL STORAGE TANKS	1,150
LEWIS B. WILSON AIRPORT (ANG)	GEORGIA	REPLACE UNDERGROUND FUEL STORAGE TANKS	340
MCCOLLUM ANG STATION	GEORGIA	REPLACE UNDERGROUND FUEL STORAGE TANKS	315
SAVANNAH ANG COMMUNICATIONS STATION	GEORGIA	REPLACE UNDERGROUND FUEL STORAGE TANKS	330
SAVANNAH COMBAT READINESS TRAINING SITE	GEORGIA	REPLACE UNDERGROUND FUEL STORAGE TANKS	315
SAVANNAH MAP	GEORGIA	REFUELING VEHICLE PARKING AND OPS COMPLEX	990
HICKAM AFB	HAWAII	FUEL SYSTEM MAINT AND CORROSION CONTROL FA	5,300

FY 1994 MILITARY CONSTRUCTION TOTAL OBLIGATIONAL AUTHORITY AS ENACTED

ACTIVE GUARD AND RESERVE FORCES
BY TYPE OF FACILITY
($ THOUSANDS)

DATA AS OF FEB 1995

INSTALLATION	LOCATION	PROJECT	TOTAL
WATER POLLUTION ABATEMENT			
AIR NATIONAL GUARD			
CAPITAL MAP	ILLINOIS	ALTER STORM DRAINAGE DISPOSAL	500
HULMAN FIELD	INDIANA	REPLACE UNDERGROUND FUEL STORAGE TANKS	950
FT WAYNE MAP	INDIANA	REPLACE UNDERGROUND FUEL STORAGE TANKS	1,350
DES MOINES MAP	IOWA	REPLACE UNDERGROUND FUEL STORAGE TANKS	880
FORBES FIELD	KANSAS	REPLACE UNDERGROUND FUEL STORAGE TANKS	1,400
HAMMOND	LOUISIANA	REPLACE UNDERGROUND STORAGE TANKS	350
NEW ORLEANS NAS	LOUISIANA	REPLACE UNDERGROUND FUEL STORAGE TANKS	350
ANDREWS AFB	MARYLAND	REPLACE UNDERGROUND FUEL STORAGE TANKS	890
GLENN L MARTIN AIRPORT	MARYLAND	REPLACE UNDERGROUND FUEL STORAGE TANKS	1,000
ALPENA COUNTY REGIONAL AIRPORT	MICHIGAN	UPGRADE WATER DISTRIBUTION SYSTEM	1,400
SELFRIDGE ANGB	MICHIGAN	REPLACE UNDERGROUND FUEL STORAGE TANKS	710
WK KELLOGG REGIONAL AIRPORT	MICHIGAN	ADAL FUEL CELL AND CORROSION CONTROL FAC	1,100
DULUTH ANGB	MINNESOTA	REPLACE UNDERGROUND FUEL STORAGE TANKS	1,000
ALLEN C THOMPSON FIELD	MISSISSIPPI	REPLACE UNDERGROUND FUEL STORAGE TANKS	730
GULFPORT	MISSISSIPPI	REPLACE UNDERGROUND FUEL STORAGE TANKS	335
ROSECRANS MEMORIAL AIRPORT	MISSOURI	REPLACE UNDERGROUND FUEL STORAGE TANKS	1,250
GREAT FALLS IAP	MONTANA	REPLACE UNDERGROUND FUEL STORAGE TANKS	400
RENO IAP	NEVADA	REPLACE UNDERGROUND FUEL STORAGE TANKS	460
ATLANTIC CITY	NEW JERSEY	REPLACE UNDERGROUND FUEL STORAGE TANKS	1,900
STEWART AIRPORT	NEW YORK	INDUSTRIAL WASTE HOLDING POND	320
HECTOR FIELD	NORTH DAKOTA	UPGRADE STORM DRAINAGE	400
PORTLAND IAP	OREGON	DRAINAGE IMPROVEMENTS	950
COVENTRY AGS	RHODE ISLAND	REPLACE UNDERGROUND FUEL STORAGE TANKS	840
NORTH SMITHFIELD ANGS	RHODE ISLAND	REPLACE UNDERGROUND FUEL STORAGE TANKS	550
QUONSET STATE AIRPORT	RHODE ISLAND	REPLACE UNDERGROUND FUEL STORAGE TANKS	890
MCENTIRE	SOUTH CAROLINA	REPLACE UNDERGROUND FUEL STORAGE TANKS	1,750
JOE FOSS FIELD	SOUTH DAKOTA	ADAL FUEL SYSTEMS MAINT/CORROSION DOCK	1,700
MCGHEE-TYSON AIRPORT	TENNESSEE	REPLACE UNDERGROUND FUEL STORAGE TANKS	1,100
NASHVILLE MAP	TENNESSEE	REPLACE UNDERGROUND FUEL STORAGE TANKS	1,000
ELLINGTON FIELD	TEXAS	REPLACE UNDERGROUND FUEL STORAGE TANKS	1,600
KELLY AFB	TEXAS	REPLACE UNDERGROUND FUEL STORAGE TANKS	560
SALT LAKE CITY IAP	UTAH	SITE RESTORATION	2,000
RICHARD E BYRD IAP	VIRGINIA	ADAL FUEL SYSTEMS MAINTENANCE DOCK	1,300
RICHARD E BYRD IAP	VIRGINIA	REPLACE UNDERGROUND FUEL STORAGE TANKS	1,100
BELLINGHAM MUNICIPAL AIRPORT ANG	WASHINGTON	REPLACE UNDERGROUND FUEL STORAGE TANKS	420
CAMP MURRAY	WASHINGTON	REPLACE UNDERGROUND FUEL STORAGE TANKS	380
FOUR LAKES COMMUNICATIONS STATION	WASHINGTON	REPLACE UNDERGROUND FUEL STORAGE TANKS	360
PAINE FIELD ANG STATION	WASHINGTON	REPLACE UNDERGROUND FUEL STORAGE TANKS	320
SEATTLE AIR NATIONAL GUARD BASE	WASHINGTON	REPLACE UNDERGROUND FUEL STORAGE TANKS	320
YEAGER AIRPORT	WEST VIRGINIA	REPLACE UNDERGROUND FUEL STORAGE TANKS	370
BILLY MITCHELL FIELD	WISCONSIN	REPLACE UNDERGROUND FUEL STORAGE TANKS	600
TRUAX FIELD	WISCONSIN	FIRE STATION	1,400
VOLK FIELD	WISCONSIN	REPLACE UNDERGROUND FUEL STORAGE TANKS	510
PUERTO RICO IAP	PUERTO RICO	ALTER FUEL SYSTEMS MAINTENANCE FACILITY	750
**AIR NATIONAL GUARD			57,665
** WATER POLLUTION ABATEMENT			317,400
NOISE POLLUTION ABATEMENT			
AIR NATIONAL GUARD			
KIRTLAND AFB	NEW MEXICO	POWER CHECK PAD WITH SOUND SUPPRESSOR	800
**AIR NATIONAL GUARD			800
ENERGY CONSERVATION			
AIR FORCE			
WHITEMAN AFB	MISSOURI	B-2 UTILITY UPGRADE	4,850
**AIR FORCE			4,850

FY 1994 MILITARY CONSTRUCTION TOTAL OBLIGATIONAL AUTHORITY AS ENACTED

ACTIVE GUARD AND RESERVE FORCES
BY TYPE OF FACILITY
($ THOUSANDS)

DATA AS OF FEB 1995

INSTALLATION	LOCATION	PROJECT	TOTAL
ENERGY CONSERVATION			
DEFENSE LEVEL ACTIVITIES			
UNSPECIFIED WORLDWIDE LOCATIONS	WORLDWIDE UNSPECIFIED	ENERGY CONSERVATION IMPROVEMENT PROGRAM	50,000
**DEFENSE LEVEL ACTIVITIES			50,000
** ENERGY CONSERVATION			54,850
UNSPECIFIED MINOR CONSTRUCTION			
ARMY	WORLDWIDE UNSPECIFIED		12,000
NAVY	WORLDWIDE UNSPECIFIED		5,500
AIR FORCE	WORLDWIDE UNSPECIFIED		6,844
ON-SITE INSPECTION AGENCY	WORLDWIDE UNSPECIFIED		812
SPECIAL OPERATIONS COMMAND	WORLDWIDE UNSPECIFIED		4,922
BALLISTIC MISSILE DEFENSE ORAGNIZATION	WORLDWIDE UNSPECIFIED		2,192
DEFENSE LEVEL ACTIVITIES	WORLDWIDE UNSPECIFIED		2,000
JOINT CHIEFS OF STAFF	WORLDWIDE UNSPECIFIED		5,975
DOD DEPENDENT SCHOOLS	WORLDWIDE UNSPECIFIED		4,000
DEFENSE MEDICAL SUPPORT ACTIVITY	WORLDWIDE UNSPECIFIED		3,757
ARMY NATIONAL GUARD	WORLDWIDE UNSPECIFIED		5,000
AIR NATIONAL GUARD	WORLDWIDE UNSPECIFIED		4,000
ARMY RESERVE	WORLDWIDE UNSPECIFIED		2,100
NAVY RESERVE	WORLDWIDE UNSPECIFIED		1,042
AIR FORCE RESERVE	WORLDWIDE UNSPECIFIED		3,904
** UNSPECIFIED MINOR CONSTRUCTION			64,048
PLANNING & DESIGN			
ARMY	WORLDWIDE UNSPECIFIED		25,000
ARMY	WORLDWIDE UNSPECIFIED		84,441
NAVY	WORLDWIDE UNSPECIFIED		64,373
AIR FORCE	WORLDWIDE UNSPECIFIED		63,882
SPECIAL OPERATIONS COMMAND	WORLDWIDE UNSPECIFIED		7,900
BALLISTIC MISSILE DEFENSE ORAGNIZATION	WORLDWIDE UNSPECIFIED		535
DEFENSE LEVEL ACTIVITIES	WORLDWIDE UNSPECIFIED		10,105
DEFENSE MEDICAL SUPPORT ACTIVITY	WORLDWIDE UNSPECIFIED		25,865
ARMY NATIONAL GUARD	WORLDWIDE UNSPECIFIED		10,271
AIR NATIONAL GUARD	WORLDWIDE UNSPECIFIED		10,868
ARMY RESERVE	WORLDWIDE UNSPECIFIED		7,004
NAVY RESERVE	WORLDWIDE UNSPECIFIED		1,359
AIR FORCE RESERVE	WORLDWIDE UNSPECIFIED		3,989
** PLANNING & DESIGN			315,592
BASE REALIGNMENT & CLOSURE ACCT PART I			
DEFENSE LEVEL ACTIVITIES			
BASE REALIGNMENT & CLOSURE ACCT PART I	WORLDWIDE UNSPECIFIED	BASE REALIGNMENT & CLOSURE PART I	77,830
**DEFENSE LEVEL ACTIVITIES			77,830
BASE REALIGNMENT & CLOSURE ACCT PART II			
DEFENSE LEVEL ACTIVITIES			
BASE REALIGNMENT & CLOSURE ACCT PART II	WORLDWIDE UNSPECIFIED	BASE REALIGNMENT & CLOSURE PART II	1,438,942
**DEFENSE LEVEL ACTIVITIES			1,438,942
BASE REALIGNMENT & CLOSURE ACCT PART III			
DEFENSE LEVEL ACTIVITIES			
BASE REALIGNMENT & CLOSURE ACCT PART III	WORLDWIDE UNSPECIFIED	BASE REALIGNMENT & CLOSURE PART III	1,144,000

FY 1994 MILITARY CONSTRUCTION TOTAL OBLIGATIONAL AUTHORITY AS ENACTED

ACTIVE GUARD AND RESERVE FORCES
BY TYPE OF FACILITY
($ THOUSANDS)

DATA AS OF FEB 1995

INSTALLATION	LOCATION	PROJECT	TOTAL
BASE REALIGNMENT & CLOSURE ACCT PART III			
DEFENSE LEVEL ACTIVITIES			
PL 103-211 RESCISSION TO PL 103-110 FUNDS	WORLDWIDE VARIOUS	DEFENSE LEVEL ACTIVITIES	-507,692
**DEFENSE LEVEL ACTIVITIES			636,308
NATO INFRASTRUCTURE			
DEFENSE LEVEL ACTIVITIES			
OSD MILCON	WORLDWIDE UNSPECIFIED	NATO INFRASTRUCTURE	148,417
**DEFENSE LEVEL ACTIVITIES			148,417
TOTALS			
ARMY			1,278,997
NAVY			692,007
AIR FORCE			1,310,708
AUTHORIZED IN PRIOR YEAR			(5,000)
DEFENSE AGENCIES			2,849,842
AUTHORIZED IN PRIOR YEAR			(157,000)
*** TOTAL ***			6,131,554
AUTHORIZED IN PRIOR YEAR			(162,000)

FY 1994 FAMILY HOUSING TOTAL OBLIGATIONAL AUTHORITY AS ENACTED

BY TYPE OF FACILITY
($ THOUSANDS)

DATA AS OF FEB 1995

INSTALLATION	LOCATION	PROJECT	TOTAL
FAMILY HOUSING, ARMY			
FORT IRWIN	CALIFORNIA	NEW CONSTRUCTION (220)	25,000
SCHOFIELD BARRACKS	HAWAII	NEW CONST(124)(18.0M) + REPL(136)(21.0M)	39,000
SCHOFIELD BARRACKS	HAWAII	NEW CONSTRUCTION (88)	13,000
FORT MEADE	MARYLAND	REPLACEMENT CONSTRUCTION (275)	26,000
HAWTHORNE APP	NEVADA	DEMOLISH SUBSTANDARD, ABANDONED HSE (100)	500
U S MILITARY ACADEMY	NEW YORK	REPLACEMENT CONSTRUCTION (100)	15,000
FORT BRAGG	NORTH CAROLINA	REPLACEMENT CONSTRUCTION (224)	18,000
FORT MCCOY	WISCONSIN	REPLACEMENT CONSTRUCTION (16)	2,950
		CONSTRUCTION IMPROVEMENTS	77,630
		PLANNING	11,805
		FURNISHINGS ACCOUNT	55,707
		MANAGEMENT ACCOUNT	88,063
		MISCELLANEOUS ACCOUNT	1,640
		SERVICES ACCOUNT	64,247
		UTILITIES ACCOUNT	306,648
		LEASING	265,639
		MAINTENANCE OF REAL PROPERTY	287,228
		MORTGAGE INSURANCE PREMIUMS	17
TOTAL FAMILY HOUSING, ARMY			1,298,074
FAMILY HOUSING, NAVY			
PUBLIC WORKS CENTER SAN DIEGO	CALIFORNIA	NEW CONSTRUCTION (318 HOMES)	36,571
PUBLIC WORKS CENTER WASHINGTON DC	DISTRICT OF COLUMBIA	NEW CONSTRUCTION (188 HOMES)	21,556
PUBLIC WORKS CENTER PENSACOLA	FLORIDA	NEW CONSTRUCTION (SELF HELP/WAREHOUSE)	300
NAVAL SUBMARINE SUPPORT BASE KINGS BAY	GEORGIA	NEW CONSTRUCTION (CMM CNTR/SELF HLP/HHSE)	790
NAS BRUNSWICK	MAINE	NEW CONSTRUCTION (MOBILE HOME SPACES)	490
NAVAL AIR STATION OCEANA	VIRGINIA	NEW CONSTRUCTION (COMMUNITY CENTER)	860
NAVAL COMPLEX NORFOLK	VIRGINIA	NEW CONSTRUCTION (392 HOMES)	50,674
NAVAL AIR STATION WHIDBEY ISLAND	WASHINGTON	NEW CONSTRUCTION (106 HOMES)	10,000
NAVAL SUBMARINE BASE BANGOR	WASHINGTON	NEW CONSTRUCTION (290 HOMES)	27,438
NAVAL ACTIVITIES LONDON	UNITED KINGDOM	NEW CONSTRUCTION (81 HOMES)	15,470
		CONSTRUCTION IMPROVEMENTS	183,135
		PLANNING	22,924
		FURNISHINGS ACCOUNT	36,904
		MANAGEMENT ACCOUNT	79,569
		MISCELLANEOUS ACCOUNT	1,133
		SERVICES ACCOUNT	45,539
		UTILITIES ACCOUNT	192,760
		LEASING	113,308
		MAINTENANCE OF REAL PROPERTY	302,754
		MORTGAGE INSURANCE PREMIUMS	88
TOTAL FAMILY HOUSING, NAVY			1,142,263
FAMILY HOUSING, AIR FORCE			
MAXWELL AFB	ALABAMA	FAMILY HOUSING (55 UNITS)	4,080
LITTLE ROCK AFB	ARKANSAS	HOUSING OFFICE AND MAINTENANCE FACILITY	980
VANDENBERG AFB	CALIFORNIA	FAMILY HOUSING (166 UNITS)	21,907
PATRICK AFB	FLORIDA	FAMILY HOUSING (155 UNITS)	15,388
TYNDALL AFB	FLORIDA	INFRASTRUCTURE	5,732
ROBINS AFB	GEORGIA	FAMILY HOUSING (118 UNITS)	7,424
SCOTT AFB	ILLINOIS	CARDINAL CREEK PHASE II	10,000
BARKSDALE AFB	LOUISIANA	FAMILY HOUSING (117 UNITS)	8,578
HANSCOM AFB	MASSACHUSETTS	FAMILY HOUSING (46 UNITS)	5,135
MALMSTROM AFB	MONTANA	HOUSING OFFICE	581
DYESS AFB	TEXAS	HOUSING MAINTENANCE FACILITY	281
LACKLAND AFB	TEXAS	FAMILY HOUSING (111 UNITS)	8,770

FY 1994 FAMILY HOUSING TOTAL OBLIGATIONAL AUTHORITY AS ENACTED

BY TYPE OF FACILITY
($ THOUSANDS)

DATA AS OF FEB 1995

INSTALLATION	LOCATION	PROJECT	TOTAL
FAMILY HOUSING, AIR FORCE			
LANGLEY AFB	VIRGINIA	HOUSING OFFICE	452
FAIRCHILD AFB	WASHINGTON	FAMILY HOUSING (1 UNIT)	184
F E WARREN AFB	WYOMING	FAMILY HOUSING (107 UNITS)	10,572
		CONSTRUCTION IMPROVEMENTS	75,070
		PLANNING	11,901
		FURNISHINGS ACCOUNT	43,543
		MANAGEMENT ACCOUNT	44,282
		MISCELLANEOUS ACCOUNT	4,639
		SERVICES ACCOUNT	28,183
		UTILITIES ACCOUNT	148,036
		LEASING	118,266
		MAINTENANCE OF REAL PROPERTY	403,942
		MORTGAGE INSURANCE PREMIUMS	21
TOTAL FAMILY HOUSING, AIR FORCE			977,947
FAMILY HOUSING, NATIONAL SECURITY AGENCY			
		CONSTRUCTION IMPROVEMENTS	50
		FURNISHINGS ACCOUNT	16
		MANAGEMENT ACCOUNT	62
		MISCELLANEOUS ACCOUNT	26
		SERVICES ACCOUNT	366
		UTILITIES ACCOUNT	372
		LEASING	10,105
		MAINTENANCE OF REAL PROPERTY	228
TOTAL FAMILY HOUSING, NSA			11,225
FAMILY HOUSING, DEF INTELLIGENCE AGENCY			
		FURNISHINGS ACCOUNT	1,441
		LEASING	12,368
TOTAL FAMILY HOUSING, DIA			13,809
FAMILY HOUSING, DEFENSE LOGISTICS AGENCY			
		CONSTRUCTION IMPROVEMENTS	109
		FURNISHINGS ACCOUNT	41
		MANAGEMENT ACCOUNT	158
		SERVICES ACCOUNT	50
		UTILITIES ACCOUNT	451
		MAINTENANCE OF REAL PROPERTY	653
TOTAL FAMILY HOUSING, DLA			1,462
GRAND TOTAL FAMILY HOUSING, DEFENSE AGENCIES			26,496
HOMEOWNERS ASSISTANCE			
		PAYMENT TO HOMEOWNERS	9,631
		OTHER OPERATING COSTS	27,319
		ACQUISITION OF REAL PROPERTY	109,426
HOMEOWNERS ASSISTANCE			146,376
GRAND TOTAL FAMILY HOUSING			3,591,156

FY 1995 CONSTRUCTION ANNEX TOTAL OBLIGATIONAL AUTHORITY AS ENACTED

SUMMARY BY FACILITY	TOTAL CONSTRUCTION ANNEX BY TYPE OF FACILITY ($ THOUSANDS) ARMY	NAVY	AIR FORCE	DATA AS OF FEB 1995 DEF. AGS.	TOTAL
OPERATIONAL FACILITIES	72,330	19,270	203,063	31,620	326,283
TRAINING FACILITIES	201,350	55,850	38,850	17,300	313,350
MAINTENANCE & PRODUCTION FACILITIES	90,290	33,970	89,559	8,652	222,471
R&D FACILITIES	6,600	15,590	49,350		71,540
SUPPLY FACILITIES	54,635		21,000		75,635
HOSPITAL AND MEDICAL FACILITIES				286,580	286,580
AUTHORIZED IN PRIOR YEAR				(261,000)	(261,000)
ADMINSTRATIVE FACILITIES	4,600		50,650	5,100	60,350
TROOP HOUSING FACILITIES	249,600	70,470	122,275		442,345
COMMUNITY FACILITIES	10,700	53,130	21,173	8,360	93,363
UTILITY FACILITIES	38,700	26,000	53,930	22,198	140,828
AUTHORIZED IN PRIOR YEAR			(4,000)		(4,000)
REAL ESTATE	-30,000	12,690	-40,465		-57,775
AIR POLLUTION ABATEMENT			4,550		4,550
WATER POLLUTION ABATEMENT		82,750	125,718		208,468
ENERGY CONSERVATION				50,000	50,000
UNSPECIFIED MINOR CONSTRUCTION	19,824	7,158	15,000	22,348	64,330
PLANNING & DESIGN	77,279	45,180	67,709	51,960	242,128
BASE REALIGNMENT & CLOSURE ACCT PART I				87,600	87,600
BASE REALIGNMENT & CLOSURE ACCT PART II				607,489	607,489
BASE REALIGNMENT & CLOSURE ACCT PART III				2,114,069	2,114,069
NATO INFRASTRUCTURE				119,000	119,000
FAMILY HOUSING CONSTRUCTION	170,002	267,465	277,444	350	715,261
(MEMO-NON-ADD)	(9,700)				(9,700)
FAMILY HOUSING DEBT	11	85	26		122
FAMILY HOUSING OPERATIONS	1,013,697	937,514	824,819	29,031	2,805,061
HOMEOWNERS ASSISTANCE	169,184				169,184
*** TOTAL ***	2,148,802	1,627,122	1,924,651	3,461,657	9,162,232
(MEMO-NON-ADD)	(9,700)				(9,700)
AUTHORIZED IN PRIOR YEAR			(4,000)	(261,000)	(265,000)

FY 1995 CONSTRUCTION ANNEX TOTAL OBLIGATIONAL AUTHORITY AS ENACTED

SUMMARY BY FACILITY	----TOTAL MILCON----- BY TYPE OF FACILITY ($ THOUSANDS) ARMY	NAVY	AIR FORCE	DATA AS OF FEB 1995 DEF. AGS.	TOTAL
OPERATIONAL FACILITIES	72,330	19,270	203,063	31,620	326,283
TRAINING FACILITIES	201,350	55,850	38,850	17,300	313,350
MAINTENANCE & PRODUCTION FACILITIES	90,290	33,970	89,559	8,652	222,471
R&D FACILITIES	6,600	15,590	49,350		71,540
SUPPLY FACILITIES	54,635		21,000		75,635
HOSPITAL AND MEDICAL FACILITIES				286,580	286,580
AUTHORIZED IN PRIOR YEAR				(261,000)	(261,000)
ADMINSTRATIVE FACILITIES	4,600		50,650	5,100	60,350
TROOP HOUSING FACILITIES	249,600	70,470	122,275		442,345
COMMUNITY FACILITIES	10,700	53,130	21,173	8,360	93,363
UTILITY FACILITIES	38,700	26,000	53,930	22,198	140,828
AUTHORIZED IN PRIOR YEAR			(4,000)		(4,000)
REAL ESTATE	-30,000	12,690	-40,465		-57,775
AIR POLLUTION ABATEMENT			4,550		4,550
WATER POLLUTION ABATEMENT		82,750	125,718		208,468
ENERGY CONSERVATION				50,000	50,000
UNSPECIFIED MINOR CONSTRUCTION	19,824	7,158	15,000	22,348	64,330
PLANNING & DESIGN	77,279	45,180	67,709	51,960	242,128
BASE REALIGNMENT & CLOSURE ACCT PART I				87,600	87,600
BASE REALIGNMENT & CLOSURE ACCT PART II				607,489	607,489
BASE REALIGNMENT & CLOSURE ACCT PART III				2,114,069	2,114,069
NATO INFRASTRUCTURE				119,000	119,000
*** TOTAL ***	795,908	422,058	822,362	3,432,276	5,472,604
AUTHORIZED IN PRIOR YEAR			(4,000)	(261,000)	(265,000)

FY 1995 CONSTRUCTION ANNEX TOTAL OBLIGATIONAL AUTHORITY AS ENACTED

SUMMARY BY FACILITY	----ACTIVE FORCES---- BY TYPE OF FACILITY ($ THOUSANDS) ARMY	NAVY	AIR FORCE	DATA AS OF FEB 1995 DEF. AGS.	TOTAL
OPERATIONAL FACILITIES	54,950	18,430	77,991	31,620	182,991
TRAINING FACILITIES	28,600	35,900	10,900	17,300	92,700
MAINTENANCE & PRODUCTION FACILITIES	74,250	33,970	41,050	8,652	157,922
R&D FACILITIES	6,600	15,590	49,350		71,540
SUPPLY FACILITIES	34,350		14,950		49,300
HOSPITAL AND MEDICAL FACILITIES				286,580	286,580
AUTHORIZED IN PRIOR YEAR				(261,000)	(261,000)
ADMINSTRATIVE FACILITIES	4,600		50,650	5,100	60,350
TROOP HOUSING FACILITIES	249,600	70,470	106,975		427,045
COMMUNITY FACILITIES	10,700	53,130	11,273	8,360	83,463
UTILITY FACILITIES	38,700	26,000	34,465	22,198	121,363
AUTHORIZED IN PRIOR YEAR			(4,000)		(4,000)
REAL ESTATE	-30,000	12,690	-40,000		-57,310
AIR POLLUTION ABATEMENT			4,550		4,550
WATER POLLUTION ABATEMENT		82,750	98,273		181,023
ENERGY CONSERVATION				50,000	50,000
UNSPECIFIED MINOR CONSTRUCTION	12,000	7,000	7,000	22,348	48,348
PLANNING & DESIGN	66,126	43,380	49,386	51,960	210,852
BASE REALIGNMENT & CLOSURE ACCT PART I				87,600	87,600
BASE REALIGNMENT & CLOSURE ACCT PART II				607,489	607,489
BASE REALIGNMENT & CLOSURE ACCT PART III				2,114,069	2,114,069
NATO INFRASTRUCTURE				119,000	119,000
*** TOTAL ***	550,476	399,310	516,813	3,432,276	4,898,875
AUTHORIZED IN PRIOR YEAR			(4,000)	(261,000)	(265,000)

FY 1995 CONSTRUCTION ANNEX TOTAL OBLIGATIONAL AUTHORITY AS ENACTED

NATIONAL GUARD FORCES
BY TYPE OF FACILITY
($ THOUSANDS)

DATA AS OF FEB 1995

SUMMARY BY FACILITY	ARMY	NAVY	AIR FORCE	DEF. AGS.	TOTAL
OPERATIONAL FACILITIES	17,380		93,864		111,244
TRAINING FACILITIES	123,290		25,400		148,690
MAINTENANCE & PRODUCTION FACILITIES	16,040		45,959		61,999
SUPPLY FACILITIES	20,285		4,900		25,185
TROOP HOUSING FACILITIES			10,100		10,100
COMMUNITY FACILITIES			8,500		8,500
UTILITY FACILITIES			15,065		15,065
REAL ESTATE			-465		-465
WATER POLLUTION ABATEMENT			26,445		26,445
UNSPECIFIED MINOR CONSTRUCTION	5,167		4,000		9,167
PLANNING & DESIGN	5,900		14,823		20,723
*** TOTAL ***	188,062		248,591		436,653

FY 1995 CONSTRUCTION ANNEX TOTAL OBLIGATIONAL AUTHORITY AS ENACTED

SUMMARY BY FACILITY	---RESERVE FORCES---- BY TYPE OF FACILITY ($ THOUSANDS) ARMY	NAVY	AIR FORCE	DATA AS OF FEB 1995	TOTAL
OPERATIONAL FACILITIES		840	31,208		32,048
TRAINING FACILITIES	49,460	19,950	2,550		71,960
MAINTENANCE & PRODUCTION FACILITIES			2,550		2,550
SUPPLY FACILITIES			1,150		1,150
TROOP HOUSING FACILITIES			5,200		5,200
COMMUNITY FACILITIES			1,400		1,400
UTILITY FACILITIES			4,400		4,400
WATER POLLUTION ABATEMENT			1,000		1,000
UNSPECIFIED MINOR CONSTRUCTION	2,657	158	4,000		6,815
PLANNING & DESIGN	5,253	1,800	3,500		10,553
*** TOTAL ***	57,370	22,748	56,958		137,076

FY 1995 CONSTRUCTION ANNEX TOTAL OBLIGATIONAL AUTHORITY AS ENACTED

TOT GUARD AND RESERVE
BY TYPE OF FACILITY
($ THOUSANDS)

DATA AS OF FEB 1995

SUMMARY BY FACILITY	ARMY	NAVY	AIR FORCE		TOTAL
OPERATIONAL FACILITIES	17,380	840	125,072		143,292
TRAINING FACILITIES	172,750	19,950	27,950		220,650
MAINTENANCE & PRODUCTION FACILITIES	16,040		48,509		64,549
SUPPLY FACILITIES	20,285		6,050		26,335
TROOP HOUSING FACILITIES			15,300		15,300
COMMUNITY FACILITIES			9,900		9,900
UTILITY FACILITIES			19,465		19,465
REAL ESTATE			-465		-465
WATER POLLUTION ABATEMENT			27,445		27,445
UNSPECIFIED MINOR CONSTRUCTION	7,824	158	8,000		15,982
PLANNING & DESIGN	11,153	1,800	18,323		31,276
*** TOTAL ***	245,432	22,748	305,549		573,729

FY 1995 CONSTRUCTION ANNEX TOTAL OBLIGATIONAL AUTHORITY AS ENACTED

---FAMILY HOUSING---

SUMMARY BY FACILITY	($ THOUSANDS) ARMY	NAVY	AIR FORCE	DATA AS OF FEB 1995 DEF. AGS.	TOTAL
FAMILY HOUSING CONSTRUCTION	170,002	267,465	277,444	350	715,261
(MEMO-NON-ADD)	(9,700)				(9,700)
FAMILY HOUSING DEBT	11	85	26		122
FAMILY HOUSING OPERATIONS	1,013,697	937,514	824,819	29,031	2,805,061
HOMEOWNERS ASSISTANCE	169,184				169,184
*** TOTAL ***	1,352,894	1,205,064	1,102,289	29,381	3,689,628
(MEMO-NON-ADD)	(9,700)				(9,700)

FY 1995 MILITARY CONSTRUCTION TOTAL OBLIGATIONAL AUTHORITY AS ENACTED

ACTIVE GUARD AND RESERVE FORCES
BY TYPE OF FACILITY
($ THOUSANDS)

DATA AS OF FEB 1995

INSTALLATION	LOCATION	PROJECT	TOTAL
OPERATIONAL FACILITIES			
ARMY			
FT IRWIN	CALIFORNIA	NTC ARMY AIRFIELD (PH 1)	10,000
FORT GORDON	GEORGIA	SECURE COMPARTMENTED INFORMATION FACILITY	2,500
MIL OCEAN TERM BAYONNE	NEW JERSEY	PAVE CARGO STAGING AND HOLDING AREA	4,050
SUNNY POINT ARMY TERM	NORTH CAROLINA	DREDGE TERMINAL ENTRANCE	16,500
CHARLESTON NAVAL WEAPONS STATION	SOUTH CAROLINA	ARMY STRATEGIC MAINTENANCE COMPLEX, PH I	20,000
CLASSIFIED LOCATIONS	CONUS CLASSIFIED	CLASSIFIED PROJECT	1,900
**ARMY			54,950
NAVY			
CAMP PENDLETON MARINE CORPS AIR STATION	CALIFORNIA	AIRFLD COMMUNICATIONS/ELEC INFRASTRUCTURE	6,290
CAMP PENDLETON MARINE CORPS BASE	CALIFORNIA	AMMUNITION HANDLING FACILITY	570
NORTH ISLAND NAVAL AIR STATION	CALIFORNIA	DREDGING	18,830
PENSACOLA NAVAL AIR STATION	FLORIDA	AIR TRAFFIC CONTROL TOWER	2,100
CHERRY POINT MARINE CORPS AIR STATION	NORTH CAROLINA	CYROGENICS FACILITY	2,100
PHILADELPHIA NAVAL SHIPYARD	PENNSYLVANIA	PIER RENOVATION	6,000
INGLESIDE NAVAL STATION	TEXAS	MAGNETIC SILENCING FAC W/LAND ACQUISITION	14,110
KINGSVILLE NAVAL AIR STATION	TEXAS	AIR OPERATIONS BUILDING ADDITION	1,530
CONUS VARIOUS	CONUS VARIOUS	AIRCRAFT FIRE/RESCUE STA & VEH MAINT FAC	2,200
SOUDA BAY CRETE NAVAL SUPPORT ACTIVITY	GREECE	AIRCRAFT PARKING APRON	3,050
SABANA SECA NAVAL SECURITY GROUP ACTIVITY	PUERTO RICO	OPERATIONS BUILDING ADDITION	1,650
CONGRESSIONAL REDUCTIONS	WORLDWIDE VARIOUS	CONGRESSIONAL REDUCTION	-40,000
**NAVY			18,430
AIR FORCE			
ELMENDORF AFB	ALASKA	JOINT MOBILITY RAMP	4,000
DOVER AFB	DELAWARE	MOBLILTY/PASSENGER PROCESSING CTR	5,900
MOODY AFB	GEORGIA	UPGRADE AIRFIELD PAVEMENTS	8,000
MOUNTAIN HOME AFB	IDAHO	REPAIR APRONS	11,000
BARKSDALE AFB	LOUISIANA	ADAL APRONS/HYDRANS FUEL, PH 3	8,200
WHITEMAN AFB	MISSOURI	B-2 ADAL APRON, TAXIWAY, & CONVOY ROADS	4,600
POPE AFB	NORTH CAROLINA	AIRCRAFT PARKING APRON LIGHTING	1,500
POPE AFB	NORTH CAROLINA	COMBAT CONTROL TEAM FACILITY	2,450
WRIGHT-PATTERSON AFB	OHIO	SPECIAL OPERATIONS INTELLIGENCE FACILITY	4,900
TINKER AFB	OKLAHOMA	EXTEND/UPGRADE ALTERNATE RUNWAY	10,800
VANCE AFB	OKLAHOMA	UPGRADE AIRCRAFT PARKING CENTER	5,500
FAIRCHILD AFB	WASHINGTON	KC 135 SQ OPS AMU FACILITY	6,300
MCCHORD AFB	WASHINGTON	CONTROL TOWER	2,700
CLASSIFIED LOCATION	CONUS CLASSIFIED	SPECIAL TACTICAL UNIT DETACHMENT FACILITY	2,141
**AIR FORCE			77,991
SPECIAL OPERATIONS COMMAND			
SAN DEIGO	CALIFORNIA	SOF PBC PIER UPGRADE	3,400
EGLIN AUX FIELD 9	FLORIDA	HC-130 PARK APRON (H)	7,500
FORT BRAGG	NORTH CAROLINA	4 POG CO, POS	8,000
**SPECIAL OPERATIONS COMMAND			18,900
NATIONAL SECURITY AGENCY			
FORT MEADE	MARYLAND	SUPERCOMPUTER FACILITY	12,720
**NATIONAL SECURITY AGENCY			12,720
ARMY NATIONAL GUARD			
BETHEL	ALASKA	AVN OPS FAC	6,380
GROTON	CONNECTICUT	AVN, REPAIR DEPOT ADD/ALT	9,000
PENDELTON	OREGON	AVN SUPPORT FACILITY	2,000
**ARMY NATIONAL GUARD			17,380

FY 1995 MILITARY CONSTRUCTION TOTAL OBLIGATIONAL AUTHORITY AS ENACTED

ACTIVE GUARD AND RESERVE FORCES
BY TYPE OF FACILITY
($ THOUSANDS)

DATA AS OF FEB 1995

INSTALLATION	LOCATION	PROJECT	TOTAL
OPERATIONAL FACILITIES			
AIR NATIONAL GUARD			
BIRMINGHAM MAP	ALABAMA	ACFT PARKING APRON & HYDRANT REFUELING SYS	15,000
BIRMINGHAM MAP	ALABAMA	ADAL SQUADRON OPERATIONS FACILITY	1,100
BIRMINGHAM MAP	ALABAMA	COMMUNICATIONS FACILITY	1,700
FT SMITH MAP	ARKANSAS	REPLACE UNDERGROUND FUEL STORAGE TANKS	440
NO HIGHLANDS ANG STATION	CALIFORNIA	REPLACE UNDERGROUND FUEL STORAGE TANKS	400
ROBINS AFB	GEORGIA	B-1 CONSOLIDATED AIRCRAFT SPT/HYDRANT SYS	9,400
HICKAM AFB	HAWAII	REPLACE UNDERGROUND FUEL STORAGE TANKS	1,000
HULMAN FIELD	INDIANA	COMP SUPPORT FACILITY	3,200
FT WAYNE MAP	INDIANA	AIRCRAFT DEICING APRON	400
FORBES FIELD	KANSAS	UPGRADE RUNWAY	4,800
BANGOR IAP	MAINE	COMPOSITE SQUADRON OPERATIONS	8,800
MINN-ST PAUL IAP	MINNESOTA	SQUADRON OPERATIONS/AEROMEDICAL EVAC	8,000
JEFFERSON BARRACKS ANG SITE	MISSOURI	REPLACE FUEL TANKS/UPGRADE REFUEL BOOTH	500
ST LOUIS-LAMBERT FIELD	MISSOURI	REPLACE UNDERGROUND FUEL STORAGE TANKS	440
LINCOLN MAP	NEBRASKA	PARKING APRON AND HYDRANT REFUELING SYS	14,274
MCGUIRE AFB	NEW JERSEY	CONSOLIDATED AIRCRAFT PARKING APRON	9,600
STANLY COUNTY AIRPORT	NORTH CAROLINA	COMPOSITE DEPLOYMENT FACILITY	5,100
WILLOW GROVE NAS	PENNSYLVANIA	REPLACE UNDERGROUND FUEL STORAGE TANKS	470
JOE FOSS FIELD	SOUTH DAKOTA	POWER CHECK PAD	2,500
SALT LAKE CITY IAP	UTAH	AIRCRAFT WASHRACK AND DEICE FACILITY	400
RICHARD E BYRD IAP	VIRGINIA	JET FUEL STORAGE COMPLEX	4,500
FAIRCHILD AFB	WASHINGTON	ADAL SQUADRON OPERATIONS FACILITY	1,250
PUERTO RICO IAP	PUERTO RICO	REPLACE UNDERGROUND FUEL STORAGE TANKS	590
**AIR NATIONAL GUARD			93,864
NAVY RESERVE			
NAVAL AIR STATION NEW ORLEANS	LOUISIANA	ARMING PAD	840
**NAVY RESERVE			840
AIR FORCE RESERVE			
LUKE AFB	ARIZONA	SQUADRON OPERATIONS FACILITY	1,900
HOMESTEAD AFB	FLORIDA	HYDRANT AND HOT PIT FUELING SYSTEM	2,000
GRISSOM AFB	INDIANA	CANTONMENT AREA ENV COMPLIANCE	2,200
BARKSDALE AFB	LOUISIANA	ADD ALTER FACILITIES FOR CONVERSION	5,000
WESTOVER AFB	MASSACHUSETTS	REPLACE TAXIWAY "G"	5,100
KINSTON REGIONAL AIRPORT	NORTH CAROLINA	HOLDING APRON & RUNWAY IMPROVEMENTS	4,808
TINKER AFB	OKLAHOMA	UPGRADE RAMP HYDRANT FUELING SYSTEM	10,200
**AIR FORCE RESERVE			31,208
** OPERATIONAL FACILITIES			326,283
TRAINING FACILITIES			
ARMY			
FORT BENNING	GEORGIA	UPGRADE CARMOUCHE TANK RANGE	1,900
FORT KNOX	KENTUCKY	MULTIPURPOSE TRAINING RANGE	5,300
FORT KNOX	KENTUCKY	VIRTUAL BRIGADE SIMULATOR BUILDING	3,200
FORT DRUM	NEW YORK	MULTI-PURPOSE RANGE COMPLEX	12,600
FORT BLISS	TEXAS	ARMY SERGEANTS MAYOR ACADEMY	5,600
**ARMY			28,600
NAVY			
TWENTYNINE PALMS MARCORP AIR-GRND COMB CTR	CALIFORNIA	SMALL ARMS RANGE MODERNIZATION	2,900
CAMP LEJEUNE MARINE CORPS BASE	NORTH CAROLINA	MULTI-PURPOSE TRAINING RANGE COMPLEX	10,400
NEWPORT NAVAL WAR COLLEGE	RHODE ISLAND	STRATEGIC MARITIME RESEARCH CENTER	10,000

FY 1995 MILITARY CONSTRUCTION TOTAL OBLIGATIONAL AUTHORITY AS ENACTED

ACTIVE GUARD AND RESERVE FORCES
BY TYPE OF FACILITY
($ THOUSANDS)

DATA AS OF FEB 1995

INSTALLATION	LOCATION	PROJECT	TOTAL
TRAINING FACILITIES			
NAVY			
PARRIS ISLAND MARINE CORPS RECRUIT DEPOT	SOUTH CAROLINA	RECRUIT TRAINING FACILITY	5,800
DAM NECK FLEET COMBAT TRAIN CTR ATLANTIC	VIRGINIA	WEAPONS TRAINING FACILITY	5,400
WHIDBEY ISLAND NAVAL AIR STATION	WASHINGTON	FIRE FIGHTING TRAINING FACILITY	1,400
**NAVY			35,900
AIR FORCE			
KEESLER AFB	MISSISSIPPI	7-LEVEL TRAINING CLASSROOMS	1,800
LACKLAND AFB	TEXAS	7-LEVEL TRAINING CLASSROOMS	1,800
SHEPPARD AFB	TEXAS	7-LEVEL TRAINING CLASSROOMS	3,300
FAIRCHILD AFB	WASHINGTON	ADAL FLIGHT SIMULATOR FACILITY	4,000
**AIR FORCE			10,900
SPECIAL OPERATIONS COMMAND			
EGLIN AUX FIELD 9	FLORIDA	SIMULATOR FAC ADD (H)	4,800
EGLIN AUX FIELD 9	FLORIDA	SOF AQUATIC TRANING	2,900
KIRTLAND AIR FORCE BASE	NEW MEXICO	AIRCREW TRAINING FACILITY	9,600
**SPECIAL OPERATIONS COMMAND			17,300
ARMY NATIONAL GUARD			
SEARCY	ARKANSAS	ARMORY	2,415
CAMP ROBERTS	CALIFORNIA	RANGE, COMBAT PISTOL QUAL CRSE	952
CAMP ROBERTS	CALIFORNIA	RANGE, MODIFIED RECORD FIRE	3,910
DENVER	COLORADO	ARMORY	5,000
ENGLEWOOD	COLORADO	ARMORY	2,725
CAMP BLANDING	FLORIDA	TRNG SITE, WASTEWATER TREAT PLANT	2,083
FORT STEWART (HINESVILLE)	GEORGIA	REG TRNG SITE-MAINT	2,400
POST FALLS	IDAHO	ARMORY ADD/ALT	2,500
CAMP DODGE	IOWA	TNG SITE, BN COMPLEX PHIII	4,678
NICKELL BARRACKS	KANSAS	TNG SITE, BARRACKS PHII	4,260
WEST KY REGION TRAIN CENTER	KENTUCKY	TNG SITE, COMPLEX PHI	6,500
RUSTON	LOUISIANA	ARMORY REHAB	2,745
AUGUSTA	MAINE	ARMORY ADD/REHAB/ANNEX	3,900
BALTIMORE	MARYLAND	ARMORY	4,558
TAUNTON	MASSACHUSETTS	ARMORY	2,900
AUGUSTA	MICHIGAN	RANGE, COMBAT PISTOL QUAL CRSE	400
AUGUSTA	MICHIGAN	RANGE, MOD RECORD FIRE	900
CALUMET	MICHIGAN	ARMORY RENOVATION	120
CRYSTAL SPRINGS	MISSISSIPPI	ARMORY	2,250
WINONA	MISSISSIPPI	ARMORY	1,650
COLUMBIA	MISSOURI	ARMORY	1,415
JEFFERSON CITY	MISSOURI	TNG SITE, ACCESS ROAD	1,396
STEAD	NEVADA	ARMORY	5,520
CAMP SMITH	NEW YORK	TNG SITE, WATER/WASTE SYS REHAB	1,820
KINSTON	NORTH CAROLINA	ARMORY	3,519
RAVENNA	OHIO	TNG SITE SUPPORT FAC/ARMORY	4,500
OKLAHOMA CITY	OKLAHOMA	TNG SITE, BARRACKS/CLASSROOM	4,463
UMATILLA ARMY DEPOT	OREGON	ARMORY	1,713
ARMSTRONG COUNTY (FORD CITY)	PENNSYLVANIA	ARMORY	1,982
FORT INDIANTOWN GAP	PENNSYLVANIA	RANGE, (RETS)	770
FORT INDIANTOWN GAP	PENNSYLVANIA	TNG SITE, BARRACKS	6,200
FORT INDIANTOWN GAP	PENNSYLVANIA	TNG STE, FLT SIM/AERO-MED CPLX	4,584
WESTMORELAND CNTY/MT PLEASANT	PENNSYLVANIA	ARMORY	3,594
CATOOSA	TENNESSEE	ARMORY ADD/REHAB	1,604
JOHNSON CITY	TENNESSEE	AFRC ADD/ALT	6,019
JOHNSON CITY	TENNESSEE	ARMORY	1,742
LINDEN	TENNESSEE	ARMORY	1,097

FY 1995 MILITARY CONSTRUCTION TOTAL OBLIGATIONAL AUTHORITY AS ENACTED

ACTIVE GUARD AND RESERVE FORCES
BY TYPE OF FACILITY
($ THOUSANDS)

DATA AS OF FEB 1995

INSTALLATION	LOCATION	PROJECT	TOTAL
TRAINING FACILITIES			
ARMY NATIONAL GUARD			
ONEIDA	TENNESSEE	ARMORY	1,230
ROGERSVILLE	TENNESSEE	ARMORY	1,820
SPRINGFIELD	TENNESSEE	ARMORY	1,115
WAVERLY	TENNESSEE	ARMORY ADD/ALT PHII	321
FORT WORTH	TEXAS	ARMORY ADD/ALT	3,041
TORRINGTON	WYOMING	ARMORY	5,300
VARIOUS LOCATIONS	WORLDWIDE VARIOUS	ARMORY UNIT STORAGE BUILDING	840
VARIOUS LOCATIONS	WORLDWIDE VARIOUS	INDOOR RANGE MODERNIZATION	839
**ARMY NATIONAL GUARD			123,290
AIR NATIONAL GUARD			
ABSTON ANG STATION	ALABAMA	RELOCATE 232 COMBAT COMM SQ	7,100
ALPENA COUNTY REGIONAL AIRPORT	MICHIGAN	FIREMEN TRAINING FACILITY	750
GULFPORT	MISSISSIPPI	OPERATIONS AND ACMI SUPPORT	2,250
ROSECRANS MEMORIAL AIRPORT	MISSOURI	REPLACE AATTC CLASSROOM	2,150
SPRINGFIELD MAP	OHIO	MEDICAL TRAINING AND DINING FAC	4,300
CAMP RILEA ANG COMMUNICATIONS SITE	OREGON	COMM ELECTRONICS TRAINING COMPLEX	4,650
MEMPHIS IAP	TENNESSEE	C-141 FLIGHT SIMULATOR	3,500
VOLK FIELD	WISCONSIN	FIREMEN TRAINING FACILITY	700
**AIR NATIONAL GUARD			25,400
ARMY RESERVE			
FORT MCPHERSON	GEORGIA	USAR COMMAND HQ BLDG PH II	21,400
FORT SHAFTER	HAWAII	USAR CENTER	9,500
LAS VEGAS	NEVADA	AFRC/OMS PHASE I	10,000
NORTH CHARLESTON	SOUTH CAROLINA	USARC/OMS/AMSA	8,560
**ARMY RESERVE			49,460
NAVY RESERVE			
DOBBINS AFB	GEORGIA	RESERVE TRAINING CENTER ADDITION	4,600
HMS 41 DET MARIETTA	GEORGIA	RESERVE TRAINING BUILDING	2,650
NAVMARCORESCEN FOLSOM	PENNSYLVANIA	TRAINING CENTER RENOVATION	2,300
NAVRESCEN SEATTLE	WASHINGTON	JOINT TRAINING CENTER CONSTRUCTION	10,400
**NAVY RESERVE			19,950
AIR FORCE RESERVE			
DOBBINS AFB	GEORGIA	FIRE FIGHTER DEVELOPMENT CENTER	1,100
BILLY MITCHELL FIELD	WISCONSIN	FIRE FIGHTER TRAINING FACILITY	1,450
**AIR FORCE RESERVE			2,550
** TRAINING FACILITIES			313,350
MAINTENANCE & PRODUCTION FACILITIES			
ARMY			
FORT GORDON	GEORGIA	BRIGADE VEHICLE MAINTENANCE FACILITY	8,600
FORT GORDON	GEORGIA	CENTRAL VEHICLE WASH FACILITY	1,650
FORT GORDON	GEORGIA	CONSOLIDATED MAINTENANCE FACILITY	11,000
FORT CAMPBELL	KENTUCKY	TACTICAL EQUIPMENT SHOP	8,000
TOBYHANNA ARMY DEPOT	PENNSYLVANIA	INDUSTRIAL OPERATIONS FACILITY	17,000
FORT BLISS	TEXAS	TACTICAL EQUIPMENT SHOP	11,200
FORT HOOD	TEXAS	CONSOLIDATED MAINTENANCE FACILITY PHASE IV	8,800
FORT HOOD	TEXAS	TACTICAL EQUIPMENT SHOP	8,000
**ARMY			74,250

FY 1995 MILITARY CONSTRUCTION TOTAL OBLIGATIONAL AUTHORITY AS ENACTED

ACTIVE GUARD AND RESERVE FORCES
BY TYPE OF FACILITY
($ THOUSANDS)

DATA AS OF FEB 1995

INSTALLATION	LOCATION	PROJECT	TOTAL
MAINTENANCE & PRODUCTION FACILITIES			
NAVY			
CAMP PENDLETON AMPHIBIOUS TASK FORCE	CALIFORNIA	LANDING CRAFT AIR CUSHION FACS (INCR V)	10,700
CRANE NAVAL SURFACE WARFARE CENTER DIV	INDIANA	ELECTRO-OPTICS CENTER	7,970
PHILADELPHIA NAVAL SHIPYARD	PENNSYLVANIA	FOUNDRY RENOVATION	4,500
BEAUFORT MARINE CORPS AIR STATION	SOUTH CAROLINA	SUPPORT FACILITIES RENOVATION	10,800
**NAVY			33,970
AIR FORCE			
MCCLELLAN AFB	CALIFORNIA	NEAR FIELD TEST RANGE	8,500
WHITEMAN AFB	MISSOURI	B-2 AIRCRAFT MAINT DOCKS/HYDRANT FUELING	15,000
HOLLOMAN AFB	NEW MEXICO	F-117A HANGAR	7,000
TINKER AFB	OKLAHOMA	CORROSION CONTROL FACILITY (DBOF)	8,400
RAF LAKENHEATH	UNITED KINGDOM	F-15E ADD TO MUNITIONS MAINTENANCE FAC	850
OVERSEAS CLASSIFIED	OVERSEAS CLASSIFIED	WAR READINESS MAINTENANCE/MANAGEMENT FAC	1,300
**AIR FORCE			41,050
SPECIAL OPERATIONS COMMAND			
EGLIN AUX FIELD 9	FLORIDA	MC-130 NOSE DOCK (H)	5,000
**SPECIAL OPERATIONS COMMAND			5,000
DEFENSE LOGISTICS AGENCY			
DEF FUEL SUPPORT POINT CRANEY ISLAND	VIRGINIA	MAINTENANCE & OPERATIONS FACILITY	3,652
**DEFENSE LOGISTICS AGENCY			3,652
ARMY NATIONAL GUARD			
MOBILE	ALABAMA	AASF	7,200
WARREN	ARKANSAS	OMS	802
CAMP DODGE	IOWA	OMSS	877
FORT RILEY	KANSAS	MATES ADD/ALT	1,700
WESTFIELD	MASSACHUSETTS	OMS ADD/ALT	1,200
DUNLAP	TENNESSEE	OMSS	715
MILAN	TENNESSEE	UTES	825
TRENTON	TENNESSEE	OMS	630
MARSHALL	TEXAS	OMS ADD/ALT	830
WYLIE	TEXAS	OMS	1,261
**ARMY NATIONAL GUARD			16,040
AIR NATIONAL GUARD			
KULIS ANGB	ALASKA	BASE ENGINEER AND DISASTER FAC	5,300
FT SMITH MAP	ARKANSAS	MUNITIONS MAINT STOR COMPLEX	2,200
MOFFETT NAS	CALIFORNIA	ALTER VEHICLE MAINTENANCE FACILITY	400
ROBINS AFB	GEORGIA	B-1 HANGER COMPLEX	8,400
FT WAYNE MAP	INDIANA	FUEL SYSTEMS MAINTENANCE & CORROSION FAC	5,200
DES MOINES MAP	IOWA	MUNITIONS MAINTENANCE FACILITY	3,900
NEW ORLEANS NAS	LOUISIANA	ADD TO AND ALTER MAINTENANCE	5,100
BANGOR IAP	MAINE	REFUELING VEHICLE MAINTENANCE FACILITY	379
ROSECRANS MEMORIAL AIRPORT	MISSOURI	BASE CIVIL ENGINEERING	3,000
GREAT FALLS IAP	MONTANA	ADAL FUEL CELL AND CORROSION CONTROL HANG	1,150
GREAT FALLS IAP	MONTANA	MUNITIONS MAINTENANCE/STORA	3,150
TOLEDO EXPRESS AIRPORT	OHIO	BASE CIVIL ENGINEER	2,540
MEMPHIS IAP	TENNESSEE	VEHICLE MAINTENANCE/AGE	1,900
NASHVILLE MAP	TENNESSEE	VEHICLE MAINTENANCE COMPLEX	2,250
TRUAX FIELD	WISCONSIN	ADAL AGE SHOP/STORAGE	340
PUERTO RICO IAP	PUERTO RICO	ADD TO AND ALTER AIRCRAFT CORROSION FAC	750
**AIR NATIONAL GUARD			45,959

FY 1995 MILITARY CONSTRUCTION TOTAL OBLIGATIONAL AUTHORITY AS ENACTED

ACTIVE GUARD AND RESERVE FORCES
BY TYPE OF FACILITY
($ THOUSANDS)

DATA AS OF FEB 1995

INSTALLATION	LOCATION	PROJECT	TOTAL
MAINTENANCE & PRODUCTION FACILITIES			
AIR FORCE RESERVE			
LUKE AFB	ARIZONA	AVIONICS MAINTENANCE FACILITY	1,800
BILLY MITCHELL FIELD	WISCONSIN	INSTALL AIR EMISSION CONTROL DEVICE	750
**AIR FORCE RESERVE			2,550
** MAINTENANCE & PRODUCTION FACILITIES			222,471
R&D FACILITIES			
ARMY			
ADELPHI LAB CENTER	MARYLAND	COMPUTER CENTER	6,600
**ARMY			6,600
NAVY			
PATUXENT RIVER NAVAL AIR STATION	MARYLAND	ADVANCED SYS INTEGRATION FAC (PHASE III)	10,000
PATUXENT RIVER NAVAL AIR STATION	MARYLAND	AIR INTEROPERABILITY CENTER	4,200
WHITE SANDS NAVAL ORD MISSILE TEST STA	NEW MEXICO	WEAPONS TEST RANGE	1,390
**NAVY			15,590
AIR FORCE			
EDWARDS AFB	CALIFORNIA	F-22 ALTER ENGINEERING TEST FACILITY	4,550
EGLIN AFB	FLORIDA	RENOVATE CLIMATIC TEST CHAMBER PHASE III	20,000
WRIGHT-PATTERSON AFB	OHIO	ACQUISITION MANAGEMENT COMPLEX	18,300
BROOKS AFB	TEXAS	DIRECTED ENERGY LABORTORY	6,500
**AIR FORCE			49,350
** R&D FACILITIES			71,540
SUPPLY FACILITIES			
ARMY			
FORT BENNING	GEORGIA	MOBILIZATION DEPLOYMENT WAREHOUSE	4,650
SUNNY POINT ARMY TERM	NORTH CAROLINA	HOLDING PAD	5,700
CAMP CASEY	KOREA	BARRACKS	24,000
**ARMY			34,350
AIR FORCE			
MOODY AFB	GEORGIA	SUPPLY/WRSK WAREHOUSE	1,600
BARKSDALE AFB	LOUISIANA	MUNITIONS STORAGE FACILITIES	6,000
COLUMBUS AFB	MISSISSIPPI	T-1 SPECIALIZED UPT MAINT SUPPORT	3,200
FAIRCHILD AFB	WASHINGTON	HAZARDOUS MATERIAL STORAGE FACILITY	1,400
OVERSEAS CLASSIFIED	OVERSEAS CLASSIFIED	WAR READINESS MATERIEL MEDICAL STORAGE FAC	2,100
OVERSEAS CLASSIFIED	OVERSEAS CLASSIFIED	WAR READINESS MATERIEL OPEN STORAGE FAC	650
**AIR FORCE			14,950
ARMY NATIONAL GUARD			
LOS ALAMITOS AFRC	CALIFORNIA	TRN SITE, DIRECT SPT LOG FAC	4,218
CAMP ATTERBURY	INDIANA	TNG SITE, AMMO STORAGE POINT	7,340
STOUT FIELD (INIDIANAPOLIS)	INDIANA	USPFO WAREHOUSE	4,137
EASTOVER	SOUTH CAROLINA	TNG SITE, CLASS IX ACT	2,300
CAMP WILLIAMS	UTAH	TNG SITE, TISA PHII	2,290
**ARMY NATIONAL GUARD			20,285
AIR NATIONAL GUARD			
VOLK FIELD	WISCONSIN	BASE FACILITY IMPROVEMENTS	4,900
**AIR NATIONAL GUARD			4,900

FY 1995 MILITARY CONSTRUCTION TOTAL OBLIGATIONAL AUTHORITY AS ENACTED

ACTIVE GUARD AND RESERVE FORCES
BY TYPE OF FACILITY
($ THOUSANDS)

DATA AS OF FEB 1995

INSTALLATION	LOCATION	PROJECT	TOTAL
SUPPLY FACILITIES			
AIR FORCE RESERVE			
HOMESTEAD AFB	FLORIDA	MOBILITY PROCESSING SUPPORT SYSTEM	1,150
**AIR FORCE RESERVE			1,150
** SUPPLY FACILITIES			75,635
HOSPITAL AND MEDICAL FACILITIES			
DEFENSE MEDICAL SUPPORT ACTIVITY			
ELMENDORF AIR FORCE BASE	ALASKA	#HOSPITAL REPLACEMENT PHASE III	66,000
MCCLELLAN AIR FORCE BASE	CALIFORNIA	LIFE SAFETY/SEISMIC/UTILITY UPGRADE	10,280
FORT MCPHERSON	GEORGIA	MEDICAL/DENTAL CLINIC REPLACEMENT	13,300
FORT DIX	NEW JERSEY	HOSPITAL LIFE SAFETY UPGRADE	2,000
FORT BRAGG	NORTH CAROLINA	#HOSPITAL REPLACEMENT PHASE III	75,000
PORTSMOUTH NAVAL HOSPITAL	VIRGINIA	#HOSPITAL REPLACEMENT PHASE VI	120,000
**DEFENSE MEDICAL SUPPORT ACTIVITY			286,580
AUTHORIZED IN PRIOR YEAR			(261,000)
ADMINSTRATIVE FACILITIES			
ARMY			
FORT LEE	VIRGINIA	SOLDIERS ONE STOP CENTER	4,600
**ARMY			4,600
AIR FORCE			
BEALE AFB	CALIFORNIA	CONSOLIDATED SUPPORT CTR	10,400
CAPE CANAVERAL AFS	FLORIDA	DELTA LAUNCH OPERATIONS FACILITY	7,000
ROBINS AFB	GEORGIA	ALTER WEAPONS SYSTEM SUPPORT CENTER	4,700
ROBINS AFB	GEORGIA	J-STARS ADD TO INTEGRATED SUPPORT FACILITY	3,100
KIRTLAND AFB	NEW MEXICO	ALTER BASE SUPPORT FACILITIES	9,500
ELLSWORTH AFB	SOUTH DAKOTA	CONSOLIDATED ADMIN SPT CTR, PH 2	4,500
FAIRCHILD AFB	WASHINGTON	SURVIVAL TRAINING SPT FACILITY	3,750
MCCHORD AFB	WASHINGTON	ADAL CONSOLIDATED SUPPORT CENTER	7,700
**AIR FORCE			50,650
DEFENSE LOGISTICS AGENCY			
DEF CONTRACT MGMT OFC - EL SUGUNDO	CALIFORNIA	ADMINISTRATIVE BUILDING(CONJUNCTIVE FUND)	5,100
**DEFENSE LOGISTICS AGENCY			5,100
** ADMINSTRATIVE FACILITIES			60,350
TROOP HOUSING FACILITIES			
ARMY			
FORT GORDON	GEORGIA	WHOLE BARRACKS RENEWAL	21,000
SCHOFIELD BARRACKS	HAWAII	WHOLE BARRACKS RENEWAL	20,700
FORT CAMPBELL	KENTUCKY	WHOLE BARRACKS RENEWAL	22,000
U S MILITARY ACADEMY	NEW YORK	RENOVATE FOOD PROCESSING FACILITY	28,000
FORT BRAGG	NORTH CAROLINA	WHOLE BARRACKS RENEWAL	29,000
FORT SILL	OKLAHOMA	WHOLE BARRACKS RENEWAL	18,000
FORT HOOD	TEXAS	WHOLE BARRACKS RENEWAL	29,000
FORT MYER	VIRGINIA	WHOLE BARRACKS RENEWAL	7,300
FORT LEWIS	WASHINGTON	WHOLE BARRACKS RENEWAL	32,000
FORT LEWIS	WASHINGTON	WHOLE BARRACKS RENEWAL	32,000
CAMP CASEY	KOREA	BARRACKS	5,200

AUTHORIZED IN PRIOR YEAR

FY 1995 MILITARY CONSTRUCTION TOTAL OBLIGATIONAL AUTHORITY AS ENACTED

ACTIVE GUARD AND RESERVE FORCES
BY TYPE OF FACILITY
($ THOUSANDS)

DATA AS OF FEB 1995

INSTALLATION	LOCATION	PROJECT	TOTAL
TROOP HOUSING FACILITIES			
ARMY			
CAMP RED CLOUD	KOREA	BARRACKS	5,400
**ARMY			249,600
NAVY			
LEMOORE NAVAL AIR STATION	CALIFORNIA	BACHELOR ENLISTED QUARTERS MODERNIZATION	7,000
NORFOLK MARINE CORPS SEC FORCE BATT LANT	VIRGINIA	BACHELOR ENLISTED QUARTERS	6,480
NORFOLK NAVAL STATION	VIRGINIA	BACHELOR ENLISTED QUARTERS	16,430
EVERETT NAVAL STATION	WASHINGTON	BACHELOR ENLISTED QUARTERS	7,450
NAPLES NAVAL SUPPORT ACTIVITY	ITALY	BACHELOR ENLISTED QUARTERS	19,360
SIGONELLA NAVAL AIR STATION	ITALY	BACHELOR ENLISTED QUARTERS	13,750
**NAVY			70,470
AIR FORCE			
MAXWELL AFB	ALABAMA	STUDENT DORMITORIES	9,600
LUKE AFB	ARIZONA	STUDENT PILOT QUARTERS	4,900
LITTLE ROCK AFB	ARKANSAS	DORMITORY	4,800
TRAVIS AFB	CALIFORNIA	DORMITORY	2,300
DOVER AFB	DELAWARE	DORMITORY	4,600
MOODY AFB	GEORGIA	CONSTRUCT UEPH DORMITORY	3,800
ROBINS AFB	GEORGIA	J-STARS DORMITORY	5,525
ROBINS AFB	GEORGIA	J-STARS EXPANDED FLIGHT KITCHEN	1,850
MOUNTAIN HOME AFB	IDAHO	DORMITORY	4,950
ANDREWS AFB	MARYLAND	DORMITORY	6,300
COLUMBUS AFB	MISSISSIPPI	ENLISTED DORMITORY	10,000
KEESLER AFB	MISSISSIPPI	7-LEVEL TRAINING DORMITORY	8,800
MCGUIRE AFB	NEW JERSEY	DORMITORY	8,700
MCGUIRE AFB	NEW JERSEY	DORMITORY	1,600
HOLLOMAN AFB	NEW MEXICO	DORMITORY	3,950
ALTUS AFB	OKLAHOMA	ADD TO AND ALTER DORMITORY	3,750
VANCE AFB	OKLAHOMA	ALTER DORMITORIES	2,300
CHARLESTON AFB	SOUTH CAROLINA	ALTER DORMITORIES	9,900
KELLY AFB	TEXAS	ADD TO AND ALTER DORMITORY	2,250
LACKLAND AFB	TEXAS	ALTER RECRUIT DORMITORY	3,400
RAF LAKENHEATH	UNITED KINGDOM	ADD TO AND ALTER DORMITORY	3,700
**AIR FORCE			106,975
AIR NATIONAL GUARD			
GULFPORT	MISSISSIPPI	TROOP TRAINING QUARTERS	5,300
BURLINGTON IAP	VERMONT	DINING HALL, MEDICAL TRAINING FAC	4,800
**AIR NATIONAL GUARD			10,100
AIR FORCE RESERVE			
EGLIN AFB	FLORIDA	RENOVATE AIRMEN DINING FACILITY	2,650
HOMESTEAD AFB	FLORIDA	RENOVATE BARRACKS QUARTERS	2,550
**AIR FORCE RESERVE			5,200
** TROOP HOUSING FACILITIES			442,345
COMMUNITY FACILITIES			
ARMY			
REDSTONE ARSENAL	ALABAMA	PHYSICAL FITNESS TRAINING CENTER	2,600
FORT CAMPBELL	KENTUCKY	EDUCATION CENTER (PHASE 1)	8,100
**ARMY			10,700

FY 1995 MILITARY CONSTRUCTION TOTAL OBLIGATIONAL AUTHORITY AS ENACTED

ACTIVE GUARD AND RESERVE FORCES
BY TYPE OF FACILITY
($ THOUSANDS)

DATA AS OF FEB 1995

INSTALLATION	LOCATION	PROJECT	TOTAL
COMMUNITY FACILITIES			
NAVY			
SAN DIEGO MARINE CORPS RECRUIT DEPOT	CALIFORNIA	PERSONAL HYGIENE FACILITIES	1,090
SAN DIEGO NAVAL STATION	CALIFORNIA	CHAPEL AND RELIGIOUS EDUCATION FACILITY	4,100
KANEOHE BAY MARINE CORPS AIR STATION	HAWAII	CHILD DEVELOPMENT CENTER	4,900
ANNAPOLIS NAVAL ACADEMY	MARYLAND	FIRE STATION	1,900
PARRIS ISLAND MARINE CORPS RECRUIT DEPOT	SOUTH CAROLINA	CHILD DEVELOPMENT CENTER	2,550
CHESAPEAKE NAVAL SECURITY GROUP ACT NW	VIRGINIA	CHILD DEVELOPMENT CENTER	1,150
DAM NECK FLEET COMBAT TRAIN CTR ATLANTIC	VIRGINIA	CHILD DEVELOPMENT CENTER	1,600
LITTLE CREEK NAVAL AMPHIBIOUS BASE	VIRGINIA	FIRE STATION	5,000
NORFOLK NAVAL STATION	VIRGINIA	FAMILY SERVICES CENTER	5,100
EVERETT NAVAL STATION	WASHINGTON	CHILD DEVELOPMENT CENTER	2,900
EVERETT NAVAL STATION	WASHINGTON	FLEET RECREATION CENTER	3,000
EVERETT NAVAL STATION	WASHINGTON	PHYSICAL FITNESS FACILITIES	6,840
NAPLES NAVAL SUPPORT ACTIVITY	ITALY	QUALITY OF LIFE FACILITIES (INCREMENT II)	9,100
ST MAWGAN JOINT MARITIME COMMUNICATION CTR	UNITED KINGDOM	CHILD DEVELOPMENT AND YOUTH CENTER	3,900
**NAVY			53,130
AIR FORCE			
KIRTLAND AFB	NEW MEXICO	CHILD DEVELOPMENT CENTER	3,500
LANGLEY AFB	VIRGINIA	CHILD DEVELOPMENT CENTER	5,500
SPANGDAHLEM AB	GERMANY	CHILD DEVELOPMENT CENTER	2,273
**AIR FORCE			11,273
DEFENSE LOGISTICS AGENCY			
DEFENSE CONSTRUCTION SUPPLY CENTER	OHIO	FIRE STATION	2,200
FT. BELVOIR	VIRGINIA	CHILD DEVELOPMENT CENTER	4,600
**DEFENSE LOGISTICS AGENCY			6,800
DOD DEPENDENT SCHOOLS			
DAHLGREN NAVAL SURFACE WARFARE CENTER	VIRGINIA	DAHLGREN NSWC DEPENDENT SCHOOL ADD	1,560
**DOD DEPENDENT SCHOOLS			1,560
AIR NATIONAL GUARD			
FT WAYNE MAP	INDIANA	FIRE STATION AND AGE SHOP	1,950
WK KELLOGG REGIONAL AIRPORT	MICHIGAN	FIRE STATION & AIRCRAFT GROUND EQUIP SHOP	1,600
ALLEN C THOMPSON FIELD	MISSISSIPPI	FIRE STATION	1,750
SCHENECTADY AIRPORT ANG	NEW YORK	FIRE STATION, AGE, SECURITY & MEDICAL	3,200
**AIR NATIONAL GUARD			8,500
AIR FORCE RESERVE			
HOMESTEAD AFB	FLORIDA	REPAIR PHYSICAL FITNESS CENTER	1,400
**AIR FORCE RESERVE			1,400
** COMMUNITY FACILITIES			93,363
UTILITY FACILITIES			
ARMY			
FORT CAMPBELL	KENTUCKY	RAILROAD TRACK	14,400
ABERDEEN PROVING GROUND	MARYLAND	ELECTRICAL DISTRIBUTION FACILITY	2,600
FORT SAM HOUSTON	TEXAS	SEWAGE TREATMENT PLANT - CAMP BULLIS	4,300
FORT LEE	VIRGINIA	REPAIR ELECTRICAL DISTRIBUTION (PH1)	11,000
KWAJALEIN	KWAJALEIN	COVER RAW WATER TANKS	5,200
KWAJALEIN	KWAJALEIN	FUEL CONTAINMENT FACILITY	1,200
**ARMY			38,700

FY 1995 MILITARY CONSTRUCTION TOTAL OBLIGATIONAL AUTHORITY AS ENACTED

ACTIVE GUARD AND RESERVE FORCES
BY TYPE OF FACILITY
($ THOUSANDS)

DATA AS OF FEB 1995

INSTALLATION	LOCATION	PROJECT	TOTAL
UTILITY FACILITIES			
NAVY			
EL CENTRO NAVAL AIR FACILITY	CALIFORNIA	POTABLE WATER DISTRIBUTION SYSTEM UPGRADE	1,500
PORT HUENEME NAVAL CONSTR BATTALION CTR	CALIFORNIA	WATER PROCESSING SYSTEM UPGRADE	4,800
INDIAN HEAD NAVAL SURFACE WARFARE CTR DIV	MARYLAND	POWER PLANT UPGRADES	4,000
PHILADELPHIA NAVAL SHIPYARD	PENNSYLVANIA	UTILITIES RECONFIGURATION	14,200
EVERETT NAVAL STATION	WASHINGTON	HAZARDOUS WASTE STORAGE AND TRANSFER FAC	1,500
**NAVY			26,000
AIR FORCE			
ELMENDORF AFB	ALASKA	COMMUNITY CENTER UTILITIES	1,000
VANDENBERG AFB	CALIFORNIA	SLFI-UPGRADE NATURAL GAS SYSTEM	5,000
CAPE CANAVERAL AFS	FLORIDA	SLFI-UPGRADE ELECTRICAL DISTRIBUTION SYS	1,750
ROBINS AFB	GEORGIA	J-STARS UTILITIES/ MISCELLANEOUS SUPPORT	3,825
KEESLER AFB	MISSISSIPPI	UPGRADE FIRE SUPPRESSION SYSTEM	640
WHITEMAN AFB	MISSOURI	B-2 ADAL DOCK & HANGAR FIRE PROTECTION SYS	3,400
NELLIS AFB	NEVADA	RELOCATE WATER STORAGE	600
KIRTLAND AFB	NEW MEXICO	ADAL BASE WATER SYSTEM	8,800
KIRTLAND AFB	NEW MEXICO	UPGRADE ELECTRICAL DISTRIBUTION SYSTEM	3,000
POPE AFB	NORTH CAROLINA	*BRIDGE, ROAD, AND UTILITIES	4,000
FAIRCHILD AFB	WASHINGTON	STORM DRAINAGE FACILITIES	2,450
**AIR FORCE			34,465
AUTHORIZED FOR APPROP IN PRIOR YEAR			(4,000)
DEFENSE LEVEL ACTIVITIES			
UNSPECIFIED WORLDWIDE LOCATIONS	WORLDWIDE UNSPECIFIED	CONTINGENCY CONSTRUCTION	16,140
**DEFENSE LEVEL ACTIVITIES			16,140
NATIONAL SECURITY AGENCY			
FORT MEADE	MARYLAND	CRITICAL SUBSTATION CONTROL	5,458
**NATIONAL SECURITY AGENCY			5,458
DEF INTELLIGENCE AGENCY			
BOLLING AFB	DISTRICT OF COLUMBIA	CHILLER COOLING TOWER DIAC	600
**DEF INTELLIGENCE AGENCY			600
AIR NATIONAL GUARD			
BOISE AIRPORT	IDAHO	UPGRADE BASE DRAINAGE	380
DES MOINES MAP	IOWA	FIRE SUPPRESSION SYSTEM	2,300
FORBES FIELD	KANSAS	UPGRADE SANITARY SEWER SYS	670
SELFRIDGE ANGB	MICHIGAN	UPGRADE ACCESS ROADS AND MAIN	2,045
SELFRIDGE ANGB	MICHIGAN	UPGRADE HEATING SYSTEM	5,400
SELFRIDGE ANGB	MICHIGAN	UPGRADE SANITARY SEWER SYSTEM	610
SELFRIDGE ANGB	MICHIGAN	UPGRADE STORM DRAINAGE SYSTEM	840
TOLEDO EXPRESS AIRPORT	OHIO	AIRCRAFT DEICING APRON	320
PORTLAND IAP	OREGON	SITE RESTORATION	1,700
BILLY MITCHELL FIELD	WISCONSIN	REPLACE CENTRAL HEAT PLANT	800
**AIR NATIONAL GUARD			15,065
AIR FORCE RESERVE			
MARCH AFB	CALIFORNIA	REPLACE SUBSTATION	3,900
YOUNGSTOWN MAP	OHIO	INDUSTRIAL WASTEWATER PRETREATMENT FAC	500
**AIR FORCE RESERVE			4,400
** UTILITY FACILITIES			140,828
AUTHORIZED FOR APPROP IN PRIOR YEAR			(4,000)

* AUTHORIZED FOR APPROP IN PRIOR YEAR

FY 1995 MILITARY CONSTRUCTION TOTAL OBLIGATIONAL AUTHORITY AS ENACTED

ACTIVE GUARD AND RESERVE FORCES
BY TYPE OF FACILITY
($ THOUSANDS)

DATA AS OF FEB 1995

INSTALLATION	LOCATION	PROJECT	TOTAL
REAL ESTATE			
ARMY			
CONGRESSIONAL REDUCTIONS	WORLDWIDE VARIOUS	GENERAL REDUCTION	-40,000
OVERSEAS VARIOUS LOCATIONS	WORLDWIDE VARIOUS	HOST NATION SUPPORT	10,000
**ARMY			-30,000
NAVY			
DAM NECK FLEET COMBAT TRAIN CTR ATLANTIC	VIRGINIA	LAND ACQUISITION	4,850
BREMERTON PUGET SOUND NAVAL SHIPYARD	WASHINGTON	UTILITIES AND SITE IMPROVEMENTS	7,840
**NAVY			12,690
AIR FORCE			
CONGRESSIONAL REDUCTIONS	WORLDWIDE VARIOUS	GENERAL REDUCTION	-40,000
**AIR FORCE			-40,000
AIR NATIONAL GUARD			
CONGRESSIONAL REDUCTIONS	WORLDWIDE VARIOUS	GENERAL REDUCTION	-465
**AIR NATIONAL GUARD			-465
** REAL ESTATE			-57,775
AIR POLLUTION ABATEMENT			
AIR FORCE			
CAPE CANAVERAL AFS	FLORIDA	CORROSION CONTROL FACILITY	1,700
LAJES FIELD	PORTUGAL	REFUSE INCINERATOR	2,850
**AIR FORCE			4,550
WATER POLLUTION ABATEMENT			
NAVY			
CHINA LAKE NAVAL AIR WARFARE CTR WPNS DIV	CALIFORNIA	AIRCRAFT READY FUEL STORAGE FACILITY	6,000
EL CENTRO NAVAL AIR FACILITY	CALIFORNIA	WASTEWATER TREATMENT PLANT UPGRADE	1,500
PORT HUENEME NAVAL CONSTR BATTALION CTR	CALIFORNIA	ABRASIVE BLAST AND PAINT SPRAY FACILITY	4,850
JACKSONVILLE FLT & INDUSTRIAL SUPPLY CENTER	FLORIDA	HAZARDOUS AND FLAMMABLE STOREHOUSE ADDN	2,200
GREAT LAKES PUBLIC WORKS CENTER NAVY	ILLINOIS	SANITARY SEWER SYSTEM UPGRADE	13,000
INDIAN HEAD NAVAL SURFACE WARFARE CTR DIV	MARYLAND	DENITRATION AND ACID MIX FACILITY	6,400
LAKEHURST NAVAIRWARFARE CTR AIRCRAFT DIV	NEW JERSEY	POTABLE WATER DISTRIBUTION SYSTEM ADDN	2,950
CAMP LEJEUNE MARINE CORPS BASE	NORTH CAROLINA	OIL SPILL PREVENTION	4,450
NEWPORT NAVAL EDUCATION & TRAINING CENTER	RHODE ISLAND	SANITARY SEWER SYSTEM UPGRADES	14,500
QUANTICO MARINE CORPS COMBAT DEV COMMAND	VIRGINIA	SEWAGE TREATMENT PLANT	19,900
BREMERTON PUGET SOUND NAVAL SHIPYARD	WASHINGTON	INDUSTRIAL WASTEWATER TREATMENT FACILITY	3,200
WHIDBEY ISLAND NAVAL AIR STATION	WASHINGTON	INDUSTRIAL WASTEWATER PRETREATMENT FAC	1,400
WHIDBEY ISLAND NAVAL AIR STATION	WASHINGTON	WASTEWATER TREATMENT PLANT UPGRADE	2,400
**NAVY			82,750
AIR FORCE			
CAPE LISBURNE	ALASKA	UPGRADE FUEL STORAGE SYSTEM	2,800
BEALE AFB	CALIFORNIA	STORM DRAINAGE FACILITIES	1,450
EDWARDS AFB	CALIFORNIA	UPGRADE HYDRANT FUELING SYSTEM	2,500
TRAVIS AFB	CALIFORNIA	FIRE TRAINING FACILITY	1,300
VANDENBERG AFB	CALIFORNIA	FIRE TRAINING FACILITY	1,550
PETERSON AFB	COLORADO	UNDERGROUND FUEL STORAGE TANKS	1,750
ROBINS AFB	GEORGIA	UPGRADE STORM DRAINAGE SYSTEM	2,200
SCOTT AFB	ILLINOIS	UNDERGROUND FUEL STORAGE TANKS	2,700

FY 1995 MILITARY CONSTRUCTION TOTAL OBLIGATIONAL AUTHORITY AS ENACTED

ACTIVE GUARD AND RESERVE FORCES
BY TYPE OF FACILITY
($ THOUSANDS)

DATA AS OF FEB 1995

INSTALLATION	LOCATION	PROJECT	TOTAL
WATER POLLUTION ABATEMENT			
AIR FORCE			
MCCONNELL AFB	KANSAS	STORM DRAINAGE FACILITIES	500
BARKSDALE AFB	LOUISIANA	STORM DRAINAGE FACILITIES	1,500
WHITEMAN AFB	MISSOURI	STORM DRAINAGE FACILITIES	1,290
MALMSTROM AFB	MONTANA	UNDERGROUND FUEL STORAGE TANKS	3,200
MALMSTROM AFB	MONTANA	UNGD FUEL STORAGE TANKS MINUTEMAN III FACS	4,000
OFFUTT AFB	NEBRASKA	STORM DRAINAGE FACILITIES	1,500
OFFUTT AFB	NEBRASKA	UNDERGROUND FUEL STORAGE TANKS	760
MCGUIRE AFB	NEW JERSEY	UPGRADE SANITARY SEWER SYSTEM	4,800
MCGUIRE AFB	NEW JERSEY	UPGRADE STORM DRAINAGE FACILITIES	1,900
KIRTLAND AFB	NEW MEXICO	UNDERGROUND FUEL STORAGE TANKS	3,200
POPE AFB	NORTH CAROLINA	FIRE TRAINING FACILITY	1,100
GRAND FORKS AFB	NORTH DAKOTA	UNGD FUEL STORAGE TANKS - MISSILE FACS	5,200
MINOT AFB	NORTH DAKOTA	STORM DRAINAGE FACILITIES	1,500
MINOT AFB	NORTH DAKOTA	UNDERGROUND FUEL STORAGE TANKS	1,400
MINOT AFB	NORTH DAKOTA	UNGD FUEL STORAGE TANKS - MISSILE FACS	2,950
WRIGHT-PATTERSON AFB	OHIO	UPGRADE STORM DRAINAGE SYSTEM	3,350
TINKER AFB	OKLAHOMA	STORM DRAINAGE SYSTEM	1,243
VANCE AFB	OKLAHOMA	FIRE TRAINING FACILITY	980
VANCE AFB	OKLAHOMA	UPGRADE SANITARY SEWER SYSTEM	1,100
VANCE AFB	OKLAHOMA	UPGRADE STORM DRAINAGE SYSTEM	1,800
CHARLESTON AFB	SOUTH CAROLINA	UPGRADE HAZARDOUS WASTE STORAGE FACILITY	1,500
ELLSWORTH AFB	SOUTH DAKOTA	STORM DRAINAGE FACILITIES	1,450
ARNOLD ENGINEERING DEV CENTER	TENNESSEE	HAZARDOUS WASTE/MATERIAL STORAGE FACILITY	1,900
KELLY AFB	TEXAS	UPGRADE HYDRANT FUELING SYSTEMS	3,700
KELLY AFB	TEXAS	UPGRADE SANITARY SEWER LINES	3,000
F E WARREN AFB	WYOMING	UNGD FUEL STORAGE TANKS - MISSILE FAC	2,650
RAMSTEIN AB	GERMANY	HAZARDOUS WASTE STORAGE FACILITY	1,150
RAMSTEIN AB	GERMANY	UPGRADE SEWAGE COLLECTION SYSTEM	11,200
SPANGDAHLEM AB	GERMANY	UPGD SEWAGE TREATMENT PLANT & SEWER SYS	7,200
THULE AB	GREENLAND	FIRE TRAINING FACILITY	2,450
RAF LAKENHEATH	UNITED KINGDOM	UPGRADE STORM DRAINAGE SYSTEM	2,550
**AIR FORCE			98,273
AIR NATIONAL GUARD			
BIRMINGHAM MAP	ALABAMA	UPGRADE DRAINAGE SYSTEM	2,500
DANNELLY FIELD	ALABAMA	REPLACE UNDERGROUND FUEL STORAGE TANKS	700
FRESNO ANGB	CALIFORNIA	SITE RESTORATION	3,500
BUCKLEY ANGB	COLORADO	ADD TO F-16 FUEL CELL DOCK	1,300
BUCKLEY ANGB	COLORADO	AIRCRAFT WASHRACK AND DEICING PAD	400
FORBES FIELD	KANSAS	SITE RESTORATION & FUEL STRG TANK REMOVAL	2,950
STANDIFORD FIELD	KENTUCKY	FUEL CELL AND CORROSION CONTROL DOCK	2,950
BANGOR IAP	MAINE	REPLACE UNDERGROUND FUEL STORAGE TANKS	840
ALPENA COUNTY REGIONAL AIRPORT	MICHIGAN	REPLACE UNDERGROUND FUEL STORAGE TANKS	385
LINCOLN MAP	NEBRASKA	REPLACE UNDERGROUND FUEL STORAGE TANKS	500
MCGUIRE AFB	NEW JERSEY	REPLACE UNDERGROUND FUEL STORAGE TANKS	1,000
KIRTLAND AFB	NEW MEXICO	REPLACE UNDERGROUND FUEL STORAGE TANKS	900
HANCOCK FIELD	NEW YORK	REPLACE UNDERGROUND FUEL STORAGE TANKS	580
NIAGARA FALLS INTERNATIONAL AIRPORT	NEW YORK	REPLACE UNDERGROUND FUEL STORAGE TANKS	640
DOUGLAS MAP	NORTH CAROLINA	REPLACE UNDERGROUND FUEL STORAGE TANKS	690
MANSFIELD LAHM AIRPORT	OHIO	REPLACE UNDERGROUND FUEL STORAGE TANKS	770
SPRINGFIELD MAP	OHIO	ADAL FUEL CELL AND CORROSION CONTROL DOCK	1,250
SPRINGFIELD MAP	OHIO	REPLACE UNDERGROUND FUEL STORAGE TANKS	400
TULSA IAP	OKLAHOMA	REPLACE UNDERGROUND FUEL STORAGE TANKS	700
GREATER PITTSBURGH INTERNATIONAL AIRPORT	PENNSYLVANIA	REPLACE UNDERGROUND FUEL STORAGE TANKS	500
HARRISBURG IAP	PENNSYLVANIA	REPLACE UNDERGROUND FUEL STORAGE TANKS	690
FT INDIANTOWN ANG COMMUNICATIONS SITE	PENNSYLVANIA	REPLACE UNDERGROUND FUEL STORAGE TANKS	1,800
E WV REGIONAL APT (MARTINSBURG)	WEST VIRGINIA	REPLACE UNDERGROUND FUEL STORAGE TANKS	500
**AIR NATIONAL GUARD			26,445

FY 1995 MILITARY CONSTRUCTION TOTAL OBLIGATIONAL AUTHORITY AS ENACTED

ACTIVE GUARD AND RESERVE FORCES
BY TYPE OF FACILITY
($ THOUSANDS)

DATA AS OF FEB 1995

INSTALLATION	LOCATION	PROJECT	TOTAL
WATER POLLUTION ABATEMENT			
AIR FORCE RESERVE			
WESTOVER AFB	MASSACHUSETTS	REPLACE UNDERGROUND STORAGE TANKS	1,000
**AIR FORCE RESERVE			1,000
** WATER POLLUTION ABATEMENT			208,468
ENERGY CONSERVATION			
DEFENSE LEVEL ACTIVITIES			
UNSPECIFIED WORLDWIDE LOCATIONS	WORLDWIDE UNSPECIFIED	ENERGY CONSERVATION IMPROVEMENT PROGRAM	50,000
**DEFENSE LEVEL ACTIVITIES			50,000
UNSPECIFIED MINOR CONSTRUCTION			
ARMY	WORLDWIDE UNSPECIFIED		12,000
NAVY	WORLDWIDE UNSPECIFIED		7,000
AIR FORCE	WORLDWIDE UNSPECIFIED		7,000
SPECIAL OPERATIONS COMMAND	WORLDWIDE UNSPECIFIED		4,020
DEFENSE LEVEL ACTIVITIES	WORLDWIDE UNSPECIFIED		3,000
JOINT CHIEFS OF STAFF	WORLDWIDE UNSPECIFIED		5,873
DOD DEPENDENT SCHOOLS	WORLDWIDE UNSPECIFIED		4,430
DEFENSE MEDICAL SUPPORT ACTIVITY	WORLDWIDE UNSPECIFIED		5,025
ARMY NATIONAL GUARD	WORLDWIDE UNSPECIFIED		5,167
AIR NATIONAL GUARD	WORLDWIDE UNSPECIFIED		4,000
ARMY RESERVE	WORLDWIDE UNSPECIFIED		2,657
NAVY RESERVE	WORLDWIDE UNSPECIFIED		158
AIR FORCE RESERVE	WORLDWIDE UNSPECIFIED		4,000
** UNSPECIFIED MINOR CONSTRUCTION			64,330
PLANNING & DESIGN			
ARMY	WORLDWIDE UNSPECIFIED		10,000
ARMY	WORLDWIDE UNSPECIFIED		56,126
NAVY	WORLDWIDE UNSPECIFIED		43,380
AIR FORCE	WORLDWIDE UNSPECIFIED		49,386
SPECIAL OPERATIONS COMMAND	WORLDWIDE UNSPECIFIED		5,713
DEFENSE FINANCE AND ACCOUNTING SERVICE	WORLDWIDE UNSPECIFIED		6,000
BALLISTIC MISSILE DEFENSE ORAGNIZATION	WORLDWIDE UNSPECIFIED		530
DEFENSE LEVEL ACTIVITIES	WORLDWIDE UNSPECIFIED		12,360
DEF INTELLIGENCE AGENCY	WORLDWIDE UNSPECIFIED		450
DEFENSE MEDICAL SUPPORT ACTIVITY	WORLDWIDE UNSPECIFIED		26,907
ARMY NATIONAL GUARD	WORLDWIDE UNSPECIFIED		5,900
AIR NATIONAL GUARD	WORLDWIDE UNSPECIFIED		14,823
ARMY RESERVE	WORLDWIDE UNSPECIFIED		5,253
NAVY RESERVE	WORLDWIDE UNSPECIFIED		1,800
AIR FORCE RESERVE	WORLDWIDE UNSPECIFIED		3,500
** PLANNING & DESIGN			242,128
BASE REALIGNMENT & CLOSURE ACCT PART I			
DEFENSE LEVEL ACTIVITIES			
BASE REALIGNMENT & CLOSURE ACCT PART I	WORLDWIDE UNSPECIFIED	BASE REALIGNMENT & CLOSURE PART I	87,600
**DEFENSE LEVEL ACTIVITIES			87,600
BASE REALIGNMENT & CLOSURE ACCT PART II			
DEFENSE LEVEL ACTIVITIES			
BASE REALIGNMENT & CLOSURE ACCT PART II	WORLDWIDE UNSPECIFIED	BASE REALIGNMENT & CLOSURE PART II	607,489
**DEFENSE LEVEL ACTIVITIES			607,489

FY 1995 MILITARY CONSTRUCTION TOTAL OBLIGATIONAL AUTHORITY AS ENACTED

ACTIVE GUARD AND RESERVE FORCES
BY TYPE OF FACILITY
($ THOUSANDS)

DATA AS OF FEB 1995

INSTALLATION	LOCATION	PROJECT	TOTAL
BASE REALIGNMENT & CLOSURE ACCT PART III			
DEFENSE LEVEL ACTIVITIES			
BASE REALIGNMENT & CLOSURE ACCT PART III	WORLDWIDE UNSPECIFIED	BASE REALIGNMENT & CLOSURE ACCT PART III	2,114,069
**DEFENSE LEVEL ACTIVITIES			2,114,069
NATO INFRASTRUCTURE			
DEFENSE LEVEL ACTIVITIES			
OSD MILCON	WORLDWIDE UNSPECIFIED	NATO INFRASTRUCTURE	119,000
**DEFENSE LEVEL ACTIVITIES			119,000
TOTALS			
ARMY			795,908
NAVY			422,058
AIR FORCE			822,362
AUTHORIZED FOR APPROP IN PRIOR YEAR			(4,000)
DEFENSE AGENCIES			3,432,276
AUTHORIZED FOR APPROP IN PRIOR YEAR			(261,000)
*** TOTAL ***			5,472,604
AUTHORIZED FOR APPROP IN PRIOR YEAR			(265,000)

FY 1995 FAMILY HOUSING TOTAL OBLIGATIONAL AUTHORITY AS ENACTED

BY TYPE OF FACILITY
($ THOUSANDS)

DATA AS OF FEB 1995

INSTALLATION	LOCATION	PROJECT	TOTAL
FAMILY HOUSING, ARMY			
FT RICHARDSON	ALASKA	REPLACEMENT CONSTRUCTION (72)	5,000
FORT CARSON	COLORADO	REPLACEMENT CONSTRUCTION (145)	16,500
FORT STEWART	GEORGIA	#REPLACEMENT CONSTRUCTION (120) (MEMO-NON-ADD)	(9,700)
FORT STEWART	GEORGIA	REPLACEMENT CONSTRUCTION (128)	10,600
SCHOFIELD BARRACKS	HAWAII	REPLACEMENT CONSTRUCTION (190)	26,000
FORT LEAVENWORTH	KANSAS	REPLACEMENT CONSTRUCTION (126)	12,600
NATICK RESEARCH CENTER	MASSACHUSETTS	REPLACEMENT CONSTRUCTION (35)	4,150
U S MILITARY ACADEMY	NEW YORK	REPLACEMENT CONSTRUCTION (56)	8,000
FORT BLISS	TEXAS	REPLACEMENT CONSTRUCTION (105)	10,800
FORT BLISS	TEXAS	REPLACEMENT CONSTRUCTION (110)	10,600
FORT SAM HOUSTON	TEXAS	REPLACEMENT CONSTRUCTION (100)	10,000
		CONSTRUCTION IMPROVEMENTS	49,760
		PLANNING	5,992
		FURNISHINGS ACCOUNT	51,270
		MANAGEMENT ACCOUNT	83,241
		MISCELLANEOUS ACCOUNT	1,200
		SERVICES ACCOUNT	52,806
		UTILITIES ACCOUNT	266,077
		LEASING	234,441
		MAINTENANCE OF REAL PROPERTY	324,662
		INTEREST PAYMENTS	11
TOTAL FAMILY HOUSING, ARMY			1,183,710
(MEMO-NON-ADD)			(9,700)
FAMILY HOUSING, NAVY			
MARINE CORPS BASE CAMP PENDLETON	CALIFORNIA	NEW CONSTRUCTION (196 HOMES)	28,552
PUBLIC WORKS CENTER SAN DIEGO	CALIFORNIA	NEW CONSTRUCTION (136 HOMES)	18,262
NAVAL COMPLEX, OAHU	HAWAII	100 UNITS REPLACEMENT	16,000
NAVAL AIR TEST CENTER PATUXENT RIVER	MARYLAND	NEW CONSTRUCTION (HSG OFFICE)	863
NCBC GULFPORT MS	MISSISSIPPI	120 UNITS NEW CONSTRUCTION	10,370
NAVAL COMPLEX CORPUS CHRISTI	TEXAS	100 UNITS REPLACEMENT	11,800
NAVAL SHIPYARD PORTSMOUTH	VIRGINIA	NEW CONSTRUCTION (SELF HELP/WAREHOUSE)	555
NAVAL STATION PUGET SOUND, EVERETT	WASHINGTON	NEW CONSTRUCTION (HSG OFFICE)	780
		CONSTRUCTION IMPROVEMENTS	155,602
		PLANNING	24,681
		FURNISHINGS ACCOUNT	38,663
		MANAGEMENT ACCOUNT	87,907
		MISCELLANEOUS ACCOUNT	1,217
		SERVICES ACCOUNT	62,593
		UTILITIES ACCOUNT	208,949
		LEASING	99,826
		MAINTENANCE OF REAL PROPERTY	438,359
		MORTGAGE INSURANCE PREMIUMS	85
TOTAL FAMILY HOUSING, NAVY			1,205,064
FAMILY HOUSING, AIR FORCE			
MAXWELL AFB	ALABAMA	FAMILY HOUSING (25 UNITS)	2,100
DAVIS-MONTHAN AFB	ARIZONA	FAMILY HOUSING (120 UNITS)	10,029
BEALE AFB	CALIFORNIA	FAMILY HOUSING (76 UNITS)	8,842
EDWARDS AFB	CALIFORNIA	FAMILY HOUSING (34 UNITS)	4,629
LOS ANGELES AFS	CALIFORNIA	FAMILY HOUSING (50 UNITS)	8,962
VANDENBERG AFB	CALIFORNIA	FAMILY HOUSING (128 UNITS)	16,460
BOLLING AFB	DISTRICT OF COLUMBIA	FAMILY HOUSING (100 UNITS)	9,000
PATRICK AFB	FLORIDA	FAMILY HOUSING (75 UNITS)	7,145
MOUNTAIN HOME AFB	IDAHO	FAMILY HOUSING (4 UNITS)	881

AUTHORIZED IN PRIOR YEAR

FY 1995 FAMILY HOUSING TOTAL OBLIGATIONAL AUTHORITY AS ENACTED

BY TYPE OF FACILITY
($ THOUSANDS)

DATA AS OF FEB 1995

INSTALLATION	LOCATION	PROJECT	TOTAL
FAMILY HOUSING, AIR FORCE			
MOUNTAIN HOME AFB	IDAHO	FAMILY HOUSING (60 UNITS)	5,712
SCOTT AFB	ILLINOIS	CARDINAL CREEK PHASE III	30,000
MCCONNELL AFB	KANSAS	FAMILY HOUSING (70 UNITS)	8,322
BARKSDALE AFB	LOUISIANA	FAMILY HOUSING (82 UNITS)	8,236
WHITEMAN AFB	MISSOURI	HOUSING OFFICE	567
CANNON AFB	NEW MEXICO	FAMILY HOUSING (1 UNIT)	230
HOLLOMAN AFB	NEW MEXICO	FAMILY HOUSING (76 UNITS)	7,733
KIRTLAND AFB	NEW MEXICO	FAMILY HOUSING (106 UNITS)	10,058
POPE AFB	NORTH CAROLINA	FAMILY HOUSING (120 UNITS)	14,874
SEYMOUR JOHNSON AFB	NORTH CAROLINA	FAMILY HOUSING (74 UNITS)	6,025
GRAND FORKS AFB	NORTH DAKOTA	HOUSING OFFICE	709
SHAW AFB	SOUTH CAROLINA	FAMILY HOUSING (3 UNITS)	631
DYESS AFB	TEXAS	FAMILY HOUSING (59 UNITS)	7,077
HILL AFB	UTAH	FAMILY HOUSING (138 UNITS)	11,400
LANGLEY AFB	VIRGINIA	FAMILY HOUSING (148 UNITS)	14,421
FAIRCHILD AFB	WASHINGTON	FAMILY HOUSING (6 UNITS)	1,035
F E WARREN AFB	WYOMING	FAMILY HOUSING (106 UNITS)	11,321
		CONSTRUCTION IMPROVEMENTS	61,770
		PLANNING	9,275
		FURNISHINGS ACCOUNT	42,852
		MANAGEMENT ACCOUNT	45,076
		MISCELLANEOUS ACCOUNT	5,794
		SERVICES ACCOUNT	32,724
		UTILITIES ACCOUNT	178,472
		LEASING	112,757
		MAINTENANCE OF REAL PROPERTY	407,144
		MORTGAGE INSURANCE PREMIUMS	26
TOTAL FAMILY HOUSING, AIR FORCE			1,102,289
FAMILY HOUSING, NATIONAL SECURITY AGENCY			
BELGIUM	BELGIUM	OFFICIAL RESIDENCE PURCHASE	300
		CONSTRUCTION IMPROVEMENTS	50
		FURNISHINGS ACCOUNT	75
		MANAGEMENT ACCOUNT	65
		MISCELLANEOUS ACCOUNT	31
		SERVICES ACCOUNT	341
		UTILITIES ACCOUNT	420
		LEASING	10,779
		MAINTENANCE OF REAL PROPERTY	222
TOTAL FAMILY HOUSING, NSA			12,283
FAMILY HOUSING, DEF INTELLIGENCE AGENCY			
		FURNISHINGS ACCOUNT	2,363
		LEASING	13,272
TOTAL FAMILY HOUSING, DIA			15,635
FAMILY HOUSING, DEFENSE LOGISTICS AGENCY			
		FURNISHINGS ACCOUNT	47
		MANAGEMENT ACCOUNT	158
		SERVICES ACCOUNT	50
		UTILITIES ACCOUNT	460
		MAINTENANCE OF REAL PROPERTY	748
TOTAL FAMILY HOUSING, DLA			1,463
GRAND TOTAL FAMILY HOUSING, DEFENSE AGENCIES			29,381

FY 1995 FAMILY HOUSING TOTAL OBLIGATIONAL AUTHORITY AS ENACTED

BY TYPE OF FACILITY
($ THOUSANDS)

DATA AS OF FEB 1995

INSTALLATION	LOCATION	PROJECT	TOTAL
HOMEOWNERS ASSISTINCE			
		PAYMENT TO HOMEOWNERS	10,640
		OTHER OPERATING COSTS	34,018
		ACQUISITION OF REAL PROPERTY	124,526
HOMEOWNERS ASSISTANCE			169,184
GRAND TOTAL FAMILY HOUSING			3,689,628
(MEMO-NON-ADD)			(9,700)

FY 1996 CONSTRUCTION ANNEX TOTAL OBLIGATIONAL AUTHORITY AS REQUESTED

TOTAL CONSTRUCTION ANNEX
BY TYPE OF FACILITY
($ THOUSANDS)

DATA AS OF FEB 1995

SUMMARY BY FACILITY	ARMY	NAVY	AIR FORCE	DEF. AGS.	TOTAL
OPERATIONAL FACILITIES	53,750	89,100	107,310	145,104	395,264
(MEMO-NON-ADD)			(586)		(586)
TRAINING FACILITIES	76,059	49,622	27,700	5,200	158,581
MAINTENANCE & PRODUCTION FACILITIES	40,990	66,818	82,589	100,943	291,340
R&D FACILITIES			23,200	134,150	157,350
AUTHORIZED IN PRIOR YEAR				(119,000)	(119,000)
SUPPLY FACILITIES	50,600	6,350	22,000	40,300	119,250
HOSPITAL AND MEDICAL FACILITIES				159,700	159,700
AUTHORIZED IN PRIOR YEAR				(100,000)	(100,000)
ADMINSTRATIVE FACILITIES		16,870	3,754	112,703	133,327
(MEMO-NON-ADD)			(263)		(263)
TROOP HOUSING FACILITIES	200,550	82,630	161,950		445,130
COMMUNITY FACILITIES		12,665	18,845	33,971	65,481
UTILITY FACILITIES	19,730	6,730	43,256	33,490	103,206
REAL ESTATE	17,000	3,170			20,170
(MEMO-NON-ADD)		(4,850)			(4,850)
AIR POLLUTION ABATEMENT			3,300		3,300
WATER POLLUTION ABATEMENT		107,420	58,986		166,406
(MEMO-NON-ADD)			(600)		(600)
UNSPECIFIED MINOR CONSTRUCTION	16,000	7,200	17,299	23,007	63,506
PLANNING & DESIGN	59,488	47,431	38,115	68,837	213,871
BASE REALIGNMENT & CLOSURE ACCT PART II				1,044,143	1,044,143
BASE REALIGNMENT & CLOSURE ACCT PART III				2,148,480	2,148,480
BASE REALIGNMENT & CLOSURE ACCT PART IV				784,569	784,569
NATO INFRASTRUCTURE				199,000	199,000
FAMILY HOUSING CONSTRUCTION	43,500	465,755	249,003	25,772	784,030
FAMILY HOUSING DEBT	11	82	29		122
FAMILY HOUSING OPERATIONS	1,337,585	1,048,247	849,184	30,467	3,265,483
HOMEOWNERS ASSISTANCE	238,478				238,478
*** TOTAL ***	2,153,741	2,010,090	1,706,520	5,089,836	10,960,187
(MEMO-NON-ADD)		(4,850)	(1,449)		(6,299)
AUTHORIZED IN PRIOR YEAR				(219,000)	(219,000)

FY 1996 CONSTRUCTION ANNEX TOTAL OBLIGATIONAL AUTHORITY AS REQUESTED

SUMMARY BY FACILITY	----TOTAL MILCON----- BY TYPE OF FACILITY ($ THOUSANDS) ARMY	NAVY	AIR FORCE	DATA AS OF FEB 1995 DEF. AGS.	TOTAL
OPERATIONAL FACILITIES	53,750	89,100	107,310	145,104	395,264
(MEMO-NON-ADD)			(586)		(586)
TRAINING FACILITIES	76,059	49,622	27,700	5,200	158,581
MAINTENANCE & PRODUCTION FACILITIES	40,990	66,818	82,589	100,943	291,340
R&D FACILITIES			23,200	134,150	157,350
AUTHORIZED IN PRIOR YEAR				(119,000)	(119,000)
SUPPLY FACILITIES	50,600	6,350	22,000	40,300	119,250
HOSPITAL AND MEDICAL FACILITIES				159,700	159,700
AUTHORIZED IN PRIOR YEAR				(100,000)	(100,000)
ADMINSTRATIVE FACILITIES		16,870	3,754	112,703	133,327
(MEMO-NON-ADD)			(263)		(263)
TROOP HOUSING FACILITIES	200,550	82,630	161,950		445,130
COMMUNITY FACILITIES		12,665	18,845	33,971	65,481
UTILITY FACILITIES	19,730	6,730	43,256	33,490	103,206
REAL ESTATE	17,000	3,170			20,170
(MEMO-NON-ADD)		(4,850)			(4,850)
AIR POLLUTION ABATEMENT			3,300		3,300
WATER POLLUTION ABATEMENT		107,420	58,986		166,406
(MEMO-NON-ADD)			(600)		(600)
UNSPECIFIED MINOR CONSTRUCTION	16,000	7,200	17,299	23,007	63,506
PLANNING & DESIGN	59,488	47,431	38,115	68,837	213,871
BASE REALIGNMENT & CLOSURE ACCT PART II				1,044,143	1,044,143
BASE REALIGNMENT & CLOSURE ACCT PART III				2,148,480	2,148,480
BASE REALIGNMENT & CLOSURE ACCT PART IV				784,569	784,569
NATO INFRASTRUCTURE				199,000	199,000
*** TOTAL ***	534,167	496,006	608,304	5,033,597	6,672,074
(MEMO-NON-ADD)		(4,850)	(1,449)		(6,299)
AUTHORIZED IN PRIOR YEAR				(219,000)	(219,000)

FY 1996 CONSTRUCTION ANNEX TOTAL OBLIGATIONAL AUTHORITY AS REQUESTED

SUMMARY BY FACILITY	----ACTIVE FORCES---- BY TYPE OF FACILITY ($ THOUSANDS) ARMY	NAVY	AIR FORCE	DATA AS OF FEB 1995 DEF. AGS.	TOTAL
OPERATIONAL FACILITIES	53,750	89,100	94,140	145,104	382,094
(MEMO-NON-ADD)			(586)		(586)
TRAINING FACILITIES	32,400	44,676	18,300	5,200	100,576
MAINTENANCE & PRODUCTION FACILITIES	36,800	66,818	35,124	100,943	239,685
R&D FACILITIES			23,200	134,150	157,350
AUTHORIZED IN PRIOR YEAR				(119,000)	(119,000)
SUPPLY FACILITIES	50,600	6,350	18,000	40,300	115,250
HOSPITAL AND MEDICAL FACILITIES				159,700	159,700
AUTHORIZED IN PRIOR YEAR				(100,000)	(100,000)
ADMINSTRATIVE FACILITIES		16,870	3,244	112,703	132,817
(MEMO-NON-ADD)			(263)		(263)
TROOP HOUSING FACILITIES	200,550	82,630	157,550		440,730
COMMUNITY FACILITIES		12,665	14,350	33,971	60,986
UTILITY FACILITIES	19,730	6,730	29,596	33,490	89,546
REAL ESTATE	17,000	3,170			20,170
(MEMO-NON-ADD)		(4,850)			(4,850)
AIR POLLUTION ABATEMENT			3,300		3,300
WATER POLLUTION ABATEMENT		107,420	58,986		166,406
(MEMO-NON-ADD)			(600)		(600)
UNSPECIFIED MINOR CONSTRUCTION	9,000	7,200	9,030	23,007	48,237
PLANNING & DESIGN	52,894	44,457	30,835	68,837	197,023
BASE REALIGNMENT & CLOSURE ACCT PART II				1,044,143	1,044,143
BASE REALIGNMENT & CLOSURE ACCT PART III				2,148,480	2,148,480
BASE REALIGNMENT & CLOSURE ACCT PART IV				784,569	784,569
NATO INFRASTRUCTURE				199,000	199,000
*** TOTAL ***	472,724	488,086	495,655	5,033,597	6,490,062
(MEMO-NON-ADD)		(4,850)	(1,449)		(6,299)
AUTHORIZED IN PRIOR YEAR				(219,000)	(219,000)

FY 1996 CONSTRUCTION ANNEX TOTAL OBLIGATIONAL AUTHORITY AS REQUESTED

NATIONAL GUARD FORCES
BY TYPE OF FACILITY
($ THOUSANDS)

DATA AS OF FEB 1995

SUMMARY BY FACILITY	ARMY	NAVY	AIR FORCE	DEF. AGS.	TOTAL
OPERATIONAL FACILITIES			9,820		9,820
TRAINING FACILITIES	6,090		6,350		12,440
MAINTENANCE & PRODUCTION FACILITIES	4,190		38,962		43,152
SUPPLY FACILITIES			4,000		4,000
ADMINSTRATIVE FACILITIES			510		510
TROOP HOUSING FACILITIES			4,400		4,400
COMMUNITY FACILITIES			4,495		4,495
UTILITY FACILITIES			8,430		8,430
UNSPECIFIED MINOR CONSTRUCTION	5,300		4,100		9,400
PLANNING & DESIGN	2,900		4,580		7,480
*** TOTAL ***	18,480		85,647		104,127

FY 1996 CONSTRUCTION ANNEX TOTAL OBLIGATIONAL AUTHORITY AS REQUESTED

SUMMARY BY FACILITY	---RESERVE FORCES---- BY TYPE OF FACILITY ($ THOUSANDS) ARMY	NAVY	AIR FORCE	DATA AS OF FEB 1995 TOTAL
OPERATIONAL FACILITIES			3,350	3,350
TRAINING FACILITIES	37,569	4,946	3,050	45,565
MAINTENANCE & PRODUCTION FACILITIES			8,503	8,503
UTILITY FACILITIES			5,230	5,230
UNSPECIFIED MINOR CONSTRUCTION	1,700		4,169	5,869
PLANNING & DESIGN	3,694	2,974	2,700	9,368
*** TOTAL ***	42,963	7,920	27,002	77,885

FY 1996 CONSTRUCTION ANNEX TOTAL OBLIGATIONAL AUTHORITY AS REQUESTED

TOT GUARD AND RESERVE
BY TYPE OF FACILITY
($ THOUSANDS)

DATA AS OF FEB 1995

SUMMARY BY FACILITY	ARMY	NAVY	AIR FORCE		TOTAL
OPERATIONAL FACILITIES			13,170		13,170
TRAINING FACILITIES	43,659	4,946	9,400		58,005
MAINTENANCE & PRODUCTION FACILITIES	4,190		47,465		51,655
SUPPLY FACILITIES			4,000		4,000
ADMINSTRATIVE FACILITIES			510		510
TROOP HOUSING FACILITIES			4,400		4,400
COMMUNITY FACILITIES			4,495		4,495
UTILITY FACILITIES			13,660		13,660
UNSPECIFIED MINOR CONSTRUCTION	7,000		8,269		15,269
PLANNING & DESIGN	6,594	2,974	7,280		16,848
*** TOTAL ***	61,443	7,920	112,649		182,012

FY 1996 CONSTRUCTION ANNEX TOTAL OBLIGATIONAL AUTHORITY AS REQUESTED

---FAMILY HOUSING---

($ THOUSANDS) DATA AS OF FEB 1995

SUMMARY BY FACILITY	ARMY	NAVY	AIR FORCE	DEF. AGS.	TOTAL
FAMILY HOUSING CONSTRUCTION	43,500	465,755	249,003	25,772	784,030
FAMILY HOUSING DEBT	11	82	29		122
FAMILY HOUSING OPERATIONS	1,337,585	1,048,247	849,184	30,467	3,265,483
HOMEOWNERS ASSISTANCE	238,478				238,478
*** TOTAL ***	1,619,574	1,514,084	1,098,216	56,239	4,288,113

FY 1996 MILITARY CONSTRUCTION TOTAL OBLIGATIONAL AUTHORITY AS REQUESTED

ACTIVE GUARD AND RESERVE FORCES
BY TYPE OF FACILITY
($ THOUSANDS)

DATA AS OF FEB 1995

INSTALLATION	LOCATION	PROJECT	TOTAL
OPERATIONAL FACILITIES			
ARMY			
FORT GORDON	GEORGIA	BATTALION HEADQUARTERS	3,150
FT STEWART/HUNTER AAF	GEORGIA	DEPLOYMENT STAGING AREA	8,400
FORT BRAGG	NORTH CAROLINA	STAGING AREA COMPLEX	11,200
CHARLESTON NAVAL WEAPONS STATION	SOUTH CAROLINA	ARMY STRATEGIC MAINT COMPLEX PH II (DBOF)	16,500
CHARLESTON NAVAL WEAPONS STATION	SOUTH CAROLINA	WHARF ADDITIONS (DBOF)	9,200
FORT LEWIS	WASHINGTON	CONSOLIDATED FUEL STATION	3,400
CLASSIFIED LOCATIONS	CONUS CLASSIFIED	CLASSIFIED PROJECT	1,900
**ARMY			53,750
NAVY			
NORTH ISLAND NAVAL AIR STATION	CALIFORNIA	BERTHING WHARF	58,670
KINGS BAY STRATEGIC WEAPONS FAC, ATLANTIC	GEORGIA	SECURITY FORCE FACILITY	2,450
HONOLULU COMP&TELCOMM AREA MASTER STA EPAC	HAWAII	FIRE PROTECTION SYSTEM	1,980
PEARL HARBOR INTELLIGENCE CENTER PACIFIC	HAWAII	OPERATIONS BUILDING ALTERATIONS	2,200
PEARL HARBOR NAVAL SUBMARINE BASE	HAWAII	BERTHING PIER	22,500
YORKTOWN NAVAL WEAPONS STATION	VIRGINIA	EXPLOSIVE ORDNANCE DISPOSAL OPS FAC(DBOF)	1,300
**NAVY			89,100
AIR FORCE			
ELMENDORF AFB	ALASKA	MILSTAR COMMUNICATIONS GROUND TERMINAL	850
ELMENDORF AFB	ALASKA	REPAIR AIRFIELD TAXIWAY	900
TRAVIS AFB	CALIFORNIA	SQUADRON OPERATIONS/AIRCRAFT MAINTENANCE U	7,400
VANDENBERG AFB	CALIFORNIA	FIRE STATION	2,000
VANDENBERG AFB	CALIFORNIA	SLFI - CHEMICAL TEST AND ANALYSIS LABORATO	4,000
PETERSON AFB	COLORADO	FIRE STATION	1,390
DOVER AFB	DELAWARE	C-5 SQD OPERATIONS/ACFT MAINT (DBOF)	5,500
EGLIN AFB	FLORIDA	REPAIR RUNWAY	6,200
MOODY AFB	GEORGIA	C-130 AERIAL DELIVERY FACILITY	4,600
MOODY AFB	GEORGIA	C-130 SQUADRON OPERATIONS/ AIRCRAFT MAINTE	3,200
MOODY AFB	GEORGIA	CONTROL TOWER	2,700
HICKAM AFB	HAWAII	REPAIR AIRFIELD PAVEMENTS	4,550
MCCONNELL AFB	KANSAS	KC-135 SQUADRON OPERATIONS/ACFT MAINTEN.	6,100
WHITEMAN AFB	MISSOURI	B-2 ADD TO ACFT APRON/CONVOY ROAD/TAXIWAY	1,500
MCGUIRE AFB	NEW JERSEY	KC-10 SQUADRON OPERATIONS/ AIRCRAFT MAINTE	7,600
POPE AFB	NORTH CAROLINA	C-130 SQUADRON OPS/AMU AND AUDIOVISUAL SER	6,100
GRAND FORKS AFB	NORTH DAKOTA	KC-135 SQUADRON OPERATIONS/ACFT MAINTEN.	6,300
CHARLESTON AFB	SOUTH CAROLINA	C-17 SQUADRON OPERATIONS/ AIRCRAFT MAINTEN	5,600
BROOKS AFB	TEXAS	ADD TO AND ALTER COMMUNICATIONS FACILITY (MEMO-NON-ADD)	(233)
KELLY AFB	TEXAS	COMMUNICATIONS FACILITY (MEMO-NON-ADD)	(353)
RANDOLPH AFB	TEXAS	UPGRADE AIRFIELD LIGHTING	1,900
SHEPPARD AFB	TEXAS	UPGRADE AIRFIELD LIGHTING	1,500
MCCHORD AFB	WASHINGTON	SQUADRON OPERATIONS/ AIRCRAFT MAINTENANCE	5,600
CLASSIFIED LOCATION	CONUS CLASSIFIED	SPECIAL TACTICAL UNIT DETACHMENT FACILITY	700
AVIANO AB	ITALY	SQUADRON OPERATIONS FACILITY	950
ANKARA	TURKEY	LONG PERIOD SEISIC ARRAY	3,000
ANKARA	TURKEY	SHORT PERIOD SEISMIC ARRAY	4,000
**AIR FORCE			94,140
(MEMO-NON-ADD)			(586)
SPECIAL OPERATIONS COMMAND			
DUKE FIELD	FLORIDA	SQ OPERATIONS/AMU	2,400
EGLIN AUX FIELD 9	FLORIDA	SOF SQUADRON OPS/AMU MH-53	7,100
FORT BRAGG	NORTH CAROLINA	GROUP HEADQUARTERS BLDG	2,600
DAM NECK	VIRGINIA	NSWG-2 HEADQUARTERS, LITTLE CREEK	6,100

FY 1996 MILITARY CONSTRUCTION TOTAL OBLIGATIONAL AUTHORITY AS REQUESTED

ACTIVE GUARD AND RESERVE FORCES
BY TYPE OF FACILITY
($ THOUSANDS)

DATA AS OF FEB 1995

INSTALLATION	LOCATION	PROJECT	TOTAL
OPERATIONAL FACILITIES			
SPECIAL OPERATIONS COMMAND			
NAVAL AMPHIBIOUS BASE, LITTLE CREEK	VIRGINIA	AMPHIB OPS SUPPORT BLDG (DAM NECK)	4,500
NS GUAM	GUAM	SEAL TEAM DET BUILDING, GUAM	8,800
**SPECIAL OPERATIONS COMMAND			31,500
DEFENSE LEVEL ACTIVITIES			
UNSPECIFIED WORLDWIDE LOCATIONS	WORLDWIDE UNSPECIFIED	ENERGY CONSERVATION IMPROVEMENT PROGRAM	50,000
**DEFENSE LEVEL ACTIVITIES			50,000
NATIONAL SECURITY AGENCY			
FORT MEADE	MARYLAND	FANX II PURCHASE	14,800
**NATIONAL SECURITY AGENCY			14,800
DEFENSE LOGISTICS AGENCY			
DFSC POINT MUGU	CALIFORNIA	FUEL STORAGE (DBOF)	750
DFSC DOVER AFB	DELAWARE	REPLACE HYDRANT FUEL SYSTEM (DBOF)	15,554
DFSC BARKSDALE AFB	LOUISIANA	REPLACE HYDRANT FUEL SYSTEM (DBOF)	13,100
DFSC MCGUIRE AFB	NEW JERSEY	REPLACE HYDRANT FUEL SYSTEM (DBOF)	12,000
DFSC ROTA	SPAIN	HYDRANT FUEL SYSTEM (DBOF)	7,400
**DEFENSE LOGISTICS AGENCY			48,804
AIR NATIONAL GUARD			
SEPULVEDA ANG ANNEX	CALIFORNIA	REPLACE UNDERGROUND FUEL STORAGE TANKS	320
GLYNNCO AIR NATIONAL GUARD STATION	GEORGIA	REPLACE UNDERGROUND FUEL STORAGE TANKS	320
HUNTER ANG SITE	GEORGIA	REPLACE UNDERGROUND FUEL STORAGE TANKS	400
GOWEN FIELD	IDAHO	REMOVE UNDERGROUND FUEL STORAGE TANKS	320
GREATER PEORIA AIRPORT	ILLINOIS	ADD TO AIRCRAFT PARKING APRON	630
GREATER PEORIA AIRPORT	ILLINOIS	ADD TO AND ALTER SQUADRON OPERS FACILITY	970
GREATER PEORIA AIRPORT	ILLINOIS	AIRCRAFT DEICING FACILITY	400
MCCONNELL AFB	KANSAS	ALTER B-1 SQUADRON OPERATIONS FACILITY	800
MINN-ST PAUL IAP	MINNESOTA	AIRCRAFT DEICING FACILITY	400
NIAGARA FALLS IAP	NEW YORK	UPGRADE RUNWAY OVERRUN	1,950
BLUE ASH ANG STATION	OHIO	REPLACE UNDERGROUND FUEL STORAGE TANKS	380
CAMP PERRY	OHIO	REPLACE UNDERGROUND FUEL STORAGE TANKS	320
RICKENBACKER ANGB	OHIO	REPLACE UNDERGROUND FUEL STORAGE TANKS	310
TULSA IAP	OKLAHOMA	COMPOSITE COMMUNICATIONS FACILITY	1,900
WILL ROGERS WORLD AIRPORT	OKLAHOMA	PETROLEUM OPERATIONS FACILITY	400
**AIR NATIONAL GUARD			9,820
AIR FORCE RESERVE			
YOUNGSTOWN MAP	OHIO	CONSTRUCT AIRCRAFT PARKING APRON	3,350
**AIR FORCE RESERVE			3,350
** OPERATIONAL FACILITIES			395,264
(MEMO-NON-ADD)			(586)
TRAINING FACILITIES			
ARMY			
FORT LESLEY J MCNAIR	DISTRICT OF COLUMBIA	NATIONAL DEFENSE UNIVERSITY FACILITY	8,000
FORT BENNING	GEORGIA	CLOSE COMBAT TACTICAL TRAINER BUILDING	4,900
FORT KNOX	KENTUCKY	CLOSE COMBAT TACTICAL TRAINER BUILDING	5,600
FORT EUSTIS	VIRGINIA	DEPLOYMENT TRAINING FACILITY	5,400
FORT LEWIS	WASHINGTON	MULTI-PURPOSE TRAINING RANGE-YAKIMA	8,500
**ARMY			32,400

FY 1996 MILITARY CONSTRUCTION TOTAL OBLIGATIONAL AUTHORITY AS REQUESTED

ACTIVE GUARD AND RESERVE FORCES
BY TYPE OF FACILITY
($ THOUSANDS)

DATA AS OF FEB 1995

INSTALLATION	LOCATION	PROJECT	TOTAL
TRAINING FACILITIES			
NAVY			
CAMP PENDLETON MARINE CORPS BASE	CALIFORNIA	MULTI-PURPOSE MG RANGE	3,800
CAMP PENDLETON MARINE CORPS BASE	CALIFORNIA	SENSITIVE COMPARTMENTED INFO FACILITY ADD	2,246
TWENTYNINE PALMS MARCORP AIR-GRND COMB CTR	CALIFORNIA	INFANTRY SQUAD BATTLE COURSE	2,490
EGLIN AFB NAVSCH EXPL ORDNANCE DISP DET	FLORIDA	EXPLOSIVE ORDNANCE DISPOSAL TRNG COMPLEX	14,200
EGLIN AFB NAVSCH EXPL ORDNANCE DISP DET	FLORIDA	UNDERWATER ORDNANCE DISPOSAL TRNG FAC	1,950
GREAT LAKES NAVAL TRAINING CENTER	ILLINOIS	UNIFORM ISSUE BUILDING	12,440
CAMP LEJEUNE MARINE CORPS BASE	NORTH CAROLINA	INFANTRY PLATOON BATTLE COURSE	5,500
CHERRY POINT MARINE CORPS AIR STATION	NORTH CAROLINA	ENCLOSE WATER SURVIVAL TRAINING TANK	2,050
**NAVY			44,676
AIR FORCE			
TRAVIS AFB	CALIFORNIA	KC-10 ADD TO FLIGHT SIMULATOR FACILITY	2,400
MOUNTAIN HOME AFB	IDAHO	IDAHO TRAINING RANGE (NORTH SITE)	8,000
BARKSDALE AFB	LOUISIANA	B-52 TRAINING COMPLEX	2,500
WHITEMAN AFB	MISSOURI	B-2 ADD TO FLIGHT SIMULATOR TRAINING FACIL	4,100
CHARLESTON AFB	SOUTH CAROLINA	C-17 ADD TO FLIGHT SIMULATOR FACILITY	1,300
**AIR FORCE			18,300
SPECIAL OPERATIONS COMMAND			
NAVAL AIR STATION MIRAMAR	CALIFORNIA	TRAINING COURSE COMPLEX	5,200
**SPECIAL OPERATIONS COMMAND			5,200
ARMY NATIONAL GUARD			
MARSEILLES	ILLINOIS	TRNG SITE, UTIL UPGRADE	1,350
FORT LEAVENWORTH	KANSAS	CORPS SIM CENTER, PH II	4,400
CAMP WILLIAMS	UTAH	TRNG SITE, STORAGE FAC	340
**ARMY NATIONAL GUARD			6,090
AIR NATIONAL GUARD			
GREATER PEORIA AIRPORT	ILLINOIS	ALTER AERIAL PORT TRAINING FACILITY	710
WARREN GROVE RANGE	NEW JERSEY	COMPOSITE RANGE OPERATIONS FACILITY	1,100
HANCOCK FIELD	NEW YORK	COMPOSITE MEDICAL TRAINING FACILITY	1,990
WILL ROGERS WORLD AIRPORT	OKLAHOMA	AERIAL PORT TRAINING FACILITY	2,550
**AIR NATIONAL GUARD			6,350
ARMY RESERVE			
JASPER	ALABAMA	ADD/ALT TO USARC/OMS/AMSA	2,500
FORT WAINWRIGHT	ALASKA	USARC/OMS/STORAGE	4,779
CAMP PARKS	CALIFORNIA	BATTLE PROJECTION CENTER	5,868
ARLINGTON HEIGHTS	ILLINOIS	BATTLE PROJECTION CENTER	4,860
FORT SHERIDAN	ILLINOIS	ADD/ALT RTS-INTELL	3,300
OLATHE	KANSAS	LAND ACQUISITION	539
TOPEKA	KANSAS	USARC/OMS/AMSA	6,487
HICKORY	NORTH CAROLINA	USARC	2,713
GREEN BAY	WISCONSIN	USARC/OMS/AMSA	6,523
**ARMY RESERVE			37,569
NAVY RESERVE			
MCRC CAMP EDWARDS	MASSACHUSETTS	RESCEN/COMBAT VEH. MAINT. FAC. ADDN.	2,120
NAVMARCORESCEN BUFFALO	NEW YORK	RESCEN/MIUW ADDITION	2,826
**NAVY RESERVE			4,946
AIR FORCE RESERVE			
MARCH AFB	CALIFORNIA	FIRE TRAINING FACILITY	1,550

FY 1996 MILITARY CONSTRUCTION TOTAL OBLIGATIONAL AUTHORITY AS REQUESTED

ACTIVE GUARD AND RESERVE FORCES
BY TYPE OF FACILITY
($ THOUSANDS)

DATA AS OF FEB 1995

INSTALLATION	LOCATION	PROJECT	TOTAL
TRAINING FACILITIES			
AIR FORCE RESERVE			
GRISSOM AFB	INDIANA	FIRE TRAINING FACILITY	1,500
**AIR FORCE RESERVE			3,050
** TRAINING FACILITIES			158,581
MAINTENANCE & PRODUCTION FACILITIES			
ARMY			
FT IRWIN	CALIFORNIA	CONSOLIDATED MAINTENANCE FACILITY	15,500
FORT SILL	OKLAHOMA	CENTRAL VEHICLE WASH FACILITY	6,300
FORT LEWIS	WASHINGTON	TACTICAL EQUIPMENT SHOP	15,000
**ARMY			36,800
NAVY			
CAMP PENDLETON MARINE CORPS BASE	CALIFORNIA	TACTICAL VEHICLE MAINTENANCE FACILITY	1,088
LEMOORE NAVAL AIR STATION	CALIFORNIA	JET ENGINE TEST CELL	7,600
NORTH ISLAND NAVAL AIR STATION	CALIFORNIA	CONTROLLED INDUSTRIAL FACILITY	42,500
CHERRY POINT MARINE CORPS AIR STATION	NORTH CAROLINA	JET ENGINE TEST CELL	7,730
BREMERTON PUGET SOUND NAVAL SHIPYARD	WASHINGTON	METAL PREPARATION FAC IMPROVEMENTS (DBOF)	2,600
KEYPORT NAVAL UNDERSEA WARFARE CENTER DIV	WASHINGTON	METAL TREATMENT FACILITY (DBOF)	5,300
**NAVY			66,818
AIR FORCE			
US AIR FORCE ACADEMY	COLORADO	SAILPLANE HANGAR	3,724
MOODY AFB	GEORGIA	C-130 AIRCRAFT WASHRACK FACILITY	1,700
ROBINS AFB	GEORGIA	JSTARS AIRCRAFT FUEL SYSTEM MAINTENANCE DO	6,900
WHITEMAN AFB	MISSOURI	B-2 AIRCRAFT MAINTENANCE DOCKS/HYDRANT FUE	15,500
SPANGDAHLEM AB	GERMANY	ADD TO MISSILE MAINTENANCE FACILITY	930
SPANGDAHLEM AB	GERMANY	SOUND SUPPRESSOR FOUNDATION	600
SPANGDAHLEM AB	GERMANY	SOUND SUPPRESSOR FOUNDATION	950
AVIANO AB	ITALY	COMMUNICATIONS MAINTENANCE FACILITY	1,400
RAF LAKENHEATH	UNITED KINGDOM	ADD TO MISSILE MAINTENANCE FACILITY	1,820
OVERSEAS CLASSIFIED	OVERSEAS CLASSIFIED	VEHICLE MAINTENANCE FACILITY	1,600
**AIR FORCE			35,124
ARMY BUDGETED BY DOD			
PINE BLUFF ARSENAL	ARKANSAS	AMMUNITION DEMILITARIZATION FAC PHASE II	40,000
UMATILLA DEPOT	OREGON	AMMUNITION DEMILITARIZATION FAC PHASE II	55,000
**ARMY BUDGETED BY DOD			95,000
SPECIAL OPERATIONS COMMAND			
EGLIN AUX FIELD 9	FLORIDA	SOF HELICOPTER HANGAR (2)	5,500
OLMSTEAD FIELD, HARRISBURG IAP	PENNSYLVANIA	REFUELING VEHICLE SHOP	443
**SPECIAL OPERATIONS COMMAND			5,943
ARMY NATIONAL GUARD			
GULFPORT	MISSISSIPPI	AVCRAD EETF	1,100
LAWTON (FORT SILL)	OKLAHOMA	OMS/MLRS PH I	2,400
CODY	WYOMING	OMSS	342
NEWCASTLE	WYOMING	OMSS	348
**ARMY NATIONAL GUARD			4,190
AIR NATIONAL GUARD			
BIRMINGHAM MAP	ALABAMA	ALTER KC-135 AIRCRAFT SHOPS	4,400

FY 1996 MILITARY CONSTRUCTION TOTAL OBLIGATIONAL AUTHORITY AS REQUESTED

ACTIVE GUARD AND RESERVE FORCES
BY TYPE OF FACILITY
($ THOUSANDS)

DATA AS OF FEB 1995

INSTALLATION	LOCATION	PROJECT	TOTAL
MAINTENANCE & PRODUCTION FACILITIES			
AIR NATIONAL GUARD			
TUCSON IAP	ARIZONA	ADD TO & ALTER AIRCRAFT SPT EQUIP SHOP	600
BUCKLEY ANGB	COLORADO	BASE ENGINEER PAVEMENTS & GROUNDS FACILIT	450
SAVANNAH MAP	GEORGIA	ALTER AIRCRAFT MAINTENANCE SHOPS	1,300
GREATER PEORIA AIRPORT	ILLINOIS	ADD TO AIRCRAFT MAINTENANCE HANGAR	1,200
GREATER PEORIA AIRPORT	ILLINOIS	ALTER AIRCRAFT MAINTENANCE SHOPS	1,450
BARNES MAP	MASSACHUSETTS	VEHICLE MAINTENANCE COMPLEX	2,000
WORCESTER ANGS	MASSACHUSETTS	PAINT AND REFUELING VEHICLES MAINT BAYS	350
MCGUIRE AFB	NEW JERSEY	FUEL CELL AND CORROSION CONTROL FACILITY	5,700
KIRTLAND AFB	NEW MEXICO	AIRCRAFT CORROSION CONTROL FACILITY	1,800
KIRTLAND AFB	NEW MEXICO	ALTER AIRCRAFT MAINT HANGAR AND SHOPS	900
KIRTLAND AFB	NEW MEXICO	COMPOSITE ENGINE AND NDI SHOP	2,700
KIRTLAND AFB	NEW MEXICO	LANTIRN MAINTENANCE FACILITY	620
GREATER PITTSBURGH IAP	PENNSYLVANIA	FUEL SYSTEMS MAINTENANCE FACILITY	5,332
MEMPHIS IAP	TENNESSEE	ADD TO & ALTER BASE ENGINEER MAINT CMPLX	990
CAMP PENDLETON ANGB	VIRGINIA	VEHICLE MAINTENANCE COMPLEX	2,000
RICHARD E BYRD IAP	VIRGINIA	ADD TO AND ALTER F-16 AC MAINT COMPLEX	2,700
TRUAX FIELD	WISCONSIN	ALTER MUNITIONS FACILITY	670
PUERTO RICO IAP	PUERTO RICO	MUNITIONS MAINT & STORAGE COMPLEX	3,800
**AIR NATIONAL GUARD			38,962
AIR FORCE RESERVE			
MAXWELL AFB	ALABAMA	COMPOSITE MAINTENANCE SHOPS	3,608
NIAGARA FALLS IAP	NEW YORK	FUEL SYSTEM MAINTENANCE HANGAR	4,895
**AIR FORCE RESERVE			8,503
** MAINTENANCE & PRODUCTION FACILITIES			291,340
R&D FACILITIES			
AIR FORCE			
EDWARDS AFB	CALIFORNIA	ADD TO AND ALTER ANECHOIC CHAMBER	11,100
EDWARDS AFB	CALIFORNIA	F-22 ADD TO AND ALTER ENGINEERING TEST FAC	12,100
**AIR FORCE			23,200
BALLISTIC MISSILE DEFENSE ORAGNIZATION			
FORT BLISS	TEXAS	THAAD 1ST OBSV BN OTM FACILITIES	13,600
**BALLISTIC MISSILE DEFENSE ORAGNIZATION			13,600
DEFENSE MEDICAL SUPPORT ACTIVITY			
FOREST GLEN (WRAIR)	MARYLAND	ARMED FORCES INST OF PATH REPOSITORY ADD	1,550
FOREST GLEN (WRAIR)	MARYLAND	#ARMY INSTITUTE OF RESEARCH PHASE III	119,000
**DEFENSE MEDICAL SUPPORT ACTIVITY			120,550
AUTHORIZED IN PRIOR YEAR			(119,000)
** R&D FACILITIES			157,350
AUTHORIZED IN PRIOR YEAR			(119,000)
SUPPLY FACILITIES			
ARMY			
FORT GORDON	GEORGIA	GENERAL PURPOSE WAREHOUSE	2,600
VARIOUS LOCATIONS	OVERSEAS VARIOUS	STRATEGIC LOGISTICAL PREPO COMPLEX PH I	48,000
**ARMY			50,600

AUTHORIZED IN PRIOR YEAR

FY 1996 MILITARY CONSTRUCTION TOTAL OBLIGATIONAL AUTHORITY AS REQUESTED

ACTIVE GUARD AND RESERVE FORCES
BY TYPE OF FACILITY
($ THOUSANDS)

DATA AS OF FEB 1995

INSTALLATION	LOCATION	PROJECT	TOTAL
SUPPLY FACILITIES			
NAVY			
CHERRY POINT MARINE CORPS AIR STATION	NORTH CAROLINA	MISSILE MAGAZINE	1,650
QUANTICO MARINE CORPS COMBAT DEV COMMAND	VIRGINIA	AMMUNITION STORAGE FACILITY	3,500
CONUS VARIOUS	CONUS VARIOUS	SUPPLY WAREHSE	1,200
**NAVY			6,350
AIR FORCE			
TIN CITY	ALASKA	ABOVE GROUND FUEL TANKS	2,500
OVERSEAS CLASSIFIED	OVERSEAS CLASSIFIED	WAR READINESS MATERIAL WAREHOUSES	15,500
**AIR FORCE			18,000
SPECIAL OPERATIONS COMMAND			
EGLIN AUX FIELD 9	FLORIDA	BENSON TANK STORAGE/MX FACILITY	1,550
OLMSTEAD FIELD, HARRISBURG IAP	PENNSYLVANIA	SOF MOBILITY STORAGE WAREHOUSE	1,200
**SPECIAL OPERATIONS COMMAND			2,750
DEFENSE LOGISTICS AGENCY			
DEF DISTRIBUTION ANNISTON - DDAA	ALABAMA	VEHICLE STORAGE SHELTER (DBOF)	3,550
DEF DISTRIBUTION STOCKTON - DDJC	CALIFORNIA	GENERAL PURPOSE WHSE REPLACEMENT (DBOF)	15,000
DFSC EGLIN AFB	FLORIDA	SOF FUEL STORAGE (DBOF)	2,400
DEFENSE DISTRIBUTION DEPOT - DDNV	VIRGINIA	GENERAL PURPOSE WHSE REPLACEMENT (DBOF)	10,400
DEFENSE FUEL SUPPORT POINT ROOSEVELT ROADS	PUERTO RICO	FUEL STORAGE (DBOF)	6,200
**DEFENSE LOGISTICS AGENCY			37,550
AIR NATIONAL GUARD			
JOE FOSS FIELD	SOUTH DAKOTA	BASE SUPPLY COMPLEX	4,000
**AIR NATIONAL GUARD			4,000
** SUPPLY FACILITIES			119,250
HOSPITAL AND MEDICAL FACILITIES			
DEFENSE MEDICAL SUPPORT ACTIVITY			
ELMENDORF AIR FORCE BASE	ALASKA	#HOSPITAL REPLACEMENT PHASE IV	28,100
LUKE AIR FORCE BASE	ARIZONA	HOSPITAL ADD/ALT LIFE SAFETY UPGRADE	8,100
CAMP PENDLETON MARINE CORPS BASE	CALIFORNIA	ENVIRONMENTAL HEALTH/INDUSTIAL HYGIENE	1,700
FORT IRWIN	CALIFORNIA	AMBULATORY HEALTHCARE CLINIC	6,900
VANDENBERG AIR FORCE BASE	CALIFORNIA	LIFE SAFETY/SEISMIC/UTILITY UPGRADE	5,700
DOVER AIR FORCE BASE	DELAWARE	LIFE SAFETY UPGRADE	4,400
FORT BENNING	GEORGIA	LIFE SAFETY UPGRADE	5,600
BARKSDALE AIR FORCE BASE	LOUISIANA	LIFE SAFETY UPGRADE	4,100
BETHESDA NAVAL HOSPITAL	MARYLAND	POTABLE WATER LINE REPLACEMENT	1,300
FORT HOOD	TEXAS	CONSOLIDATED TROOP MEDICAL CLINIC	5,500
LACKLAND AIR FORCE BASE	TEXAS	EMERGENCY DEPARTMENT ADDITION/ALTERATION	6,100
REESE AIR FORCE BASE	TEXAS	LIFE SAFETY/UTILITY UPGRADE	1,000
NORTHWEST NAVAL SECURITY GROUP ACTIVITY	VIRGINIA	MEDICAL/DENTAL CLINIC	4,300
PORTSMOUTH NAVAL HOSPITAL	VIRGINIA	#HOSPITAL REPLACEMENT PHASE VII	71,900
U.S. NAVAL SUPPORT ACTIVITY, NAPLES	ITALY	DISPENSARY (CAPODICHINO)	5,000
**DEFENSE MEDICAL SUPPORT ACTIVITY			159,700
AUTHORIZED IN PRIOR YEAR			(100,000)
ADMINSTRATIVE FACILITIES			
NAVY			
BREMERTON PUGET SOUND NAVAL SHIPYARD	WASHINGTON	FLEET SUPPORT FACILITIES (DBOF)	6,870

AUTHORIZED IN PRIOR YEAR

FY 1996 MILITARY CONSTRUCTION TOTAL OBLIGATIONAL AUTHORITY AS REQUESTED

ACTIVE GUARD AND RESERVE FORCES
BY TYPE OF FACILITY
($ THOUSANDS)

DATA AS OF FEB 1995

INSTALLATION	LOCATION	PROJECT	TOTAL
ADMINSTRATIVE FACILITIES			
NAVY			
NAPLES NAVAL SUPPORT ACTIVITY	ITALY	OPERATIONS SUPPORT CENTER	10,000
**NAVY			16,870
AIR FORCE			
KELLY AFB	TEXAS	WING HEADQUARTERS FACILITY	3,244
LANGLEY AFB	VIRGINIA	ALTER AIR COMBAT COMMAND HEADQUARTERS FACI (MEMO-NON-ADD)	(263)
**AIR FORCE			3,244
(MEMO-NON-ADD)			(263)
DEFENSE MAPPING AGENCY			
DMA AEROSPACE CENTER	MISSOURI	REPLACE DESTROYED/DAMAGED FAC W/LAND ACQ	40,300
**DEFENSE MAPPING AGENCY			40,300
DEFENSE FINANCE AND ACCOUNTING SERVICE			
COLUMBUS CENTER	OHIO	CONSTRUCT A MULTISTORY ADMIN FAC (DBOF)	72,403
**DEFENSE FINANCE AND ACCOUNTING SERVICE			72,403
AIR NATIONAL GUARD			
PUERTO RICO IAP	PUERTO RICO	ADD TO AND ALTER COMPOSITE SUPT FACILITY	510
**AIR NATIONAL GUARD			510
** ADMINSTRATIVE FACILITIES			133,327
(MEMO-NON-ADD)			(263)
TROOP HOUSING FACILITIES			
ARMY			
FORT HUACHUCA	ARIZONA	WHOLE BARRACKS COMPLEX RENEWAL	16,000
FORT LESLEY J MCNAIR	DISTRICT OF COLUMBIA	WHOLE BARRACK COMPLEX RENEWAL	5,500
FORT BENNING	GEORGIA	WHOLE BARRACKS COMPLEX RENEWAL	33,000
FORT BRAGG	NORTH CAROLINA	WHOLE BARRACKS COMPLEX RENEWAL	18,500
FORT JACKSON	SOUTH CAROLINA	WHOLE BARRACK COMPLEX RENEWAL	32,000
FORT BLISS	TEXAS	WHOLE BARRACK COMPLEX RENEWAL	48,000
FORT HOOD	TEXAS	WHOLE BARRACK CONPLEX RENEWAL	17,500
COMBINED FIELD ARMY	KOREA	WHOLE BARRACKS COMPLEX RENEWAL	6,800
EASTERN CORRIDOR	KOREA	DINING FACILITY	4,150
EASTERN CORRIDOR	KOREA	WHOLE BARRACKS COMPLEX RENEWAL	6,200
EASTERN CORRIDOR	KOREA	WHOLE BARRACKS COMPLEX RENEWAL	7,300
WESTERN CORRIDOR	KOREA	WHOLE BARRACKS COMPLEX RENEWAL	5,600
**ARMY			200,550
NAVY			
CAMP PENDLETON MARINE CORPS BASE	CALIFORNIA	BACHELOR ENLISTED QUARTERS	11,940
ANNAPOLIS NAVAL STATION	MARYLAND	BACHELOR ENLISTED QUARTERS	3,600
CAMP LEJEUNE MARINE CORPS BASE	NORTH CAROLINA	BACHELOR ENLISTED QUARTERS	8,300
NEW RIVER MARINE CORPS AIR STATION	NORTH CAROLINA	BACHELOR ENLISTED QUARTERS	14,650
PORTSMOUTH NAVAL HOSPITAL	VIRGINIA	BACHELOR ENLISTED QUARTERS	9,500
WILLIAMSBURG FLEET & INDUSTRIAL SUPPLY CT	VIRGINIA	BACHELOR ENLISTED QUARTERS	6,140
NAVAL COMPUTER&TELCOM AREA MASTERSTA WPAC	GUAM	BACHELOR ENLISTED QUARTERS MODERNIZATION	2,250
NAPLES NAVAL SUPPORT ACTIVITY	ITALY	QUALITY OF LIFE FACILITIES (PHASE III)	14,950
SIGONELLA NAVAL AIR STATION	ITALY	BACHELOR ENLISTED QUARTERS	11,300
**NAVY			82,630

FY 1996 MILITARY CONSTRUCTION TOTAL OBLIGATIONAL AUTHORITY AS REQUESTED

ACTIVE GUARD AND RESERVE FORCES
BY TYPE OF FACILITY
($ THOUSANDS)

DATA AS OF FEB 1995

INSTALLATION	LOCATION	PROJECT	TOTAL
TROOP HOUSING FACILITIES			
AIR FORCE			
EIELSON AFB	ALASKA	ALTER DORMITORY	3,850
ELMENDORF AFB	ALASKA	VISITING OFFICERS QUARTERS	7,350
DAVIS-MONTHAN AFB	ARIZONA	DORMITORY	3,800
LUKE AFB	ARIZONA	DORMITORY	5,200
EDWARDS AFB	CALIFORNIA	DORMITORY	10,600
TRAVIS AFB	CALIFORNIA	DORMITORIES	10,500
TRAVIS AFB	CALIFORNIA	DORMITORY	6,400
BUCKLEY ANG BASE	COLORADO	TROOP SUPPORT FACILITIES	5,500
PETERSON AFB	COLORADO	ADD TO AND ALTER DORMITORY	3,000
BOLLING AIR FORCE BASE	DISTRICT OF COLUMBIA	ALTER DORMITORY	6,500
BOLLING AIR FORCE BASE	DISTRICT OF COLUMBIA	HONOR GUARD DORMITORY	5,600
HICKAM AFB	HAWAII	ALTER DORMITORY	3,100
HICKAM AFB	HAWAII	ALTER TRANSIENT DORMITORY	3,050
SCOTT AFB	ILLINOIS	DORMITORY	8,000
SCOTT AFB	ILLINOIS	GLOBAL REACH PLANNING CENTER VISITING QUAR	4,700
MCCONNELL AFB	KANSAS	ALTER DORMITORY	2,200
ANDREWS AFB	MARYLAND	DORMITORY	6,000
KEESLER AFB	MISSISSIPPI	UPGRADE STUDENT DORMITORY	6,500
NELLIS AFB	NEVADA	VISITING QUARTERS	9,900
GRAND FORKS AFB	NORTH DAKOTA	DORMITORY	8,500
TINKER AFB	OKLAHOMA	ADD TO AND ALTER DORMITORIES	5,100
CHARLESTON AFB	SOUTH CAROLINA	DORMITORY	5,600
FAIRCHILD AFB	WASHINGTON	ALTER DORMITORIES	7,500
MCCHORD AFB	WASHINGTON	DORMITORY	4,300
FE WARREN AFB	WYOMING	ALTER DORMITORIES	5,500
SPANGDAHLEM AB	GERMANY	DORMITORY	5,900
ARAXOS	GREECE	DORMITORY	1,950
GHEDI AIRFIELD	ITALY	DORMITORY	1,450
**AIR FORCE			157,550
AIR NATIONAL GUARD			
MCGHEE-TYSON AIRPORT	TENNESSEE	PMEC SCHOOL TRAINING QUARTERS	4,400
**AIR NATIONAL GUARD			4,400
** TROOP HOUSING FACILITIES			445,130
COMMUNITY FACILITIES			
NAVY			
CAMP PENDLETON MARINE CORPS BASE	CALIFORNIA	CHILD DEVELOPMENT CENTER	3,000
CAMP PENDLETON MARINE CORPS BASE	CALIFORNIA	PHYSICAL FITNESS CENTER	4,100
PT MUGU NAVAL AIR WARFARE CTR WPNS DIV	CALIFORNIA	CHILD DEVELOPMENT CENTER (DBOF)	1,300
PENSACOLA NAVAL TECHNICAL TRAINING CENTER	FLORIDA	CHILD DEVELOPMENT CENTER	2,565
LAKEHURST NAVAIRWARFARE CTR AIRCRAFT DIV	NEW JERSEY	CHILD DEVELOPMENT CENTER (DBOF)	1,700
**NAVY			12,665
AIR FORCE			
MAXWELL AFB	ALABAMA	CHILD DEVELOPMENT CENTER COMPLEX	3,700
US AIR FORCE ACADEMY	COLORADO	CHILD DEVELOPMENT CENTER	4,200
VOGELWEH	GERMANY	CHILD DEVELOPMENT CENTER	2,600
INCIRLIK AB	TURKEY	CHILD DEVELOPMENT CENTER	1,600
RAF MILDENHALL	UNITED KINGDOM	ADD TO AND ALTER CHILD DEVELOPMENT CENTER	2,250
**AIR FORCE			14,350
DOD DEPENDENT SCHOOLS			
MAXWELL AFB	ALABAMA	MAXWELL ELEM SCHOOL ADDITION/ALTERATION	5,479

FY 1996 MILITARY CONSTRUCTION TOTAL OBLIGATIONAL AUTHORITY AS REQUESTED

ACTIVE GUARD AND RESERVE FORCES
BY TYPE OF FACILITY
($ THOUSANDS)

DATA AS OF FEB 1995

INSTALLATION	LOCATION	PROJECT	TOTAL
COMMUNITY FACILITIES			
DOD DEPENDENT SCHOOLS			
FORT BENNING	GEORGIA	FAITH MIDDLE SCHOOL ADDITION	1,116
FT JACKSON	SOUTH CAROLINA	PIERCE TERRACE ELEM SCHOOL ADDITION	576
RAMSTEIN	GERMANY	ELEMENTARY/JUNIOR HIGH SCHOOL ADDITIONS	19,205
SIGONELLA NAVAL AIR STATION	ITALY	ELEMENTARY/HIGH SCHOOL ADDITIONS	7,595
**DOD DEPENDENT SCHOOLS			33,971
AIR NATIONAL GUARD			
DANNELLY FIELD	ALABAMA	FIRE STATION	1,445
WILL ROGERS WORLD AIRPORT	OKLAHOMA	COMPOSITE FIRE STATION	1,950
MEMPHIS IAP	TENNESSEE	ADD TO & ALTER SECURITY POLICE OPS FAC	1,100
**AIR NATIONAL GUARD			4,495
** COMMUNITY FACILITIES			65,481
UTILITY FACILITIES			
ARMY			
PRESIDIO OF SAN FRANCISCO	CALIFORNIA	REGIONAL SEWER SYSTEM	3,000
FORT CARSON	COLORADO	SANITARY SEWER SYSTEM	1,750
FORT CARSON	COLORADO	SEWAGE TREATMENT PLANT	9,100
WATERVLIET ARSENAL	NEW YORK	OIL RUNOFF CONTAINMENT FACILITY (DBOF)	680
FORT LEWIS	WASHINGTON	RAIL SPUR & TANK TRAILS-YAKIMA	3,200
FORT LEWIS	WASHINGTON	TANK TRAIL EROSION MITIGATION-YAKIMA	2,000
**ARMY			19,730
NAVY			
CAMP PENDLETON MARINE CORPS BASE	CALIFORNIA	WATER DISTRIBUTION SYSTEM	1,410
WILLIAMSBURG FLEET & INDUSTRIAL SUPPLY CT	VIRGINIA	ELECTRICAL DISTRIBUTION SYS ALTERATIONS	2,250
SIGONELLA NAVAL AIR FACILITY	ITALY	FIRE PROTECTION SYSTEM	870
SABANA SECA NAVAL SECURITY GROUP ACTIVITY	PUERTO RICO	ROAD IMPROVEMENTS	2,200
**NAVY			6,730
AIR FORCE			
LITTLE ROCK AFB	ARKANSAS	UPGRADE SANITARY SEWER SYSTEM	2,500
US AIR FORCE ACADEMY	COLORADO	UPGRADE FACILITIES HEATING SYSTEM	4,950
MOODY AFB	GEORGIA	UPGRADE STORM DRAINAGE SYSTEM	690
WHITEMAN AFB	MISSOURI	B-2 ADD TO AND ALTER DOCK FIRE PROTECTION	3,500
KIRTLAND AFB	NEW MEXICO	UPGRADE ELECTRICAL DISTRIBUTION SYSTEM	7,656
WRIGHT-PATTERSON AFB	OHIO	UPGRADE ELECTRICAL DISTRIBUTION SYSTEM	4,100
ARNOLD ENGINEERING DEV CENTER	TENNESSEE	UPGRADE FIRE PROTECTION SYSTEMS	2,700
FE WARREN AFB	WYOMING	UPGRADE CENTRAL HEAT PLANT	3,500
**AIR FORCE			29,596
DEFENSE LEVEL ACTIVITIES			
OSD MILCON	CONUS CLASSIFIED	CLASSIFIED LOCATION	11,500
UNSPECIFIED WORLDWIDE LOCATIONS	WORLDWIDE UNSPECIFIED	CONTINGENCY CONSTRUCTION	11,037
**DEFENSE LEVEL ACTIVITIES			22,537
NATIONAL SECURITY AGENCY			
FORT MEADE	MARYLAND	CRITICAL UTILITIES CONTROL, PHASE I	3,301
FORT MEADE	MARYLAND	SPL STEAM GENERATION PLANT	632
MENWITH HILL STATION	UNITED KINGDOM	WAREHOUSE SPRINKLERS	677
**NATIONAL SECURITY AGENCY			4,610

FY 1996 MILITARY CONSTRUCTION TOTAL OBLIGATIONAL AUTHORITY AS REQUESTED

ACTIVE GUARD AND RESERVE FORCES
BY TYPE OF FACILITY
($ THOUSANDS)

DATA AS OF FEB 1995

INSTALLATION	LOCATION	PROJECT	TOTAL
UTILITY FACILITIES			
DEF INTELLIGENCE AGENCY			
BOLLING AFB	DISTRICT OF COLUMBIA	BOILER DIAC	498
BOLLING AFB	DISTRICT OF COLUMBIA	PARKING DIAC	1,245
**DEF INTELLIGENCE AGENCY			1,743
DEFENSE LOGISTICS AGENCY			
DEF DISTRIBUTION NEW CUMBERLAND - DDSP	PENNSYLVANIA	TRANSPORT CONTROL FACILITY (DBOF)	4,600
**DEFENSE LOGISTICS AGENCY			4,600
AIR NATIONAL GUARD			
BUCKLEY ANGB	COLORADO	UPGRADE HEATING SYSTEMS	950
SELFRIDGE ANGB	MICHIGAN	UPGRADE HEATING SYSTEMS	2,900
MINN-ST PAUL IAP	MINNESOTA	UPGRADE HEATING SYSTEM	780
ATLANTIC CITY	NEW JERSEY	UPGRADE SANITARY AND WATER SYSTEM	650
NIAGARA FALLS IAP	NEW YORK	UPGRADE STORM WATER & SANITARY SEWER SYS	400
KELLY AFB	TEXAS	UPGRADE HEATING AND COOLING SYSTEMS	1,400
PUERTO RICO IAP	PUERTO RICO	UPGRADE SECURITY SYSTEM	1,350
**AIR NATIONAL GUARD			8,430
AIR FORCE RESERVE			
YOUNGSTOWN MAP	OHIO	ADD TO ALTER ELECTRIC SUBSTATION	4,230
YOUNGSTOWN MAP	OHIO	UPGRADE BASE WATER DISTRIBUTION SYSTEM	1,000
**AIR FORCE RESERVE			5,230
** UTILITY FACILITIES			103,206
REAL ESTATE			
ARMY			
FORT MYER	VIRGINIA	ARMY MUSEUM LAND ACQUISITION	17,000
**ARMY			17,000
NAVY			
SAN DIEGO NAVCMDCTRL&OCEANSURVCTRDTEDIV	CALIFORNIA	TEST FACILITY DEMOLITION	3,170
DAM NECK FLEET COMBAT TRAIN CTR ATLANTIC	VIRGINIA	LAND ACQUISTION (MEMO-NON-ADD)	(4,850)
**NAVY			3,170
(MEMO-NON-ADD)			(4,850)
** REAL ESTATE			20,170
(MEMO-NON-ADD)			(4,850)
AIR POLLUTION ABATEMENT			
AIR FORCE			
DAVIS-MONTHAN AFB	ARIZONA	ALTER AIRCRAFT CORROSION CONTROL FACILITY	1,000
ARNOLD ENGINEERING DEV CENTER	TENNESSEE	UPGRADE ENGINE TEST FACILITIES REFRIGERATI	2,300
**AIR FORCE			3,300
WATER POLLUTION ABATEMENT			
NAVY			
CHINA LAKE NAVAL AIR WARFARE CTR WPNS DIV	CALIFORNIA	INDUSTRL WSTWTR COLLECT & TRTMT FAC(DBOF)	3,700

FY 1996 MILITARY CONSTRUCTION TOTAL OBLIGATIONAL AUTHORITY AS REQUESTED

ACTIVE GUARD AND RESERVE FORCES
BY TYPE OF FACILITY
($ THOUSANDS)

DATA AS OF FEB 1995

INSTALLATION	LOCATION	PROJECT	TOTAL
WATER POLLUTION ABATEMENT			
NAVY			
SAN DIEGO NAVAL STATION	CALIFORNIA	OILY WASTE COLLECTION AND TREATMENT FAC	19,960
CAMP LEJEUNE MARINE CORPS BASE	NORTH CAROLINA	WASTEWATER TREATMENT PLANT (PHASE II)	45,500
NORFOLK NAVAL STATION	VIRGINIA	OILY WASTE COLLECTION SYSTEM (PHASE I)	10,580
NAVY PUBLIC WORKS CENTER	GUAM	WASTEWATER TREATMENT PLANT UPGRADES	16,180
ROOSEVELT ROADS NAVAL STATION	PUERTO RICO	SANITARY LANDFILL	11,500
**NAVY			107,420
AIR FORCE			
BEALE AFB	CALIFORNIA	LANDFILL CLOSURE	7,500
TRAVIS AFB	CALIFORNIA	HAZARDOUS WASTE STORAGE FACILITY (DBOF) (MEMO-NON-ADD)	(600)
CAPE CANAVERAL AFS	FLORIDA	FIRE TRAINING FACILITY	1,600
TYNDALL AFB	FLORIDA	FIRE TRAINING FACILITY	1,200
MOUNTAIN HOME AFB	IDAHO	UPGRADE STORM DRAINAGE SYSTEM	800
MOUNTAIN HOME AFB	IDAHO	WASTEWATER TREATMENT AND DISPOSAL PLANT	9,850
MCCONNELL AFB	KANSAS	DEICING PAD	1,150
ANDREWS AFB	MARYLAND	UNDERGROUND FUEL STORAGE TANKS	6,886
COLUMBUS AFB	MISSISSIPPI	FIRE TRAINING FACILITY	1,150
NELLIS AFB	NEVADA	UPGRADE STORM DRAINAGE SYSTEM	600
MCGUIRE AFB	NEW JERSEY	FIRE TRAINING FACILITY	1,600
CANNON AFB	NEW MEXICO	UPGRADE STORM DRAINAGE SYSTEM	620
CANNON AFB	NEW MEXICO	WASTEWATER TREATMENT AND DISPOSAL PLANT	9,800
KIRTLAND AFB	NEW MEXICO	UPGRADE STORM DRAINAGE SYSTEM	1,500
POPE AFB	NORTH CAROLINA	UNDERGROUND FUEL STORAGE TANKS	2,150
SEYMOUR JOHNSON AFB	NORTH CAROLINA	UPGRADE STORM DRAINAGE SYSTEM	830
MINOT AFB	NORTH DAKOTA	UNDERGROUND FUEL STORAGE TANKS	1,550
ALTUS AFB	OKLAHOMA	FIRE TRAINING FACILITY	1,200
SHAW AFB	SOUTH CAROLINA	UPGRADE STORM DRAINAGE SYSTEM	1,300
LAUGHLIN AFB	TEXAS	FIRE TRAINING FACILITY	1,400
RANDOLPH AFB	TEXAS	FIRE TRAINING FACILITY	1,200
REESE AFB	TEXAS	FIRE TRAINING FACILITY	1,200
LANGLEY AFB	VIRGINIA	UPGRADE STORM DRAINAGE SYSTEM	1,000
INCIRLIK AB	TURKEY	UPGRADE SEWAGE TREATMENT PLANT	2,900
**AIR FORCE			58,986
(MEMO-NON-ADD)			(600)
** WATER POLLUTION ABATEMENT			166,406
(MEMO-NON-ADD)			(600)
UNSPECIFIED MINOR CONSTRUCTION			
ARMY	WORLDWIDE UNSPECIFIED		9,000
NAVY	WORLDWIDE UNSPECIFIED		7,200
AIR FORCE	WORLDWIDE UNSPECIFIED		9,030
SPECIAL OPERATIONS COMMAND	WORLDWIDE UNSPECIFIED		1,700
BALLISTIC MISSILE DEFENSE ORAGNIZATION	WORLDWIDE UNSPECIFIED		2,909
DEFENSE LEVEL ACTIVITIES	WORLDWIDE UNSPECIFIED		3,100
JOINT CHIEFS OF STAFF	WORLDWIDE UNSPECIFIED		6,198
DOD DEPENDENT SCHOOLS	WORLDWIDE UNSPECIFIED		4,000
DEFENSE MEDICAL SUPPORT ACTIVITY	WORLDWIDE UNSPECIFIED		5,100
ARMY NATIONAL GUARD	WORLDWIDE UNSPECIFIED		5,300
AIR NATIONAL GUARD	WORLDWIDE UNSPECIFIED		4,100
ARMY RESERVE	WORLDWIDE UNSPECIFIED		1,700
AIR FORCE RESERVE	WORLDWIDE UNSPECIFIED		4,169
** UNSPECIFIED MINOR CONSTRUCTION			63,506
PLANNING & DESIGN			
ARMY	WORLDWIDE UNSPECIFIED		20,000

FY 1996 MILITARY CONSTRUCTION TOTAL OBLIGATIONAL AUTHORITY AS REQUESTED

ACTIVE GUARD AND RESERVE FORCES
BY TYPE OF FACILITY
($ THOUSANDS)

DATA AS OF FEB 1995

INSTALLATION	LOCATION	PROJECT	TOTAL
PLANNING & DESIGN			
ARMY			
ARMY	WORLDWIDE UNSPECIFIED		32,894
NAVY	WORLDWIDE UNSPECIFIED		44,457
AIR FORCE	WORLDWIDE UNSPECIFIED		30,835
ARMY BUDGETED BY DOD	WORLDWIDE UNSPECIFIED		13,000
SPECIAL OPERATIONS COMMAND	WORLDWIDE UNSPECIFIED		5,407
DEFENSE FINANCE AND ACCOUNTING SERVICE	WORLDWIDE UNSPECIFIED		8,600
BALLISTIC MISSILE DEFENSE ORAGNIZATION	WORLDWIDE UNSPECIFIED		500
DEFENSE LEVEL ACTIVITIES	WORLDWIDE UNSPECIFIED		13,000
DEFENSE MEDICAL SUPPORT ACTIVITY	WORLDWIDE UNSPECIFIED		28,330
ARMY NATIONAL GUARD	WORLDWIDE UNSPECIFIED		2,900
AIR NATIONAL GUARD	WORLDWIDE UNSPECIFIED		4,580
ARMY RESERVE	WORLDWIDE UNSPECIFIED		3,694
NAVY RESERVE	WORLDWIDE UNSPECIFIED		2,974
AIR FORCE RESERVE	WORLDWIDE UNSPECIFIED		2,700
** PLANNING & DESIGN			213,871
BASE REALIGNMENT & CLOSURE ACCT PART II			
DEFENSE LEVEL ACTIVITIES			
BASE REALIGNMENT & CLOSURE ACCT PART II	WORLDWIDE UNSPECIFIED	BASE REALIGNMENT & CLOSURE PART II	1,044,143
**DEFENSE LEVEL ACTIVITIES			1,044,143
BASE REALIGNMENT & CLOSURE ACCT PART III			
DEFENSE LEVEL ACTIVITIES			
BASE REALIGNMENT & CLOSURE ACCT PART III	WORLDWIDE UNSPECIFIED	BASE REALIGNMENT & CLOSURE ACCT PART III	2,148,480
**DEFENSE LEVEL ACTIVITIES			2,148,480
BASE REALIGNMENT & CLOSURE ACCT PART IV			
DEFENSE LEVEL ACTIVITIES			
BASE REALIGNMENT & CLOSURE ACCT PART IV	WORLDWIDE UNSPECIFIED	BASE REALIGNMENT & CLOSURE ACCT PART IV	784,569
**DEFENSE LEVEL ACTIVITIES			784,569
NATO INFRASTRUCTURE			
DEFENSE LEVEL ACTIVITIES			
OSD MILCON	WORLDWIDE UNSPECIFIED	NATO INFRASTRUCTURE	199,000
**DEFENSE LEVEL ACTIVITIES			199,000

FY 1996 FAMILY HOUSING TOTAL OBLIGATIONAL AUTHORITY AS REQUESTED

BY TYPE OF FACILITY
($ THOUSANDS)
DATA AS OF FEB 1995

INSTALLATION	LOCATION	PROJECT	TOTAL
FAMILY HOUSING, AIR FORCE			
TYNDALL AFB	FLORIDA	REPLACE 52 MILITARY FAMILY HOUSING UNITS	5,500
MOODY AFB	GEORGIA	REPLACE 1 SR OFF QTRS/1 GEN OFF QTRS, CON	513
MOUNTAIN HOME AFB	IDAHO	CONSTRUCT HOUSING MANAGEMENT FACILITY	844
MCCONNELL AFB	KANSAS	REPLACE 39 HOUSING UNITS	5,193
BARKSDALE AFB	LOUISIANA	REPLACE 62 MILITARY FAMILY HOUSING UNITS,	10,299
KEESLER AFB	MISSISSIPPI	REPLACE 98 MILITARY FAMILY HOUSING UNITS	9,300
WHITEMAN AFB	MISSOURI	CONSTRUCT 72 MILITARY FAMILY HOUSING UNITS	9,948
NELLIS AFB	NEVADA	REPLACE 6 SENIOR OFFICERS HOUSING	1,357
HOLLOMAN AFB	NEW MEXICO	REPLACE 1 GENERAL OFFICER'S HOUSING	225
KIRTLAND AFB	NEW MEXICO	REPLACE 105 FAMILY HOUSING UNITS, PHASE 2	11,000
POPE AFB	NORTH CAROLINA	CONSTRUCT 104 MILITARY FAMILY HOUSING UNIT	9,984
SEYMOUR JOHNSON AFB	NORTH CAROLINA	REPLACE 1 GENERAL OFFICERS QUARTERS	204
SHAW AFB	SOUTH CAROLINA	HOUSING MAINTENANCE FACILITY	715
DYESS AFB	TEXAS	CONSTRUCT HOUSING MAINTENANCE FACILITY	580
DYESS AFB	TEXAS	REPLACE 150 MILITARY FAMILY HOUSING UNITS	246
LACKLAND AFB	TEXAS	REPLACE 67 MILITARY FAMILY HOUSING UNITS,	6,200
SHEPPARD AFB	TEXAS	CONSTRUCT MANAGEMENT OFFICE	500
SHEPPARD AFB	TEXAS	REPLACE FAMILY HOUSING MAINTENANCE FAC	600
MCCHORD AFB	WASHINGTON	REPLACE 50 FAMILY HOUSING UNITS, PHASE I	9,504
ANDERSEN AFB	GUAM	HOUSING MAINTENANCE FACILITY	1,700
INCIRLIK AB	TURKEY	REPLACE 150 MILITARY FAMILY HOUSING UNITS	9,900
		CONSTRUCTION IMPROVEMENTS	85,059
		PLANNING	8,989
		FURNISHINGS ACCOUNT	43,000
		MANAGEMENT ACCOUNT	45,154
		MISCELLANEOUS ACCOUNT	5,678
		SERVICES ACCOUNT	33,177
		UTILITIES ACCOUNT	197,539
		LEASING	115,665
		MAINTENANCE OF REAL PROPERTY	408,971
		MORTGAGE INSURANCE PREMIUMS	29
TOTAL FAMILY HOUSING, AIR FORCE			1,098,216
FAMILY HOUSING, DEFENSE LEVEL ACTIVITIES			
UNSPECIFIED WORLDWIDE LOCATIONS	WORLDWIDE UNSPECIFIED	PRIVATE SECTOR HSG VENTURES,LOCATIONS TBD	22,000
TOTAL FAMILY HOUSING, ASDA			22,000
FAMILY HOUSING, NATIONAL SECURITY AGENCY			
		CONSTRUCTION IMPROVEMENTS	50
		FURNISHINGS ACCOUNT	784
		MANAGEMENT ACCOUNT	70
		MISCELLANEOUS ACCOUNT	36
		SERVICES ACCOUNT	350
		UTILITIES ACCOUNT	400
		LEASING	11,236
		MAINTENANCE OF REAL PROPERTY	223
TOTAL FAMILY HOUSING, NSA			13,149
FAMILY HOUSING, DEF INTELLIGENCE AGENCY			
		FURNISHINGS ACCOUNT	2,590
		LEASING	13,638
TOTAL FAMILY HOUSING, DIA			16,228
FAMILY HOUSING, DEFENSE LOGISTICS AGENCY			
		CONSTRUCTION IMPROVEMENTS	3,722

FY 1996 FAMILY HOUSING TOTAL OBLIGATIONAL AUTHORITY AS REQUESTED

BY TYPE OF FACILITY
($ THOUSANDS)

DATA AS OF FEB 1995

INSTALLATION	LOCATION	PROJECT	TOTAL
FAMILY HOUSING, DEFENSE LOGISTICS AGENCY			
		FURNISHINGS ACCOUNT	26
		MANAGEMENT ACCOUNT	161
		SERVICES ACCOUNT	33
		UTILITIES ACCOUNT	346
		MAINTENANCE OF REAL PROPERTY	574
TOTAL FAMILY HOUSING, DLA			4,862
GRAND TOTAL FAMILY HOUSING, DEFENSE AGENCIES			56,239
HOMEOWNERS ASSISTANCE			
		PAYMENT TO HOMEOWNERS	23,862
		OTHER OPERATING COSTS	35,847
		ACQUISITION OF REAL PROPERTY	178,769
HOMEOWNERS ASSISTANCE			238,478
GRAND TOTAL FAMILY HOUSING			4,288,113

FY 1997 CONSTRUCTION ANNEX TOTAL OBLIGATIONAL AUTHORITY AS REQUESTED

TOTAL CONSTRUCTION ANNEX
BY TYPE OF FACILITY
($ THOUSANDS)

SUMMARY BY FACILITY	ARMY	NAVY	AIR FORCE	DATA AS OF FEB 1995 DEF. AGS.	TOTAL
OPERATIONAL FACILITIES	20,000	49,110	161,955	210,856	441,921
TRAINING FACILITIES	58,547	25,064	50,037		133,648
MAINTENANCE & PRODUCTION FACILITIES	3,650	76,350	82,307	259,500	421,807
R&D FACILITIES			19,200	4,700	23,900
SUPPLY FACILITIES	73,382	2,000	36,700	38,700	150,782
HOSPITAL AND MEDICAL FACILITIES				191,290	191,290
AUTHORIZED IN PRIOR YEAR				(89,000)	(89,000)
ADMINSTRATIVE FACILITIES			7,980	91,175	99,155
TROOP HOUSING FACILITIES	297,900	176,280	80,498		554,678
COMMUNITY FACILITIES		15,430	9,850		25,280
UTILITY FACILITIES	2,000	5,460	25,423	40,645	73,528
REAL ESTATE			7,200		7,200
SUPPORTING ACTIVITIES		500			500
AIR POLLUTION ABATEMENT			8,200		8,200
WATER POLLUTION ABATEMENT		65,450	47,970		113,420
UNSPECIFIED MINOR CONSTRUCTION	14,300	7,400	17,754	21,524	60,978
PLANNING & DESIGN	91,762	46,521	39,542	64,886	242,711
BASE REALIGNMENT & CLOSURE ACCT PART II				255,957	255,957
BASE REALIGNMENT & CLOSURE ACCT PART III				1,291,764	1,291,764
BASE REALIGNMENT & CLOSURE ACCT PART IV				824,200	824,200
NATO INFRASTRUCTURE				199,000	199,000
FAMILY HOUSING CONSTRUCTION	171,913	427,069	258,938	298,754	1,156,674
FAMILY HOUSING DEBT	11	80	30		121
FAMILY HOUSING OPERATIONS	1,227,839	1,026,608	857,127	30,815	3,142,389
HOMEOWNERS ASSISTANCE	166,340				166,340
*** TOTAL ***	2,127,644	1,923,322	1,710,711	3,823,766	9,585,443
AUTHORIZED IN PRIOR YEAR				(89,000)	(89,000)

FY 1997 CONSTRUCTION ANNEX TOTAL OBLIGATIONAL AUTHORITY AS REQUESTED

SUMMARY BY FACILITY	----TOTAL MILCON----- BY TYPE OF FACILITY ($ THOUSANDS) ARMY	NAVY	AIR FORCE	DATA AS OF FEB 1995 DEF. AGS.	TOTAL
OPERATIONAL FACILITIES	20,000	49,110	161,955	210,856	441,921
TRAINING FACILITIES	58,547	25,064	50,037		133,648
MAINTENANCE & PRODUCTION FACILITIES	3,650	76,350	82,307	259,500	421,807
R&D FACILITIES			19,200	4,700	23,900
SUPPLY FACILITIES	73,382	2,000	36,700	38,700	150,782
HOSPITAL AND MEDICAL FACILITIES				191,290	191,290
AUTHORIZED IN PRIOR YEAR				(89,000)	(89,000)
ADMINSTRATIVE FACILITIES			7,980	91,175	99,155
TROOP HOUSING FACILITIES	297,900	176,280	80,498		554,678
COMMUNITY FACILITIES		15,430	9,850		25,280
UTILITY FACILITIES	2,000	5,460	25,423	40,645	73,528
REAL ESTATE			7,200		7,200
SUPPORTING ACTIVITIES		500			500
AIR POLLUTION ABATEMENT			8,200		8,200
WATER POLLUTION ABATEMENT		65,450	47,970		113,420
UNSPECIFIED MINOR CONSTRUCTION	14,300	7,400	17,754	21,524	60,978
PLANNING & DESIGN	91,762	46,521	39,542	64,886	242,711
BASE REALIGNMENT & CLOSURE ACCT PART II				255,957	255,957
BASE REALIGNMENT & CLOSURE ACCT PART III				1,291,764	1,291,764
BASE REALIGNMENT & CLOSURE ACCT PART IV				824,200	824,200
NATO INFRASTRUCTURE				199,000	199,000
*** TOTAL ***	561,541	469,565	594,616	3,494,197	5,119,919
AUTHORIZED IN PRIOR YEAR				(89,000)	(89,000)

FY 1997 CONSTRUCTION ANNEX TOTAL OBLIGATIONAL AUTHORITY AS REQUESTED

SUMMARY BY FACILITY	----ACTIVE FORCES---- BY TYPE OF FACILITY ($ THOUSANDS) ARMY	NAVY	AIR FORCE	DATA AS OF FEB 1995 DEF. AGS.	TOTAL
OPERATIONAL FACILITIES	20,000	49,110	152,556	210,856	432,522
TRAINING FACILITIES	18,800	19,663	28,580		67,043
MAINTENANCE & PRODUCTION FACILITIES		76,350	36,150	259,500	372,000
R&D FACILITIES			19,200	4,700	23,900
SUPPLY FACILITIES	64,000	2,000	28,500	38,700	133,200
HOSPITAL AND MEDICAL FACILITIES				191,290	191,290
AUTHORIZED IN PRIOR YEAR				(89,000)	(89,000)
ADMINSTRATIVE FACILITIES			7,980	91,175	99,155
TROOP HOUSING FACILITIES	297,900	172,710	80,498		551,108
COMMUNITY FACILITIES		15,430	9,350		24,780
UTILITY FACILITIES	2,000	5,460	17,323	40,645	65,428
REAL ESTATE			900		900
SUPPORTING ACTIVITIES		500			500
AIR POLLUTION ABATEMENT			8,200		8,200
WATER POLLUTION ABATEMENT		65,450	47,970		113,420
UNSPECIFIED MINOR CONSTRUCTION	5,000	7,400	9,328	21,524	43,252
PLANNING & DESIGN	84,382	46,410	32,417	64,886	228,095
BASE REALIGNMENT & CLOSURE ACCT PART II				255,957	255,957
BASE REALIGNMENT & CLOSURE ACCT PART III				1,291,764	1,291,764
BASE REALIGNMENT & CLOSURE ACCT PART IV				824,200	824,200
NATO INFRASTRUCTURE				199,000	199,000
*** TOTAL ***	492,082	460,483	478,952	3,494,197	4,925,714
AUTHORIZED IN PRIOR YEAR				(89,000)	(89,000)

FY 1997 CONSTRUCTION ANNEX TOTAL OBLIGATIONAL AUTHORITY AS REQUESTED

NATIONAL GUARD FORCES
BY TYPE OF FACILITY
($ THOUSANDS)

DATA AS OF FEB 1995

SUMMARY BY FACILITY	ARMY	NAVY	AIR FORCE	DEF. AGS.	TOTAL
OPERATIONAL FACILITIES			9,399		9,399
TRAINING FACILITIES	1,250		7,450		8,700
MAINTENANCE & PRODUCTION FACILITIES	3,650		37,547		41,197
SUPPLY FACILITIES			8,200		8,200
COMMUNITY FACILITIES			500		500
UTILITY FACILITIES			7,150		7,150
REAL ESTATE			6,300		6,300
UNSPECIFIED MINOR CONSTRUCTION	5,500		4,100		9,600
PLANNING & DESIGN	3,900		4,725		8,625
*** TOTAL ***	14,300		85,371		99,671

FY 1997 CONSTRUCTION ANNEX TOTAL OBLIGATIONAL AUTHORITY AS REQUESTED

SUMMARY BY FACILITY	---RESERVE FORCES---- BY TYPE OF FACILITY ($ THOUSANDS) ARMY	NAVY	AIR FORCE	DATA AS OF FEB 1995 TOTAL
TRAINING FACILITIES	38,497	5,401	14,007	57,905
MAINTENANCE & PRODUCTION FACILITIES			8,610	8,610
SUPPLY FACILITIES	9,382			9,382
TROOP HOUSING FACILITIES		3,570		3,570
UTILITY FACILITIES			950	950
UNSPECIFIED MINOR CONSTRUCTION	3,800		4,326	8,126
PLANNING & DESIGN	3,480	111	2,400	5,991
*** TOTAL ***	55,159	9,082	30,293	94,534

FY 1997 CONSTRUCTION ANNEX TOTAL OBLIGATIONAL AUTHORITY AS REQUESTED

TOT GUARD AND RESERVE
BY TYPE OF FACILITY
($ THOUSANDS)

DATA AS OF FEB 1995

SUMMARY BY FACILITY	ARMY	NAVY	AIR FORCE		TOTAL
OPERATIONAL FACILITIES			9,399		9,399
TRAINING FACILITIES	39,747	5,401	21,457		66,605
MAINTENANCE & PRODUCTION FACILITIES	3,650		46,157		49,807
SUPPLY FACILITIES	9,382		8,200		17,582
TROOP HOUSING FACILITIES		3,570			3,570
COMMUNITY FACILITIES			500		500
UTILITY FACILITIES			8,100		8,100
REAL ESTATE			6,300		6,300
UNSPECIFIED MINOR CONSTRUCTION	9,300		8,426		17,726
PLANNING & DESIGN	7,380	111	7,125		14,616
*** TOTAL ***	69,459	9,082	115,664		194,205

FY 1997 CONSTRUCTION ANNEX TOTAL OBLIGATIONAL AUTHORITY AS REQUESTED

---FAMILY HOUSING---

($ THOUSANDS) DATA AS OF FEB 1995

SUMMARY BY FACILITY	ARMY	NAVY	AIR FORCE	DEF. AGS.	TOTAL
FAMILY HOUSING CONSTRUCTION	171,913	427,069	258,938	298,754	1,156,674
FAMILY HOUSING DEBT	11	80	30		121
FAMILY HOUSING OPERATIONS	1,227,839	1,026,608	857,127	30,815	3,142,389
HOMEOWNERS ASSISTANCE	166,340				166,340
*** TOTAL ***	1,566,103	1,453,757	1,116,095	329,569	4,465,524

FY 1997 MILITARY CONSTRUCTION TOTAL OBLIGATIONAL AUTHORITY AS REQUESTED

ACTIVE GUARD AND RESERVE FORCES
BY TYPE OF FACILITY
($ THOUSANDS)

DATA AS OF FEB 1995

INSTALLATION	LOCATION	PROJECT	TOTAL
OPERATIONAL FACILITIES			
ARMY			
CONCORD NAVAL WEAPONS STATION	CALIFORNIA	AMMUNITION PIER (DBOF)	20,000
**ARMY			20,000
NAVY			
CAMP PENDLETON MARINE CORPS AIR STATION	CALIFORNIA	AIRCRAFT PARKING APRON	1,590
CAMP PENDLETON MARINE CORPS AIR STATION	CALIFORNIA	RUNWAY IMPROVEMENTS	1,420
NORTH ISLAND NAVAL AIR STATION	CALIFORNIA	DREDGING	22,500
SAN DIEGO NAVAL STATION	CALIFORNIA	PIER UPGRADE	5,900
INGLESIDE NAVAL STATION	TEXAS	MAGNETIC RANGE FACILITY AND LAND ACQ	7,700
NORFOLK NAVAL STATION	VIRGINIA	DEPERMING PIERS	10,000
**NAVY			49,110
AIR FORCE			
ELMENDORF AFB	ALASKA	ADAL SQUADRON OPERATIONS/ AIRCRAFT MAINTEN	14,500
LITTLE ROCK AFB	ARKANSAS	C-130 SQUARDRON OPERATIONS/ACFT MAINTEN.	12,800
LITTLE ROCK AFB	ARKANSAS	CONTROL TOWER	2,400
BEALE AFB	CALIFORNIA	CARS DEPLOYABLE GROUND STATION SUPPORT FAC	7,000
PATRICK AFB	FLORIDA	AIR FREIGHT/PASSENGER TERMINAL BASE OPERAT	8,200
PATRICK AFB	FLORIDA	CONTROL TOWER	2,200
MOODY AFB	GEORGIA	REPAIR AND EXTEND RUNWAY	12,300
ROBINS AFB	GEORGIA	JSTARS ADAL AIRCRAFT APRON/ HYDRANT FUEL S	7,100
ROBINS AFB	GEORGIA	JSTARS SQUADRON OPERATIONS/ AIRCRAFT MAINT	9,100
MOUNTAIN HOME AFB	IDAHO	FLIGHTLINE FIRE STATION	5,000
BARKSDALE AFB	LOUISIANA	COMMUNICATIONS SYSTEMS SQUADRON COMPLEX	2,600
MALSTROM AFB	MONTANA	CONTROL TOWER	2,000
MCGUIRE AFB	NEW JERSEY	SQUADRON OPERATIONS/AIRCRAFT MAINTENANCE U	6,200
SEYMOUR JOHNSON AFB	NORTH CAROLINA	F-15 SQUADRON OPERATIONS/AMU/ ACADEMIC FAC	6,300
GRAND FORKS AFB	NORTH DAKOTA	KC-135 SQUADRON OPERATIONS/ACFT MAINTEN.	6,500
CHARLESTON AFB	SOUTH CAROLINA	C-17 ADD TO AND ALTER APRON/ HYDRANT FUELI	13,200
CHARLESTON AFB	SOUTH CAROLINA	C-17 SQUADRON OPERATIONS/ AIRCRAFT MAINTEN	5,700
SHAW AFB	SOUTH CAROLINA	SECURITY POLICE OPERATIONS	3,760
RANDOLPH AFB	TEXAS	JPATS ADD TO AND ALTER BEDDOWN FACILITIES	2,470
FAIRCHILD AFB	WASHINGTON	KC-135 HYDRANT FUELING SYSTEM	10,900
FAIRCHILD AFB	WASHINGTON	KC-135 SQUADRON OPERATIONS/ AIRCRAFT MAINT	6,300
RAF CROUGHTON	UNITED KINGDOM	FIRE STATION	1,800
OVERSEAS CLASSIFIED	OVERSEAS CLASSIFIED	SPECIAL TACTICAL UNIT DETACHMENT FACILITY	4,226
**AIR FORCE			152,556
SPECIAL OPERATIONS COMMAND			
NAVAL AMPHIBIOUS BASE, CORONADO	CALIFORNIA	ST 1&3 STORAGE FACILITY, CORONADO	8,100
EGLIN AUX FIELD 9	FLORIDA	CLEAR WATER AIRCRAFT RINSE	2,150
PEARL HARBOR	HAWAII	ASDS WATERFRONT OPS FACILITY	11,300
NEW ORLEANS	LOUISIANA	SOF SMALL CRAFT BERTHING	730
CLASSIFIED LOCATION	CONUS CLASSIFIED	AFSOC SQ OPS/AMU	5,000
**SPECIAL OPERATIONS COMMAND			27,280
DEFENSE LEVEL ACTIVITIES			
UNSPECIFIED WORLDWIDE LOCATIONS	WORLDWIDE UNSPECIFIED	ENERGY CONSERVATION IMPROVEMENT PROGRAM	50,000
**DEFENSE LEVEL ACTIVITIES			50,000
NATIONAL SECURITY AGENCY			
FORT MEADE	MARYLAND	FANX III PURCHASE	25,200
**NATIONAL SECURITY AGENCY			25,200

FY 1997 MILITARY CONSTRUCTION TOTAL OBLIGATIONAL AUTHORITY AS REQUESTED

ACTIVE GUARD AND RESERVE FORCES
BY TYPE OF FACILITY
($ THOUSANDS)

DATA AS OF FEB 1995

INSTALLATION	LOCATION	PROJECT	TOTAL
OPERATIONAL FACILITIES			
DEFENSE LOGISTICS AGENCY			
DFSC ELMENDORF AFB	ALASKA	HYDRANT FUEL SYSTEM	17,500
DFSC EL CENTRO NAF	CALIFORNIA	REPLACE HYDRANT FUEL SYSTEM (DBOF)	5,100
DFSC TRAVIS AFB	CALIFORNIA	REPLACE HYDRANT FUEL SYSTEM (DBOF)	16,600
DFSC BARKSDALE AFB	LOUISIANA	JET FUEL OFFLOAD FACILITY (DBOF)	5,000
DFSC ANDREWS AFB	MARYLAND	REPLACE HYDRANT FUEL SYSTEM (DBOF)	11,400
DFSC FALLON NAS	NEVADA	ADDITION TO HOT REFUELING AREA	2,550
DFSC MINOT AFB	NORTH DAKOTA	REPLACE HYDRANT FUEL SYSTEM (DBOF)	9,926
DFSC ALTIS AFB	OKLAHOMA	UPGRADE C-5 HYDRANT SYSTEM PH I (DBOF)	3,250
DFSC SHAW AFB	SOUTH CAROLINA	RAILROAD JET FUEL FACILITY (DBOF)	2,650
DFSC OCEANA NAS	VIRGINIA	JET FUEL STORAGE TANK (DBOF)	900
DEF FUEL SUPPORT POINT GUAM	GUAM	REPLACE POL PIPELINE (DBOF)	18,000
DFSC SIGONELLA NAS	ITALY	EXTEND HYDRANT FUEL SYSTEM (DBOF)	4,200
DFSC MORON AIR BASE	SPAIN	REPLACE HYDRANT FUEL SYSTEM (DBOF)	11,300
**DEFENSE LOGISTICS AGENCY			108,376
AIR NATIONAL GUARD			
ROBINS AFB	GEORGIA	B-1 COMPOSITE SQ OPERATIONS FACILITY	6,429
LINCOLN MAP	NEBRASKA	REMOVE UNDERGROUND FUEL STORAGE TANKS	1,850
FRANCIS S. GABRESKI AIRPORT	NEW YORK	AIRCRAFT WASH AND DEICING FACILITY	630
MANSFIELD LAHM AIRPORT	OHIO	AIRCRAFT DEICING APPRON	490
**AIR NATIONAL GUARD			9,399
** OPERATIONAL FACILITIES			441,921
TRAINING FACILITIES			
ARMY			
FORT LESLEY J MCNAIR	DISTRICT OF COLUMBIA	NATIONAL DEFENSE UNIVERSITY FACILITY	6,900
FT STEWART/HUNTER AAF	GEORGIA	CLOSE COMBAT TACTICAL TRAINING BUILDING	6,000
FORT HOOD	TEXAS	CLOSE COMBAT TACTICAL TRAINING BUILDING II	5,900
**ARMY			18,800
NAVY			
CAMP PENDLETON MARINE CORPS BASE	CALIFORNIA	AUTOMATED FIELD FIRING RANGE	4,968
CAMP LEJEUNE MARINE CORPS BASE	NORTH CAROLINA	TRAINING RANGE FACILITIES	10,000
CHERRY POINT MARINE CORPS AIR STATION	NORTH CAROLINA	SENSITIVE COMPARTMENTED INFORMATION FAC	1,525
QUANTICO MARINE CORPS COMBAT DEV COMMAND	VIRGINIA	BATTLE STAFF TRAINING FACILITY	3,170
**NAVY			19,663
AIR FORCE			
VANDENBERG AFB	CALIFORNIA	COMBAT ARMS FACILITY	1,010
US AIR FORCE ACADEMY	COLORADO	UPGRADE ACADEMIC FACILITY	10,470
MOUNTAIN HOME AFB	IDAHO	IDAHO TRAINING RANGE (SOUTH SITE)	3,000
SEYMOUR JOHNSON AFB	NORTH CAROLINA	F-15 ADD TO SIMULATOR TRAINING SYSTEM SUPP	6,600
WRIGHT-PATTERSON AFB	OHIO	ADD TO AND ALTER ENGINEERING AND RESEARCH	7,500
**AIR FORCE			28,580
ARMY NATIONAL GUARD			
HASTINGS	NEBRASKA	MRF RETS/MPMG	1,250
**ARMY NATIONAL GUARD			1,250
AIR NATIONAL GUARD			
STEWART AIRPORT	NEW YORK	C-5 FLIGHT SIMULATOR FACILITY	3,000

FY 1997 MILITARY CONSTRUCTION TOTAL OBLIGATIONAL AUTHORITY AS REQUESTED

ACTIVE GUARD AND RESERVE FORCES
BY TYPE OF FACILITY
($ THOUSANDS)

DATA AS OF FEB 1995

INSTALLATION	LOCATION	PROJECT	TOTAL
TRAINING FACILITIES			
AIR NATIONAL GUARD			
DOUGLAS MAP	NORTH CAROLINA	AEROMED EVACUATION TRAINING FACILITY	1,950
COVENTRY AGS	RHODE ISLAND	COMMUNICATIONS & ELEC TRAINING FACILITY	2,500
**AIR NATIONAL GUARD			7,450
ARMY RESERVE			
WICHITA	KANSAS	ADD/ALT USARC/OMS/AMSA	8,389
BUFFALO	MINNESOTA	USARC/OMS	4,277
FORT BRAGG	NORTH CAROLINA	ADD/ALT USARC/OMS	10,266
MUSKOGEE	OKLAHOMA	ADD/ALT USARC/OMS	3,125
ST MARY'S	PENNSYLVANIA	ADD/ALT USARC/OMS	1,848
FORT EUSTIS	VIRGINIA	USARC/OMS	10,592
**ARMY RESERVE			38,497
NAVY RESERVE			
NAVAL AIR FACILITY WASHINGTON	DISTRICT OF COLUMBIA	TRAINING BUILDING ADDITION	2,901
MARCORESCEN CAMP WILLIAMS (UNG)	UTAH	RESERVE CENTER	2,500
**NAVY RESERVE			5,401
AIR FORCE RESERVE			
HOMESTEAD AFB	FLORIDA	FIRE TRAINING FACILITY	1,300
ANDREWS AFB	MARYLAND	CONSOLIDATED MEDICAL TRAINING	2,294
NIAGARA FALLS IAP	NEW YORK	FIRE TRAINING SYSTEM	1,600
YOUNGSTOWN MAP	OHIO	FIRE TRAINING SYSTEM	1,500
BILLY MITCHELL FIELD	WISCONSIN	MEDICAL TRAINING FACILITY	2,333
AIR FORCE RESERVE	CONUS CLASSIFIED	K-135 OPERATIONS AND TRAINING FACILITIES	4,980
**AIR FORCE RESERVE			14,007
** TRAINING FACILITIES			133,648
MAINTENANCE & PRODUCTION FACILITIES			
NAVY			
CAMP PENDLETON MARINE CORPS BASE	CALIFORNIA	TACTICAL VEHICLE MAINTENANCE FACILITY	9,580
NORTH ISLAND NAVAL AIR STATION	CALIFORNIA	SHIP MAINTENANCE FACILITY	25,620
NEW RIVER MARINE CORPS AIR STATION	NORTH CAROLINA	AVIATION ARMAMENT SHOPS	4,350
NEW RIVER MARINE CORPS AIR STATION	NORTH CAROLINA	CORROSION CONTROL HANGAR	12,100
NORFOLK NAVAL STATION	VIRGINIA	CONTROLLED INDUSTRIAL FACILITY	16,000
NORFOLK NAVAL STATION	VIRGINIA	SHORE INTERMEDIATE MNT ACT ADDN & UPGRADE	8,700
**NAVY			76,350
AIR FORCE			
EIELSON AFB	ALASKA	CONVENTIONAL MUNITIONS MAINTENANCE SHOP	3,300
DAVIS-MONTHAN AFB	ARIZONA	AIRCRAFT MAINTENANCE FACILITY (DBOF)	4,500
EDWARDS AFB	CALIFORNIA	RENOVATE AIRCRAFT MAINTENANCE FACILITY	8,000
ROBINS AFB	GEORGIA	JSTARS AIRCRAFT MAINTENANCE HANGAR ASSOCIA	1,650
TINKER AFB	OKLAHOMA	CONSOLIDATED VEHICLE MAINTENANCE FACILITY	8,300
CHARLESTON AFB	SOUTH CAROLINA	C-17 ADD TO AND ALTER AIRCRAFT MAINTENANCE	4,600
CHARLESTON AFB	SOUTH CAROLINA	C-17 AIRCRAFT MAINTENANCE FACILITY	5,800
**AIR FORCE			36,150
ARMY BUDGETED BY OOD			
PINE BLUFF ARSENAL	ARKANSAS	AMMUNITION DEMILITARIZATION FAC PHASE III	72,000
PUEBLO DEPOT	COLORADO	AMMUNITION DEMILITARIZATION FAC PHASE I	45,000

FY 1997 MILITARY CONSTRUCTION TOTAL OBLIGATIONAL AUTHORITY AS REQUESTED

ACTIVE GUARD AND RESERVE FORCES
BY TYPE OF FACILITY
($ THOUSANDS)

DATA AS OF FEB 1995

INSTALLATION	LOCATION	PROJECT	TOTAL
MAINTENANCE & PRODUCTION FACILITIES			
ARMY BUDGETED BY DOD			
LEXINGTON - BLUE GRASS DEPOT	KENTUCKY	BLUE GRASS SUPPORT	7,600
UMATILLA DEPOT	OREGON	AMMUNITION DEMILITARIZATION FAC PHASE III	119,000
**ARMY BUDGETED BY DOD			243,600
SPECIAL OPERATIONS COMMAND			
DUKE FIELD	FLORIDA	SOF GENERAL PURPOSE SHOPS	1,500
FORT BRAGG	NORTH CAROLINA	1ST COMPANY OPS COMPLEX	14,400
**SPECIAL OPERATIONS COMMAND			15,900
ARMY NATIONAL GUARD			
BISMARCK	NORTH DAKOTA	AASF/ARMORY COMPLEX EXP	3,650
**ARMY NATIONAL GUARD			3,650
AIR NATIONAL GUARD			
MARCH AFB	CALIFORNIA	ALTER GENERAL PURPOSE AIRCRAFT SHOPS	1,765
ROBINS AFB	GEORGIA	B-1 COMPOSITE AIRCRAFT MAINT. COMPLEX	13,761
GREATER PEORIA AIRPORT	ILLINOIS	FUEL SYSTEMS MAINT & CORROSION CONTRL FAC	3,685
MCCONNELL AFB	KANSAS	B-1 FUEL SYSTEMS MAINTENANCE HANGAR	5,356
MINN-ST PAUL IAP	MINNESOTA	UPGRADE REFUELING VECH SHOP & WASH FAC	360
MCGUIRE AFB	NEW JERSEY	COMPOSITE CE MAINTENANCE FACILITY	3,250
KIRTLAND AFB	NEW MEXICO	MUNITIONS MAINT. & STORAGE COMPLEX	2,900
SALT LAKE CITY IAP	UTAH	VEHICLE WASHING FACILITY	460
RICHARD E BYRD IAP	VIRGINIA	VEHICLE MAINTENANCE COMPLEX	1,550
SITE 1	CONUS UNSPECIFIED	UPGRADE MAINTENANCE HANGAR	4,000
PUERTO RICO IAP	PUERTO RICO	REFUELING VEHICLE SHOP & PAINT BAY	460
**AIR NATIONAL GUARD			37,547
AIR FORCE RESERVE			
MAXWELL AFB	ALABAMA	AIRCRAFT MAINTENANCE HANGAR	5,460
PETERSON AFB	COLORADO	COMPOSITE MAINTENANCE FACILITY	3,150
**AIR FORCE RESERVE			8,610
** MAINTENANCE & PRODUCTION FACILITIES			421,807
R&D FACILITIES			
AIR FORCE			
EDWARDS AFB	CALIFORNIA	ADD TO AND ALTER ANECHOIC CHAMBER	4,900
EDWARDS AFB	CALIFORNIA	F-22 ALTER AIRCRAFT MAINTENANCE FACILITY	4,400
WRIGHT-PATTERSON AFB	OHIO	RENOVATE ACQUISITION MANAGEMENT FACILITY,	9,900
**AIR FORCE			19,200
BALLISTIC MISSILE DEFENSE ORAGNIZATION			
MISSILE RANGE	KWAJALEIN	THAAD GBR TMD TEST FACILITIES	4,700
**BALLISTIC MISSILE DEFENSE ORAGNIZATION			4,700
** R&D FACILITIES			23,900
SUPPLY FACILITIES			
ARMY			
VARIOUS LOCATIONS	OVERSEAS VARIOUS	STRATEGIC LOGISTICAL PREPO COMPLEX PH II	64,000
**ARMY			64,000

FY 1997 MILITARY CONSTRUCTION TOTAL OBLIGATIONAL AUTHORITY AS REQUESTED

ACTIVE GUARD AND RESERVE FORCES
BY TYPE OF FACILITY
($ THOUSANDS)

DATA AS OF FEB 1995

INSTALLATION	LOCATION	PROJECT	TOTAL
SUPPLY FACILITIES			
NAVY			
QUANTICO MARINE CORPS COMBAT DEV COMMAND	VIRGINIA	AMMUNITION STORAGE MAGAZINES (PHASE II)	2,000
**NAVY			2,000
AIR FORCE			
BUCKLEY ANG BASE	COLORADO	BASE SUPPLY AND EQUIPMENT WAREHOUSE	3,500
SHEPPARD AFB	TEXAS	CONSOLIDATED LOGISTICS COMPLEX	9,700
OVERSEAS CLASSIFIED	OVERSEAS CLASSIFIED	MUNITIONS STORAGE IGLOOS	7,000
OVERSEAS CLASSIFIED	OVERSEAS CLASSIFIED	WAR READINESS MATERIAL WAREHOUSE	2,300
OVERSEAS CLASSIFIED	OVERSEAS CLASSIFIED	WAR READINESS MATERIAL WAREHOUSES	6,000
**AIR FORCE			28,500
SPECIAL OPERATIONS COMMAND			
FORT CAMPBELL	KENTUCKY	SUPPLY SUPPORT ACTIVITY, FT CAMPBELL	3,500
**SPECIAL OPERATIONS COMMAND			3,500
DEFENSE LOGISTICS AGENCY			
DEF DISTRIBUTION SAN DIEGO - DDDC	CALIFORNIA	REPLACE GENERAL PURPOSE WHSE (DBOF)	13,000
DEF REUTILIZATION & MARKETING SCOTT AFB	ILLINOIS	DRMO CONSOLIDATION (DBOF)	7,500
DFSC MCCONNELL AFB	KANSAS	ADD/ALTER JET FUEL STORAGE FACILITY(DBOF)	1,700
DFSC WESTOVER AFB	MASSACHUSETTS	JET FUEL STORAGE COMPLEX (DBOF)	2,750
DEF REUTILIZATION & MARKETING SPARTA	WISCONSIN	DRMO CONSOLIDATION (DBOF)	6,500
DFSC TRUAX FIELD	WISCONSIN	JET FUEL STORAGE COMPLEX (DBOF)	3,750
**DEFENSE LOGISTICS AGENCY			35,200
AIR NATIONAL GUARD			
DANNELLY FIELD	ALABAMA	UPGRADE BASE SUPPLY & BASE ENGINEER FAC	2,700
SEPULVEDA ANG ANNEX	CALIFORNIA	SUPPLY & CIVIL ENGINEER FACILITY	1,800
ROBINS AFB	GEORGIA	B-1 MUNITIONS MAINT & TRAINING COMPLEX	3,000
VOLK FIELD	WISCONSIN	MUNITIONS STORAGE IGLOOS	700
**AIR NATIONAL GUARD			8,200
ARMY RESERVE			
GENEVA	PENNSYLVANIA	ECS/AMSA/WAREHOUSE	9,382
**ARMY RESERVE			9,382
** SUPPLY FACILITIES			150,782
HOSPITAL AND MEDICAL FACILITIES			
DEFENSE MEDICAL SUPPORT ACTIVITY			
CAMP PENDLETON MARINE CORPS BASE	CALIFORNIA	BRANCH MEDICAL CLINIC (EDSON RANGE)	3,000
NAVAL AIR STATION LEMOORE	CALIFORNIA	HOSPITAL REPLACEMENT	37,000
KEY WEST NAVAL AIR STATION	FLORIDA	MEDICAL/DENTAL CLINIC REPLACEMENT	10,800
ANDREWS AIR FORCE BASE	MARYLAND	LIFE SAFETY/EMERGENCY ROOM UPGRADE	16,940
FORT BRAGG	NORTH CAROLINA	CONS TROOP MED CLINIC (SMOKE BOMB HILL)	11,800
FORT BRAGG	NORTH CAROLINA	HEALTH/DENTAL CLINIC (COSCOM)	13,200
FORT BRAGG	NORTH CAROLINA	#HOSPITAL REPLACEMENT PHASE IV	89,000
FORT BLISS	TEXAS	LIFE SAFETY UPGRADE	4,950
ASU BAHRAIN	BAHRAIN ISLAND	MEDICAL/DENTAL CLINIC	4,600
**DEFENSE MEDICAL SUPPORT ACTIVITY			191,290
AUTHORIZED IN PRIOR YEAR			(89,000)
ADMINSTRATIVE FACILITIES			
AIR FORCE			
KELLY AFB	TEXAS	WING SUPPORT FACILITY (DBOF)	3,380

AUTHORIZED IN PRIOR YEAR

FY 1997 MILITARY CONSTRUCTION TOTAL OBLIGATIONAL AUTHORITY AS REQUESTED

ACTIVE GUARD AND RESERVE FORCES
BY TYPE OF FACILITY
($ THOUSANDS)

DATA AS OF FEB 1995

INSTALLATION	LOCATION	PROJECT	TOTAL
ADMINSTRATIVE FACILITIES			
AIR FORCE			
LANGLEY AFB	VIRGINIA	ADD TO AND ALTER HQ AIR COMBAT COMMAND FAC	4,600
**AIR FORCE			7,980
DEFENSE FINANCE AND ACCOUNTING SERVICE			
OAKLAND NAVAL SUPPLY	CALIFORNIA	RENOVATE EXISTING FAC FOR ADMIN USE(DBOF)	17,575
ORLANDO NTC	FLORIDA	RENOVATE EXISTING FAC FOR ADMIN USE(DBOF)	4,300
ROCK ISLAND ARSENAL	ILLINOIS	RENOVATE EXISTING FAC FOR ADMIN USE(DBOF)	13,800
LORING AFB	MAINE	RENOVATE EXISTING FAC FOR ADMIN USE(DBOF)	9,200
OFFUTT AFB	NEBRASKA	RENOVATE EXISTING FAC FOR ADMIN USE(DBOF)	7,400
GRIFFISS AFB	NEW YORK	RENOVATE EXISTING FAC FOR ADMIN USE(DBOF)	12,600
FORT SILL	OKLAHOMA	RENOVATE EXISTING FAC FOR ADMIN USE(DBOF)	12,800
CHARLESTON	SOUTH CAROLINA	RENOVATE EXISTING FAC FOR ADMIN USE(DBOF)	5,900
**DEFENSE FINANCE AND ACCOUNTING SERVICE			83,575
DEFENSE LOGISTICS AGENCY			
DEFENSE GENERAL SUPPLY CENTER	VIRGINIA	CONVERT WHSE TO ADMIN SPACE (DBOF)	7,600
**DEFENSE LOGISTICS AGENCY			7,600
** ADMINSTRATIVE FACILITIES			99,155
TROOP HOUSING FACILITIES			
ARMY			
FORT CARSON	COLORADO	WHOLE BARRACK COMPLEX RENEWAL	37,000
SCHOFIELD BARRACKS	HAWAII	WHOLE BARRACK COMPLEX RENEWAL	35,000
FORT LEAVENWORTH	KANSAS	US DISCIPLINARY BARRACKS	58,900
FORT HOOD	TEXAS	WHOLE BARRACK COMPLEX RENEWAL	50,000
FORT EUSTIS	VIRGINIA	WHOLE BARRACK COMPLEX RENEWAL	12,000
FORT LEWIS	WASHINGTON	WHOLE BRIGADE COMPLEX RENEWAL	75,000
COMBINED FIELD ARMY	KOREA	WHOLE BARRACKS COMPLEX RENEWAL	14,000
EASTERN CORRIDOR	KOREA	WHOLE BARRACKS COMPLEX RENEWAL	16,000
**ARMY			297,900
NAVY			
CAMP PENDLETON MARINE CORPS BASE	CALIFORNIA	BACHELOR ENLISTED QUARTERS	9,570
PORT HUENEME NAVAL CONSTR BATTALION CTR	CALIFORNIA	BACHELOR ENLISTED QUARTERS	12,800
SAN CLEMENTE ISLAND NAVAL FACILITY	CALIFORNIA	BACHELOR ENLISTED QUARTERS AND MESSHALL	13,000
SAN DIEGO NAVAL STATION	CALIFORNIA	BACHELOR ENLISTED QUARTERS	33,500
NEW LONDON NAVAL SUBMARINE BASE	CONNECTICUT	BACHELOR ENLISTED QUARTERS	10,700
JACKSONVILLE NAVAL AIR STATION	FLORIDA	BACHELOR ENLISTED QUARTERS	12,500
PEARL HARBOR NAVAL STATION	HAWAII	BACHELOR ENLISTED QUARTERS MODERNIZATION	15,500
CAMP LEJEUNE MARINE CORPS BASE	NORTH CAROLINA	BACHELOR ENLISTED QUARTERS	18,150
NORFOLK NAVAL STATION	VIRGINIA	BACHELOR ENLISTED QUARTERS	6,000
NORFOLK NAVAL STATION	VIRGINIA	BACHELOR ENLISTED QUARTERS	18,000
WHIDBEY ISLAND NAVAL AIR STATION	WASHINGTON	BACHELOR ENLISTED QUARTERS	4,500
ROOSEVELT ROADS NAVAL STATION	PUERTO RICO	BACHELOR ENLISTED QUARTERS	18,490
**NAVY			172,710
AIR FORCE			
TRAVIS AFB	CALIFORNIA	DORMITORY	6,600
FALCON AFS	COLORADO	ALTER DINING FACILITY/SAFETY UPGRADE	1,700
EGLIN AFB	FLORIDA	UPGRADE DORMITORY	7,300
EGLIN AFB AUXILIARY FIELD 9	FLORIDA	TRANSIENT QUARTERS	7,098
ROBINS AFB	GEORGIA	JSTARS ADD TO AND ALTER DINING FACILITY	4,450

FY 1997 MILITARY CONSTRUCTION TOTAL OBLIGATIONAL AUTHORITY AS REQUESTED

ACTIVE GUARD AND RESERVE FORCES
BY TYPE OF FACILITY
($ THOUSANDS)

DATA AS OF FEB 1995

INSTALLATION	LOCATION	PROJECT	TOTAL
TROOP HOUSING FACILITIES			
AIR FORCE			
HICKAM AFB	HAWAII	ALTER TRANSIENT DORMITORY	3,150
ANDREWS AFB	MARYLAND	ALTER DORMITORIES	8,700
POPE AFB	NORTH CAROLINA	DORMITORY	4,500
CHARLESTON AFB	SOUTH CAROLINA	ADD TO AND ALTER DORMITORIES	5,800
DYESS AFB	TEXAS	ADD TO AND ALTER DORMITORIES	5,400
DYESS AFB	TEXAS	CONSOLIDATED DINING FACILITY	5,100
LACKLAND AFB	TEXAS	UPGRADE RECRUIT DORMITORY	5,100
MCCHORD AFB	WASHINGTON	ALTER DORMITORIES	5,400
RAF LAKENHEATH	UNITED KINGDOM	DORMITORY	3,800
RAF MILDENHALL	UNITED KINGDOM	DORMITORY	6,400
**AIR FORCE			80,498
NAVY RESERVE			
NAVAL AIR STATION NEW ORLEANS	LOUISIANA	BEQ ADDITION	3,570
**NAVY RESERVE			3,570
** TROOP HOUSING FACILITIES			554,678
COMMUNITY FACILITIES			
NAVY			
CAMP PENDLETON MARINE CORPS BASE	CALIFORNIA	PHYSICAL FITNESS CENTER	4,000
TWENTYNINE PALMS MARCORP AIR-GRND COMB CTR	CALIFORNIA	CHILD DEVELOPMENT CENTER	4,100
CAMP LEJEUNE MARINE CORPS BASE	NORTH CAROLINA	PHYSICAL FITNESS CENTER	2,400
ST MAWGAN JOINT MARITIME COMMUNICATION CTR	UNITED KINGDOM	PHYSICAL FITNESS CTR ADDN AND ALTERATIONS	4,930
**NAVY			15,430
AIR FORCE			
ROBINS AFB	GEORGIA	JSTARS CHILD DEVELOPMENT CENTER	3,550
ALTUS AFB	OKLAHOMA	CHILD DEVELOPMENT CENTER COMPLEX	4,000
INCIRLIK AB	TURKEY	ADD TO AND ALTER PHYSICAL FITNESS CENTER	1,800
**AIR FORCE			9,350
AIR NATIONAL GUARD			
WILL ROGERS WORLD AIRPORT	OKLAHOMA	ADD TO & ALTER SECURITY POLICE FACILITY	500
**AIR NATIONAL GUARD			500
** COMMUNITY FACILITIES			25,280
UTILITY FACILITIES			
ARMY			
FORT LEWIS	WASHINGTON	TANK TRAIL EROSION MITIGATION-YAKIMA	2,000
**ARMY			2,000
NAVY			
CAMP PENDLETON MARINE CORPS AIR STATION	CALIFORNIA	TRANSPORTATION INFRASTRUCTURE	5,460
**NAVY			5,460
AIR FORCE			
EIELSON AFB	ALASKA	REPAIR UTILIDOR PIPE	2,173
TINKER AFB	OKLAHOMA	B-2 ADD TO HANGAR FIRE PROTECTION SYSTEM	5,400

FY 1997 MILITARY CONSTRUCTION TOTAL OBLIGATIONAL AUTHORITY AS REQUESTED

ACTIVE GUARD AND RESERVE FORCES
BY TYPE OF FACILITY
($ THOUSANDS)

DATA AS OF FEB 1995

INSTALLATION	LOCATION	PROJECT	TOTAL
UTILITY FACILITIES			
AIR FORCE			
KELLY AFB	TEXAS	UPGRADE STORM DRAINAGE SYSTEM (DBOF)	2,200
SPANGDAHLEM AB	GERMANY	ADD TO AND ALTER WATER STORAGE AND DISTRIB	3,400
RAF LAKENHEATH	UNITED KINGDOM	ADD TO AND ALTER WATER DISTRIBUTION MAINS	4,150
**AIR FORCE			17,323
DEFENSE LEVEL ACTIVITIES			
OSD MILCON	CONUS CLASSIFIED	CLASSIFIED LOCATION	25,500
UNSPECIFIED WORLDWIDE LOCATIONS	WORLDWIDE UNSPECIFIED	CONTINGENCY CONSTRUCTION	6,766
**DEFENSE LEVEL ACTIVITIES			32,266
NATIONAL SECURITY AGENCY			
MENWITH HILL STATION	UNITED KINGDOM	UPGRADE POWER AVAILABILITY	613
**NATIONAL SECURITY AGENCY			613
DEF INTELLIGENCE AGENCY			
BOLLING AFB	DISTRICT OF COLUMBIA	RECONFIGURATION DIAC	6,966
**DEF INTELLIGENCE AGENCY			6,966
DEFENSE LOGISTICS AGENCY			
DEFENSE CONSTRUCTION SUPPLY CENTER	OHIO	CONSTRUCT ENTRANCE GATE (DBOF)	800
**DEFENSE LOGISTICS AGENCY			800
AIR NATIONAL GUARD			
CHANNEL ISLANDS ANGB	CALIFORNIA	UPGRADE DRAINAGE SYSTEMS	1,000
BUCKLEY ANGB	COLORADO	UPGRADE SANITARY SEWER SYSTEM	310
JACKSONVILLE IAP	FLORIDA	UPGRADE HEATING PLANTS AND CHILLERS	680
FT WAYNE MAP	INDIANA	UPGRADE DRAINAGE SYSTEM	500
BARNES MAP	MASSACHUSETTS	UPGRADE HEATING DISTRIBUTION SYSTEM	740
SELFRIDGE ANGB	MICHIGAN	UPGRADE HEATING SYSTEMS	3,600
VOLK FIELD	WISCONSIN	UPGRADE SANITARY SEWER SYSTEM	320
**AIR NATIONAL GUARD			7,150
AIR FORCE RESERVE			
BILLY MITCHELL FIELD	WISCONSIN	IMPROVE STORM DRAINAGE SYSTEM	950
**AIR FORCE RESERVE			950
** UTILITY FACILITIES			73,528
REAL ESTATE			
AIR FORCE			
KING SALMON AIRPORT	ALASKA	LAND ACQUISITION	900
**AIR FORCE			900
AIR NATIONAL GUARD			
ROBINS AFB	GEORGIA	B-1 SITE IMPROVEMENTS ROADS & UTILITIES	6,300
**AIR NATIONAL GUARD			6,300
** REAL ESTATE			7,200
SUPPORTING ACTIVITIES			
NAVY			
UNSPECIFIED WORLDWIDE LOCATIONS	WORLDWIDE UNSPECIFIED	ACCESS ROADS	500
**NAVY			500

FY 1997 MILITARY CONSTRUCTION TOTAL OBLIGATIONAL AUTHORITY AS REQUESTED

ACTIVE GUARD AND RESERVE FORCES
BY TYPE OF FACILITY
($ THOUSANDS)

DATA AS OF FEB 1995

INSTALLATION	LOCATION	PROJECT	TOTAL
AIR POLLUTION ABATEMENT			
AIR FORCE			
EDWARDS AFB	CALIFORNIA	CONVERT BOILERS	4,400
ARNOLD ENGINEERING DEV CENTER	TENNESSEE	UPGRADE ENGINE TEST FACILITIES REFRIGERATI	3,800
**AIR FORCE			8,200
WATER POLLUTION ABATEMENT			
NAVY			
SAN DIEGO NAVAL STATION	CALIFORNIA	OILY WASTE COLLLECTION FACILITY	25,390
PEARL HARBOR NAVY PUBLIC WORKS CENTER	HAWAII	SEWER OUTFALL EXTENSION	25,140
PATUXENT RIVER NAVAL AIR STATION	MARYLAND	WASTEWATER TREATMENT PLANT UPGRADE	2,500
CAMP LEJEUNE MARINE CORPS BASE	NORTH CAROLINA	WASTEWATER TREATMENT PLANT (PHASE III)	3,300
QUANTICO MARINE CORPS COMBAT DEV COMMAND	VIRGINIA	SANITARY LANDFILL	9,120
**NAVY			65,450
AIR FORCE			
ELMENDORF AFB	ALASKA	UPGRADE STORM DRAINAGE SYSTEM	2,100
LITTLE ROCK AFB	ARKANSAS	INDUSTRIAL WASTEWATER PRETREATMENT FAC	1,200
BEALE AFB	CALIFORNIA	INDUSTRIAL WASTEWATER PRETREATMENT FACILIT	1,500
BEALE AFB	CALIFORNIA	LANDFILL CLOSURE	5,000
CHEYENNE MT COMPLEX AFB	COLORADO	DIESEL FUEL RESERVOIR	3,150
EGLIN AFB	FLORIDA	UPGRADE STORM DRAINAGE SYSTEM	1,200
MOODY AFB	GEORGIA	INDUSTRIAL WASTEWATER PRETREATMENT FACILIT	1,000
BARKSDALE AFB	LOUISIANA	INDUSTRIAL WASTEWATER PRETREATMENT FACILIT	1,000
WHITEMAN AFB	MISSOURI	INDUSTRIAL WASTEWATER PRETREATMENT FACILIT	1,200
OFFUTT AFB	NEBRASKA	INDUSTRIAL WASTEWATER PRETREATMENT FACILIT	1,200
NELLIS AFB	NEVADA	INDUSTRIAL WASTEWATER PRETREATMENT FACILIT	1,350
KIRTLAND AFB	NEW MEXICO	ADD TO SANITARY SEWER SYSTEM	1,500
POPE AFB	NORTH CAROLINA	INDUSTRIAL WASTEWATER PRETREATMENT FACILIT	1,000
POPE AFB	NORTH CAROLINA	UPGRADE SANITARY SEWER SYSTEM	2,150
WRIGHT-PATTERSON AFB	OHIO	UPGRADE STORM DRAINAGE SYSTEM	2,000
TINKER AFB	OKLAHOMA	UPGRADE STORM DRAINAGE SYSTEM	2,880
SHAW AFB	SOUTH CAROLINA	INDUSTRIAL WASTEWATER PRETREATMENT FACILIT	1,000
SHAW AFB	SOUTH CAROLINA	UPGRADE SANITARY SEWER SYSTEM	2,750
ELLSWORTH AFB	SOUTH DAKOTA	INDUSTRIAL WASTEWATER PRETREATMENT FACILIT	1,350
ELLSWORTH AFB	SOUTH DAKOTA	UNDERGROUND FUEL STORAGE TANKS	2,050
DYESS AFB	TEXAS	INDUSTRIAL WASTEWATER PRETREATMENT FACILIT	1,150
LANGLEY AFB	VIRGINIA	INDUSTRIAL WASTEWATER PRETREATMENT FACILIT	1,000
LANGLEY AFB	VIRGINIA	UPGRADE SANITARY SEWER SYSTEM	2,840
FAIRCHILD AFB	WASHINGTON	UNDERGROUND FUEL STORAGE TANKS	1,100
THULE AB	GREENLAND	SOLID WASTE DISPOSAL FACILITIES	5,300
**AIR FORCE			47,970
** WATER POLLUTION ABATEMENT			113,420
UNSPECIFIED MINOR CONSTRUCTION			
ARMY	WORLDWIDE UNSPECIFIED		5,000
NAVY	WORLDWIDE UNSPECIFIED		7,400
AIR FORCE	WORLDWIDE UNSPECIFIED		9,328
SPECIAL OPERATIONS COMMAND	WORLDWIDE UNSPECIFIED		1,700
BALLISTIC MISSILE DEFENSE ORAGNIZATION	WORLDWIDE UNSPECIFIED		2,040
DEFENSE LEVEL ACTIVITIES	WORLDWIDE UNSPECIFIED		3,200
JOINT CHIEFS OF STAFF	WORLDWIDE UNSPECIFIED		6,384
DOD DEPENDENT SCHOOLS	WORLDWIDE UNSPECIFIED		2,000
DEFENSE MEDICAL SUPPORT ACTIVITY	WORLDWIDE UNSPECIFIED		6,200
ARMY NATIONAL GUARD	WORLDWIDE UNSPECIFIED		5,500

FY 1997 MILITARY CONSTRUCTION TOTAL OBLIGATIONAL AUTHORITY AS REQUESTED

ACTIVE GUARD AND RESERVE FORCES
BY TYPE OF FACILITY
($ THOUSANDS)

DATA AS OF FEB 1995

INSTALLATION	LOCATION	PROJECT	TOTAL
UNSPECIFIED MINOR CONSTRUCTION			
AIR NATIONAL GUARD			
AIR NATIONAL GUARD	WORLDWIDE UNSPECIFIED		4,100
ARMY RESERVE	WORLDWIDE UNSPECIFIED		3,800
AIR FORCE RESERVE	WORLDWIDE UNSPECIFIED		4,326
** UNSPECIFIED MINOR CONSTRUCTION			60,978
PLANNING & DESIGN			
ARMY	WORLDWIDE UNSPECIFIED		20,000
ARMY	WORLDWIDE UNSPECIFIED		64,382
NAVY	WORLDWIDE UNSPECIFIED		46,410
AIR FORCE	WORLDWIDE UNSPECIFIED		32,417
ARMY BUDGETED BY DOD	WORLDWIDE UNSPECIFIED		8,700
SPECIAL OPERATIONS COMMAND	WORLDWIDE UNSPECIFIED		6,591
DEFENSE FINANCE AND ACCOUNTING SERVICE	WORLDWIDE UNSPECIFIED		3,100
BALLISTIC MISSILE DEFENSE ORAGNIZATION	WORLDWIDE UNSPECIFIED		1,895
DEFENSE LEVEL ACTIVITIES	WORLDWIDE UNSPECIFIED		11,000
DEFENSE LOGISTICS AGENCY	WORLDWIDE UNSPECIFIED		5,900
DEFENSE MEDICAL SUPPORT ACTIVITY	WORLDWIDE UNSPECIFIED		27,700
ARMY NATIONAL GUARD	WORLDWIDE UNSPECIFIED		3,900
AIR NATIONAL GUARD	WORLDWIDE UNSPECIFIED		4,725
ARMY RESERVE	WORLDWIDE UNSPECIFIED		3,480
NAVY RESERVE	WORLDWIDE UNSPECIFIED		111
AIR FORCE RESERVE	WORLDWIDE UNSPECIFIED		2,400
** PLANNING & DESIGN			242,711
BASE REALIGNMENT & CLOSURE ACCT PART II			
DEFENSE LEVEL ACTIVITIES			
BASE REALIGNMENT & CLOSURE ACCT PART II	WORLDWIDE UNSPECIFIED	BASE REALIGNMENT & CLOSURE PART II	255,957
**DEFENSE LEVEL ACTIVITIES			255,957
BASE REALIGNMENT & CLOSURE ACCT PART III			
DEFENSE LEVEL ACTIVITIES			
BASE REALIGNMENT & CLOSURE ACCT PART III	WORLDWIDE UNSPECIFIED	BASE REALIGNMENT & CLOSURE ACCT PART III	1,291,764
**DEFENSE LEVEL ACTIVITIES			1,291,764
BASE REALIGNMENT & CLOSURE ACCT PART IV			
DEFENSE LEVEL ACTIVITIES			
BASE REALIGNMENT & CLOSURE ACCT PART IV	WORLDWIDE UNSPECIFIED	BASE REALIGNMENT & CLOSURE ACCT PART IV	824,200
**DEFENSE LEVEL ACTIVITIES			824,200
NATO INFRASTRUCTURE			
DEFENSE LEVEL ACTIVITIES			
OSD MILCON	WORLDWIDE UNSPECIFIED	NATO INFRASTRUCTURE	199,000
**DEFENSE LEVEL ACTIVITIES			199,000

FY 1997 MILITARY CONSTRUCTION TOTAL OBLIGATIONAL AUTHORITY AS REQUESTED

ACTIVE GUARD AND RESERVE FORCES
BY TYPE OF FACILITY
($ THOUSANDS)

DATA AS OF FEB 1995

INSTALLATION	LOCATION	PROJECT	TOTAL
TOTALS			
ARMY			561,541
NAVY			469,565
AIR FORCE			594,616
DEFENSE AGENCIES			3,494,197
AUTHORIZED IN PRIOR YEAR			(89,000)
*** TOTAL ***			5,119,919
AUTHORIZED IN PRIOR YEAR			(89,000)

FY 1997 FAMILY HOUSING TOTAL OBLIGATIONAL AUTHORITY AS REQUESTED

BY TYPE OF FACILITY
($ THOUSANDS)

DATA AS OF FEB 1995

INSTALLATION	LOCATION	PROJECT	TOTAL
FAMILY HOUSING, ARMY			
REDSTONE ARSENAL	ALABAMA	FAMILY HOUSING REPLACEMENT CONST (118)	12,000
FORT CARSON	COLORADO	FAMILY HOUSING REPLACEMENT CONST (148)	19,000
SCHOFIELD BARRACKS	HAWAII	FAMILY HOUSING REPLACEMENT CONST (190)	30,000
FORT KNOX	KENTUCKY	FAMILY HOUSING REPLACEMENT CONST (150)	18,500
FORT HOOD	TEXAS	FAMILY HOUSING REPLACEMENT CONST (150)	19,500
VARIOUS WORLDWIDE LOCATIONS	WORLDWIDE UNSPECIFIED	FAMILY HOUSING CONSTRUCTION (5)	1,000
		CONSTRUCTION IMPROVEMENTS	66,570
		PLANNING	5,343
		FURNISHINGS ACCOUNT	49,985
		MANAGEMENT ACCOUNT	86,401
		MISCELLANEOUS ACCOUNT	1,273
		SERVICES ACCOUNT	54,246
		UTILITIES ACCOUNT	274,890
		LEASING	249,930
		MAINTENANCE OF REAL PROPERTY	511,114
		INTEREST PAYMENTS	11
TOTAL FAMILY HOUSING, ARMY			1,399,763
FAMILY HOUSING, NAVY			
MCAS YUMA	ARIZONA	COMMUNITY CENTER	747
LEMOORE NAVAL AIR STATION	CALIFORNIA	276 UNITS REPLACEMENT	41,522
MARCOR AIR-GRND COMB CTR TWENTYNINE PALMS	CALIFORNIA	COMMUNITY CENTER	2,180
MARCOR AIR-GRND COMB CTR TWENTYNINE PALMS	CALIFORNIA	HOUSING OFFICE	1,500
MARINE CORPS BASE CAMP PENDLETON	CALIFORNIA	133 UNITS NEW CONSTRUCTION	20,000
PUBLIC WORKS CENTER SAN DIEGO	CALIFORNIA	366 UNITS REPLACEMENT	52,352
MARINE CORPS AIR STATION, KANEOHE BAY	HAWAII	54 UNITS NEW CONSTRUCTION	11,920
NAVAL COMPLEX, OAHU	HAWAII	300 UNITS REPLACEMENT	54,810
NAVAL AIR TEST CENTER PATUXENT RIVER	MARYLAND	COMMUNITY CENTER	1,285
MARINE CORPS BASE CAMP LEJEUNE	NORTH CAROLINA	COMMUNITY CENTER	870
AEGIS CSC WALLOPS ISLAND VA	VIRGINIA	20 UNITS NEW CONST	3,460
NSGA NORTHWEST VA	VIRGINIA	HOUSING OFFICE/SELF HELP/COMM CNTR	1,130
NAVAL STATION PUGET SOUND, EVERETT	WASHINGTON	100 UNITS NEW CONSTRUCTION	15,650
NAVAL SUBMARINE BASE BANGOR	WASHINGTON	HSG OFFICE	1,150
		CONSTRUCTION IMPROVEMENTS	190,819
		PLANNING	27,674
		FURNISHINGS ACCOUNT	35,067
		MANAGEMENT ACCOUNT	98,066
		MISCELLANEOUS ACCOUNT	1,290
		SERVICES ACCOUNT	66,551
		UTILITIES ACCOUNT	189,839
		LEASING	114,710
		MAINTENANCE OF REAL PROPERTY	521,085
		MORTGAGE INSURANCE PREMIUMS	80
TOTAL FAMILY HOUSING, NAVY			1,453,757
FAMILY HOUSING, AIR FORCE			
EIELSON AFB	ALASKA	CONSTRUCT FIRE STATION	2,950
EIELSON AFB	ALASKA	REPLACE 72 MILITARY FAMILY HOUSING UNITS	22,029
BEALE AFB	CALIFORNIA	REPLACE MILITARY FAMILY HOUSING, PHASE 2	9,649
EDWARDS AFB	CALIFORNIA	REPLACE 60 MILITARY FAMILY HOUSING UNITS,	9,413
TRAVIS AFB	CALIFORNIA	REPLACE 70 MILITARY FAMILY HOUSING UNITS	8,631
VANDENBERG AFB	CALIFORNIA	REPLACE 138 MILITARY FAMILY HOUSING UNITS	19,499
BOLLING AFB	DISTRICT OF COLUMBIA	REPLACE 40 MILITARY FAMILY HOUSING UNITS	5,000
MACDILL AFB	FLORIDA	REPLACE 70 MILITARY FAMILY HOUSING UNITS	8,959
PATRICK AFB	FLORIDA	REPLACE 35 MILITARY FAMILY HOUSING UNITS,	3,103
ROBINS AFB	GEORGIA	REPLACE 60 MILITARY FAMILY HOUSING UNITS,	5,763

FY 1997 FAMILY HOUSING TOTAL OBLIGATIONAL AUTHORITY AS REQUESTED

BY TYPE OF FACILITY
($ THOUSANDS)

DATA AS OF FEB 1995

INSTALLATION	LOCATION	PROJECT	TOTAL
FAMILY HOUSING, AIR FORCE			
BARKSDALE AFB	LOUISIANA	REPLACE 108 MILITARY FAMILY HOUSING UNITS,	10,092
HANSCOM AFB	MASSACHUSETTS	REPLACE 32 MILITARY FAMILY HOUSING UNITS,	4,875
KEESLER AFB	MISSISSIPPI	REPLACE 76 MILITARY FAMILY HOUSING UNITS	6,500
WHITEMAN AFB	MISSOURI	CONSTRUCT 76 MILITARY FAMILY HOUSING UNITS	9,451
OFFUTT AFB	NEBRASKA	HOUSING MAINTENANCE FACILITY	874
OFFUTT AFB	NEBRASKA	HOUSING MANAGEMENT FACILITY	845
KIRTLAND AFB	NEW MEXICO	REPLACE 60 MILITARY FAMILY HOUSING UNITS,	6,339
GRAND FORKS AFB	NORTH DAKOTA	REPLACE 64 MILITARY FAMILY HOUSING UNITS	9,225
MINOT AFB	NORTH DAKOTA	REPLACE 64 MILITARY FAMILY HOUSING UNITS	10,175
LACKLAND AFB	TEXAS	REPLACE FAMILY HOUSING MAINTENANCE FACILIT	350
LACKLAND AFB	TEXAS	REPLACE FAMILY HOUSING MANAGEMENT OFFICE	450
MCCHORD AFB	WASHINGTON	REPLACE 50 MILITARY FAMILY HOUSING UNITS	7,359
		CONSTRUCTION IMPROVEMENTS	87,817
		PLANNING	9,590
		FURNISHINGS ACCOUNT	43,278
		MANAGEMENT ACCOUNT	45,454
		MISCELLANEOUS ACCOUNT	5,711
		SERVICES ACCOUNT	33,412
		UTILITIES ACCOUNT	196,957
		LEASING	118,048
		MAINTENANCE OF REAL PROPERTY	414,267
		MORTGAGE INSURANCE PREMIUMS	30
TOTAL FAMILY HOUSING, AIR FORCE			1,116,095
FAMILY HOUSING, DEFENSE LEVEL ACTIVITIES			
		CONSTRUCTION IMPROVEMENTS	294,900
TOTAL FAMILY HOUSING, ASDA			294,900
FAMILY HOUSING, NATIONAL SECURITY AGENCY			
		CONSTRUCTION IMPROVEMENTS	50
		FURNISHINGS ACCOUNT	884
		MANAGEMENT ACCOUNT	70
		MISCELLANEOUS ACCOUNT	35
		SERVICES ACCOUNT	355
		UTILITIES ACCOUNT	400
		LEASING	11,374
		MAINTENANCE OF REAL PROPERTY	224
TOTAL FAMILY HOUSING, NSA			13,392
FAMILY HOUSING, DEF INTELLIGENCE AGENCY			
		FURNISHINGS ACCOUNT	2,327
		LEASING	14,079
TOTAL FAMILY HOUSING, DIA			16,406
FAMILY HOUSING, DEFENSE LOGISTICS AGENCY			
		CONSTRUCTION IMPROVEMENTS	3,804
		FURNISHINGS ACCOUNT	25
		MANAGEMENT ACCOUNT	166
		SERVICES ACCOUNT	32
		UTILITIES ACCOUNT	340
		MAINTENANCE OF REAL PROPERTY	504
TOTAL FAMILY HOUSING, DLA			4,871
GRAND TOTAL FAMILY HOUSING, DEFENSE AGENCIES			329,569

FY 1997 FAMILY HOUSING TOTAL OBLIGATIONAL AUTHORITY AS REQUESTED

BY TYPE OF FACILITY
($ THOUSANDS)

DATA AS OF FEB 1995

INSTALLATION	LOCATION	PROJECT	TOTAL
HOMEOWNERS ASSISTINCE			
		PAYMENT TO HOMEOWNERS	11,097
		OTHER OPERATING COSTS	31,004
		ACQUISITION OF REAL PROPERTY	124,239
HOMEOWNERS ASSISTANCE			166,340
GRAND TOTAL FAMILY HOUSING			4,465,524